Larson Electronics LLC
9419 E US HWY 175, Kemp, TX 75143
Phone: 800.369.6671

www.LarsonElectronics.com
Email: sales@LarsonElectronics.com
Fax: 903.498.3364

LM-30-3S-SP3000

Replacement Mast Catcher / Supporting Arm for LM-30-3S Series Light Masts

Product ID: 235042

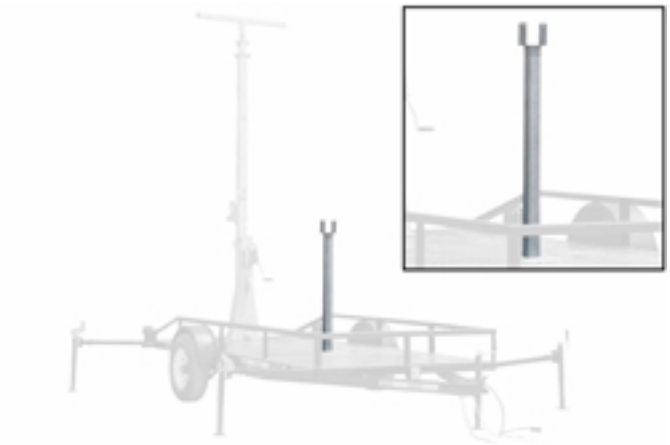

Larson Electronics LLC manufactures a wide variety of products, including custom built to spec designs. The pictures displayed for this unit are a general representation of form factor for the product line and may not accurately represent this exact configuration in every detail due to custom builds and changes between similar products in our standard catalog. The specifics for this configuration are listed in the specification table and supporting documentation (CAD files, Dimensional Drawing, Name Plate Diagram, Wiring Diagram, etc.). This means that specific details (receptacles, plugs, wires, connections, mounting brackets, external finishes, etc.) may not be accurately represented in images vs specifications. Please review specifications and do not order based solely on images.

The LM-30-3S-SP3000 from Larson Electronics is a Replacement Mast Catcher / Supporting Arm for the LM-30-3S series of light masts.
The LM-30-3S-SP3000 supports the unit when it is folded over for extended periods of time. It also secures the mast in place on trailers and other mobile installations during transit and prevents the mast from undesired movement during transportation. It is also ideal for stationary installations during long periods of down time and during servicing.
The LM-30-3S-SP3000 can be used to replace damaged, broken, missing, or otherwise compromised supporting arms on existing LM-30-3S series light masts.

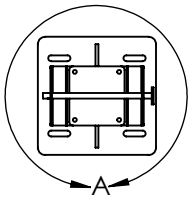

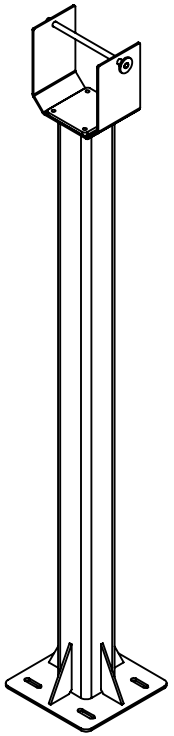

DETAIL A
SCALE 1 : 3.5

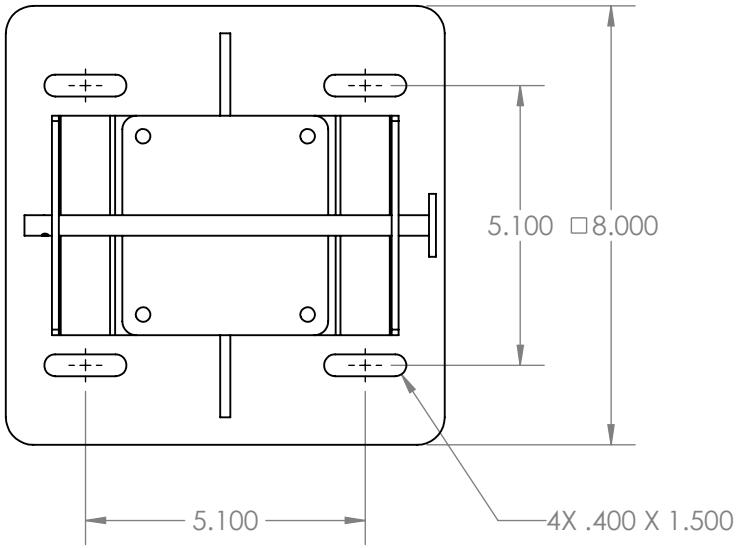

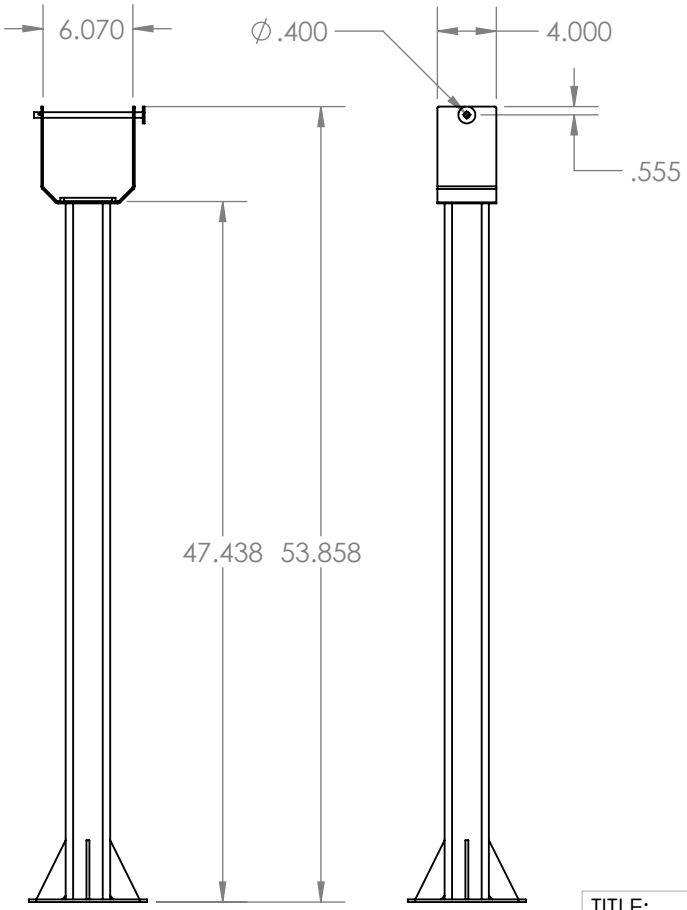

LARSON ELECTRONICS

TITLE:

LM-20-3S-SP3000, LM-30-3S-SP3000

	NAME
DRAWN	RC
CHECKED	N/A
DATE	2/24/2025

SIZE	DWG. NO.	REV
A		

SCALE: NTS | SHEET 1 OF 1

PROPRIETARY AND CONFIDENTIAL
THE INFORMATION CONTAINED IN THIS DRAWING IS THE SOLE PROPERTY OF LARSON ELECTRONICS LLC. ANY REPRODUCTION IN PART OR AS A WHOLE WITHOUT THE WRITTEN PERMISSION OF LARSON ELECTRONICS LLC IS PROHIBITED.

UNLESS OTHERWISE NOTED:

Angle	+/- .5 deg
.X	+/- .02
.XX	+/- .01
.XXX	+/- .005

DO NOT SCALE DRAWING

Frequently Asked Questions (FAQ)