Larson Electronics LLC
9419 E US HWY 175, Kemp, TX 75143
Phone: 800.369.6671

www.LarsonElectronics.com
Email: sales@LarsonElectronics.com
Fax: 903.765.7664

EPF-RME-16-0.25HP

16" Explosion Proof Exhaust Fan - 2,950 CFM - 1/4 HP, 115V AC 1PH - Roof Mounted

Product ID: 223916



Image: EPF-RME-16-0.25HP

Larson Electronics LLC manufactures a wide variety of products, including custom built to spec designs. The pictures displayed for this unit are a general representation of form factor for the product line and may not accurately represent this exact configuration in every detail due to custom builds and changes between similar products in our standard catalog. The specifics for this configuration are listed in the specification table and supporting documentation (CAD files, Dimensional Drawing, Name Plate Diagram, Wiring Diagram, etc.). This means that specific details (receptacles, plugs, wires, connections, mounting brackets, external finishes, etc.) may not be accurately represented in images vs specifications. Please review specifications and do not order based solely on images.

EPF-RME-16-0.25HP Explosion Proof Ventilation Fan
Listing: United States
Type: Explosion Proof Roof Mounted Exhaust Fan
Propeller Dimensions: 16" Diameter
Overall Dimensions: 56.837"-L x 47.902"-W x 29.28"-H
Above Curb Dimensions: 33.56"-L x 33.56"-W x 26.52"-H
Mounting Flang Dimensions: 30.5"-L x 30.5"-W
Minimum Cutout Opening Dimensions: 20"-L x 20"-W
Fan Propeller Dimensions: 16" Diameter
Weight: -
Voltage: 115V AC Single Phase
Motor: 1/4 HP Fully Enclosed Explosion Proof
Rotations Per Minutes (RPM): 1,725
Peak CFM (@ 0" SP): 2,950
Max Sound Levels @ 5`: 17.6 (sones), 69.68 (db)
Materials: Galvanized Steel
Mounting: Roof/Ceiling Mount
Wiring: Hard-Wire

Ratings/Features:
Class I, Divisions 1&2 Group D
Class II, Divisions 1&2 Groups F,G
Rated for Hazardous Environments
Built-in Bird Screen

Special Orders - Special Requirements
Contact us for special requirements
Toll Free: 1-800-369-6671
Intl: 1-903-270-1187
Fax: 1-903-765-7664
E-mail: sales@larsonelectronics.com

The EPF-RME-16-0.25HP from Larson Electronics is an Explosion Proof Exhaust Fan for use in flammable environments. Equipped with a built-in bird screen, this unit operates on single-phase 115V AC. The 1/4 HP explosion proof fan is compatible with roof/ceiling

mounting applications.

The EPF-RME-16-0.25HP explosion proof fan is rated for Class I ,Group D and Class II, Groups F & G hazardous environments. This single-phase explosion proof industrial fan has a 1/4 horsepower fully enclosed motor that can spin the propeller at a rate of 1,725 RPM. Capable of achieving 2,950 CFM, the explosion proof exhaust fan features a built-in bird screen.

The explosion proof fan is constructed of non-sparking material, resulting in a lightweight unit. The 16" diameter propeller on this explosion proof exhaust fan resists sparking, further increasing the safety of the hazardous environment in which the fan is being utilized.

Voltage: The explosion proof ventilation fan can operate on single-phase 115V AC.

Wiring: The EPF-RME-16-0.25HP is a hard-wired ventilation fan that should be installed according to national, state and local electrical and mechanical codes.

Mounting: Operators may mount the fan on ceilings or roofing during installation.

Applications: Class I, Group D and Class II, Groups F & G hazardous areas that require ventilation including but not limited to the following: clean rooms, marijuana extraction rooms, laboratory hoods, oil refineries, grain mills, chemical plants, welding shops, chemical storage areas and battery changing areas.

At Larson Electronics, we do more than meet your lighting needs. We also provide replacement, retrofit, and upgrade parts as well as industrial grade power accessories. Our craftsmen can custom build any lighting system and/or accessories to fit the unique demands of your operation. A commitment to honesty, quality, and dependability has made Larson Electronics a leader in the lighting and electronics business since 1973. Contact us today at 800-369-6671 or message sales@larsonelectronics.com for more information about our custom options tailored to meet your specific industry needs.

Wiring Diagram

WARNING: *DO NOT SERVICE WHILE ENERGIZED!*

EPF-RME-16-0.25HP

Connect the motors of all fans according to the diagrams inside the terminal box cover or on the nameplate. **BE SURE TO CONNECT FOR THE VOLTAGE, FREQUENCY AND PHASE TO BE USED.**

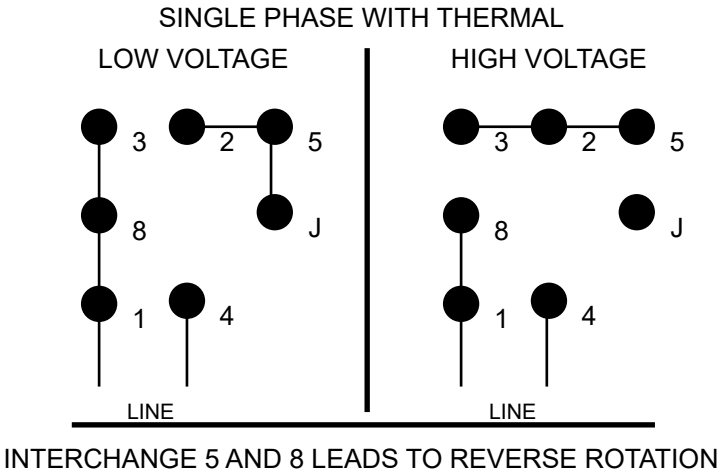

INTERCHANGE 5 AND 8 LEADS TO REVERSE ROTATION

Dual-voltage single phase motors are factory-connected for 230 volt lines. Dual-voltage three-phase motors are factory-connected for 460 volt lines. Provide Nationally Recognized Testing Laboratory recognized electrical overload protection not to exceed 125% of the marked input rating of the fan motor.

LARSON ELECTRONICS LLC • 9419 E US HWY 175 • KEMP, TX 75143
p: 1-800-369-6671 • intl: 903-498-3363 • f: 903-498-3364 • sales@larsonelectronics.com

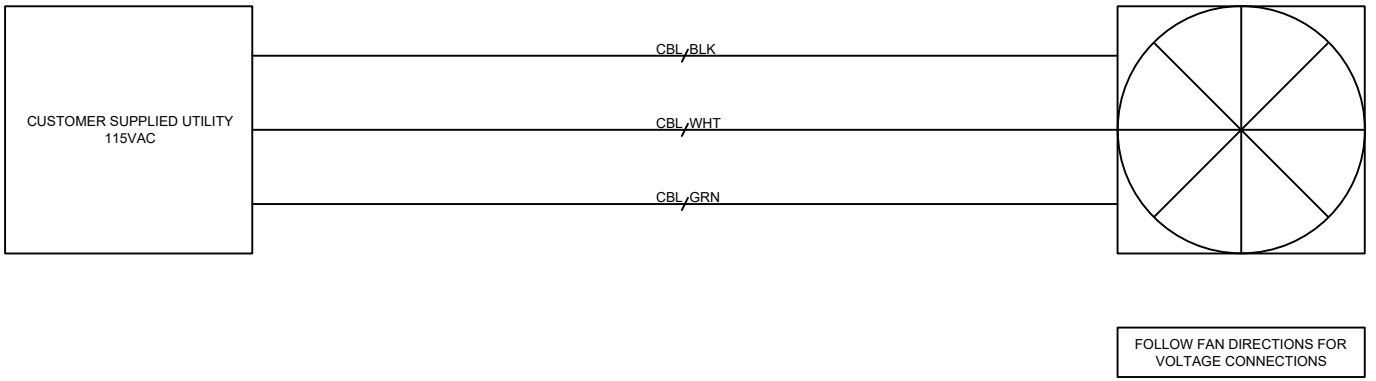

LARSON ELECTRONICS 9419 E US HWY 175, KEMP, TX 75143	TITLE: EPF-RME-16-0.25HP		
	DRAWN BY: R.BLACK	DATE: 01/28/2022	REV: A
	CHECKED BY: K.NGUYEN	SHEET #	DRAWING #: 101

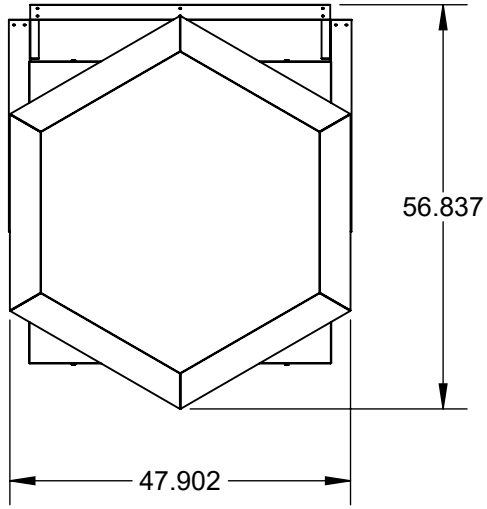

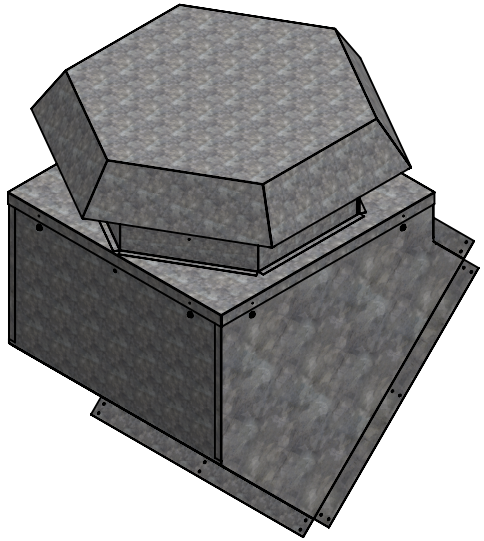

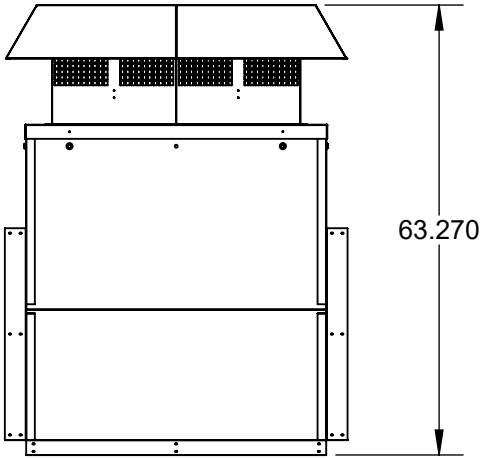

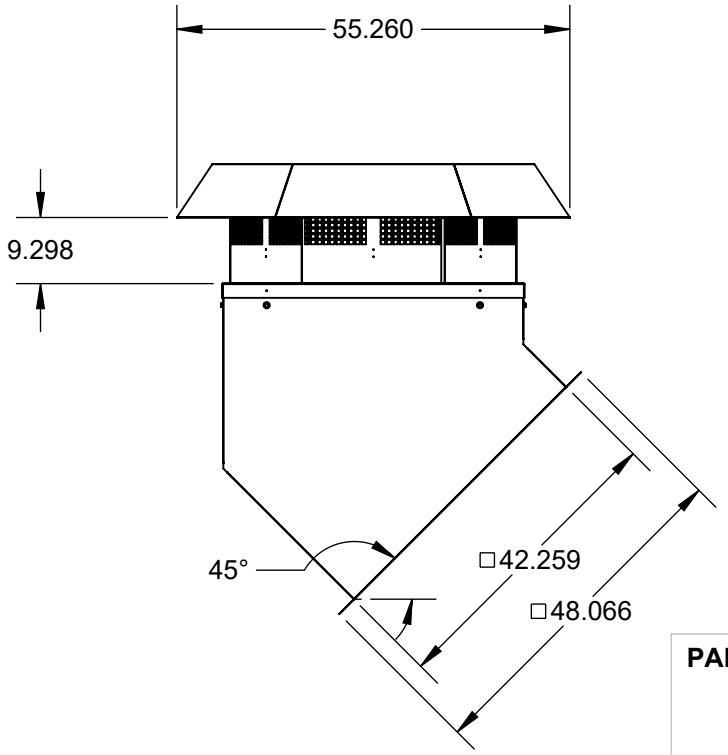

LARSON ELECTRONICS®

PART NUMBER:
EPF-RME-16-0.25HP

SIZE		REV
A		1

DIMENSIONS ARE IN INCHES				
DO NOT SCALE DRAWING	DATE	3/10/2026	SCALE: NTS	SHEET 1 OF 1

PROPRIETARY AND CONFIDENTIAL
THE INFORMATION CONTAINED IN THIS DRAWING IS THE SOLE PROPERTY OF LARSON ELECTRONICS LLC. ANY REPRODUCTION IN PART OR AS A WHOLE WITHOUT THE WRITTEN PERMISSION OF LARSON ELECTRONICS LLC IS PROHIBITED.

Larson Electronics LLC
9419 E US HWY 175, Kemp, TX 75143
Phone: 800.369.6671

www.LarsonElectronics.com
Email: sales@LarsonElectronics.com
Fax: 903.765.7664



Larson Electronics LLC
9419 E US HWY 175, Kemp, TX 75143
Phone: 800.369.6671

www.LarsonElectronics.com
Email: sales@LarsonElectronics.com
Fax: 903.765.7664



Larson Electronics LLC
9419 E US HWY 175, Kemp, TX 75143
Phone: 800.369.6671

www.LarsonElectronics.com
Email: sales@LarsonElectronics.com
Fax: 903.765.7664

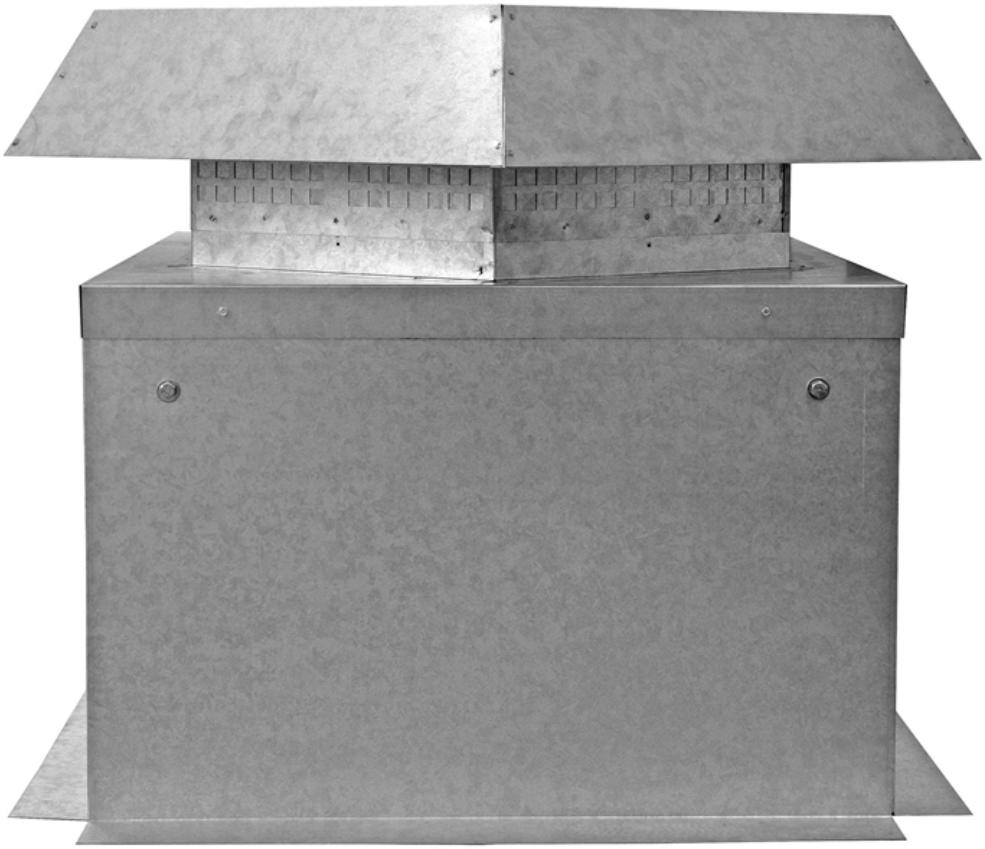

Certification

Manufacturer: Larson Electronics LLC
Address: 9419 US-HWY 175
Kemp, Texas 75143

Declare the following equipment conforms to the standard(s) as listed:

Model: EPF-RME Series
Description: Explosion Proof Roof Mounted Fans

Evaluated Listings:

- **UL:** PTDR.E312535 – NEC / United States standards for MOTORS FOR USE IN HAZARDOUS LOCATIONS
- **UL:** PTDR2.E312535 – NEC / United States standards for ELECTRIC MOTORS, MOTOR SUBASSEMBLIES AND MOTOR ACCESSORIES FOR USE IN HAZARDOUS LOCATIONS – COMPONENT
- **UL:** PTDR7.E312535 – CEC / Canada standards for MOTORS FOR USE IN HAZARDOUS LOCATIONS CERTIFIED FOR CANADA
- **UL:** PTDR8.E312535 – CEC / Canada standards for ELECTRIC MOTORS, MOTOR SUBASSEMBLIES AND MOTOR ACCESSORIES FOR USE IN HAZARDOUS LOCATIONS CERTIFIED FOR CANADA – COMPONENT

The EPF-RME Series is certified to NEC and CEC standards hazardous locations for:

- NEC: Class I, Divisions 1 & 2, Groups C, D; Class II, Divisions 1 & 2, Groups E, F, G
- CEC: Class I, Divisions 1 & 2, Groups C, D; Class II, Divisions 1 & 2, Groups E, F, G

The EPF-RME Series is comprised of a Bluffton explosion proof motor. This motor is custom mounted to the fan cage and non sparking fan propeller assembly. The fan assembly is mounted to a galvanized enclosure structure for roof mounting. The fan assembly may be equipped with cord or controls. This assembly is built to NEC and CEC standards for hazardous locations.

Signed for and on behalf of: Larson Electronics, LLC
Place of issue: Kemp, TX

Signature: James Thomas

Name: James Thomas
Position: Operations Manager

LARSON ELECTRONICS LLC • 9419 E US HWY 175 • KEMP, TX 75143
p: 1-800-369-6671 • intl: 903-498-3363 • f: 903-498-3364 • sales@larsonelectronics.com

intertek
Total Quality. Assured.



<- Back

Product Description

Title:	INDUSTRIAL CONTROL PANELS
Company:	LARSON ELECTRONICS LLC - Kemp, TX USA
Product Information:	Industrial Control Panels For General Use.
Evaluated to the following:	A representative sample of the listed devices have been tested, investigated and found to comply with the requirements of the Standard(s) for Industrial Control Panels (UL-508A) and are identified with the ETL Listed Mark.

<- Back

Contact Us

ETL listed products that are in doubt or for products that do not appear in the directory, please request a verification of certification.
Americas+1-888-347-5478 (or +1-847-660-7407)
Email etldirectory@intertek.com

Intertek Home
Product Directories
DLP on mobile devices

Inspector Center

Get up-to-date information on everything from our Accreditations to our Certifications and Marks. Learn more...

News

Intertek Unveils New Design for Product Safety and Quality Certification Marks. Learn more...

© 2010 Intertek All Rights Reserved.
All other product or service names are the property of their respective owners.

intertek
Total Quality. Assured.



<- Back

Product Description

Title:	EXPLOSION-PROOF & DUST IGNITION-PROOF ELECTRICAL EQUIPMENT FOR USE IN HAZARDOUS (CLASSIFIED) LOCATIONS
Company:	LARSON ELECTRONICS LLC - Kemp, TX USA
Product Information:	Explosion-proof or dust-ignition-proof Industrial Control Panels for use in Hazardous (Classified) Locations, Model Nos. Custom Industrial Control Panels
Evaluated to the following:	A representative sample of the listed devices have been tested, investigated and found to comply with the requirements of the Standard(s) for Explosion-Proof and Dust Ignition-Proof Electrical Equipment for Use in Hazardous (Classified) Locations (UL-1203) and are identified with the ETL Listed Mark.

<- Back

Contact Us

ETL listed products that are in doubt or for products that do not appear in the directory, please request a verification of certification.
Americas+1-888-347-5478 (or +1-847-660-7407)
Email
etldirectory@intertek.com

Intertek Home
Product Directories
DLP on mobile devices

Inspector Center

Get up-to-date information on everything from our Accreditations to our Certifications and Marks. Learn more...

News

Intertek Unveils New Design for Product Safety and Quality Certification Marks. Learn more...

© 2010 Intertek All Rights Reserved.
All other product or service names are the property of their respective owners.

intertek
Total Quality. Assured.

<- Back

Product Description

Title:	INDUSTRIAL CONTROL EQUIPMENT
Company:	LARSON ELECTRONICS LLC - Kemp, TX USA
Product Information:	Industrial Control Panels For General Use. Industrial Control Panels Relating to Hazardous (Classified) Locations, Custom Industrial Control Panels. Power Distribution System, Model Nos. MGL, MPD, MGS series; Followed by AAK-PBB.FFF-SCC.GGG-EEXCCC.DDD; Where AA = 2,3,5,7,9,15,20,25,30,45,50,75; BB = 1P, 3P; FFF = 480,240,208,120; CC = 1P,3P; GGG = 480,240,208,120; EE = # of outlets; CCC = voltage; DDD = outlet amperage.
Evaluated to the following:	A representative sample of the listed devices have been tested, investigated and found to comply with the requirements of the Standard(s) for Industrial Control Equipment (CAN/CSA-C22.2 No. 14) and are identified with the cETL Listed Mark.

<- Back

Contact Us

ETL listed products that are in doubt or for products that do not appear in the directory, please request a verification of certification.
Americas+1-888-347-5478 (or +1-847-660-7407)
Email
etldirectory@intertek.com

Intertek Home
Product Directories
DLP on mobile devices

Inspector Center

Get up-to-date information on everything from our Accreditations to our Certifications and Marks. Learn more...

News

Intertek Unveils New Design for Product Safety and Quality Certification Marks. Learn more...

© 2010 Intertek All Rights Reserved.
All other product or service names are the property of their respective owners.

intertek
Total Quality. Assured.

<- Back

Product Description

Title:	ENCLOSURES
Company:	LARSON ELECTRONICS LLC - Kemp, TX USA
Product Information:	Explosion-proof or dust-ignition-proof Industrial Control Panels for use in Hazardous (Classified) Locations, Model Nos. Custom Industrial Control Panels Luminaires, Model Nos. EPL-48-2L-LED-SFC, EPL-24-2L-LED-SFC. for use in Hazardous Locations: Class I, Div. 1, Groups C and D T5 or T6 -20°C < Tamb < 40°C Class II, Div. 1., Groups E, F, and G; Class III Div.1 T3B -20°C < Tamb < 40°C
Evaluated to the following:	A representative sample of the listed devices have been tested, investigated and found to comply with the requirements of the Standard(s) for Enclosures for use in Class II, Groups E, F, G Hazardous Locations (CAN/CSA-C22.2 No. 25) and are identified with the cETL Listed Mark.

<- Back

Contact Us

ETL listed products that are in doubt or for products that do not appear in the directory, please request a verification of certification.
Americas+1-888-347-5478 (or +1-847-660-7407)
Email etldirectory@intertek.com

Intertek Home
Product Directories
DLP on mobile devices

Inspector Center

Get up-to-date information on everything from our Accreditations to our Certifications and Marks. Learn more...

News

Intertek Unveils New Design for Product Safety and Quality Certification Marks. Learn more...

© 2010 Intertek All Rights Reserved.
All other product or service names are the property of their respective owners.

intertek
Total Quality. Assured.



<- Back

Product Description

Title:	EXPLOSION-PROOF ENCLOSURES FOR USE IN CLASS I HAZARDOUS LOCATIONS
Company:	LARSON ELECTRONICS LLC - Kemp, TX USA
Product Information:	Explosion-proof or dust-ignition-proof Industrial Control Panels for use in Hazardous (Classified) Locations, Model Nos. Custom Industrial Control Panels
Evaluated to the following:	A representative sample of the listed devices have been tested, investigated and found to comply with the requirements of the Standard(s) for Explosion-Proof Enclosures for Use in Class I Hazardous Locations (CAN/CSA-C22.2 No. 30) and are identified with the cETL Listed Mark.

<- Back

Contact Us

ETL listed products that are in doubt or for products that do not appear in the directory, please request a verification of certification.
Americas+1-888-347-5478 (or +1-847-660-7407)
Email
etldirectory@intertek.com

Intertek Home
Product Directories
DLP on mobile devices

Inspector Center

Get up-to-date information on everything from our Accreditations to our Certifications and Marks. Learn more...

News

Intertek Unveils New Design for Product Safety and Quality Certification Marks. Learn more...

© 2010 Intertek All Rights Reserved.
All other product or service names are the property of their respective owners.

Material Safety Data Sheet

To Whom It May Concern,

The Larson Electronics LLC EPF industrial line of fans for hazardous locations are considered "ARTICLES" under 29 CFR 1910-1200, the OSHA Hazard Communication Standard, and do not require a Material Safety Data Sheet (MSDS). This document does not expire.

Articles are specifically exempt from the regulations of this standard. OSHA defines an article as follows:

1910-1200(c) – Article means a manufactured item other than a fluid or particle:

i. Which is formed to a specific shape or design during manufacture;
ii. Which has end use function(s) dependent in whole or in part upon its shape or design during end use; and
iii. Which under normal conditions does not release more than very small quantities.

The "hazardous location" and "explosion proof" are terminology for the environment where these products will be installed. This is not to be confused with "hazardous materials;" this product does not contain any hazardous materials.

Regards,

Ray Smith
Larson Electronics, LLC.

LARSON ELECTRONICS LLC • 9419 E US HWY 175 • KEMP, TX 75143
p: 1-800-369-6671 • intl: 903-498-3363 • f: 903-498-3364 • sales@larsonelectronics.com

UL Product iQ™

PTDR.E312535 - Motors for Use in Hazardous Locations

Motors for Use in Hazardous Locations

See General Information for Motors for Use in Hazardous Locations

BLUFFTON MOTOR WORKS L L C, A SUBSIDIARY OF WEG ELECTRIC CORP E312535
410 E SPRING ST
BLUFFTON, IN 46714-3737 USA
Class I, Groups Cand D; Class II, Groups E, F and G.

Also Class I, Groups C and D; Class II, Groups E, F and G motors with labeled brakes. The brakes in these explosion-proof and dust-ignition proof assemblies are intended essentially for holding purposes and may be used for stopping light inertia loads.

Trademark and/or Tradename: "E312535", "Bluffton Motor Works", "WEG", "WEG Commercial Motors",

Last Updated on 2018-07-17

The appearance of a company's name or product in this database does not in itself assure that products so identified have been manufactured under UL's Follow-Up Service. Only those products bearing the UL Mark should be considered to be Certified and covered under UL's Follow-Up Service. Always look for the Mark on the product.

UL permits the reproduction of the material contained in the Online Certification Directory subject to the following conditions: 1. The Guide Information, Assemblies, Constructions, Designs, Systems, and/or Certifications (files) must be presented in their entirety and in a non-misleading manner, without any manipulation of the data (or drawings). 2. The statement "Reprinted from the Online Certifications Directory with permission from UL" must appear adjacent to the extracted material. In addition, the reprinted material must include a copyright notice in the following format: "© 2020 UL LLC"

UL Product iQ™

PTDR2.E312535 - Electric Motors, Motor Subassemblies and Motor Accessories for Use in Hazardous Locations - Component

Electric Motors, Motor Subassemblies and Motor Accessories for Use in Hazardous Locations - Component

See General Information for Electric Motors, Motor Subassemblies and Motor Accessories for Use in Hazardous Locations - Component

BLUFFTON MOTOR WORKS L L C, A SUBSIDIARY OF WEG ELECTRIC CORP E312535
410 E SPRING ST
BLUFFTON, IN 46714-3737 USA
Class I, Group D.

Electric motor subassemblies, Frame 48, Model Nos. 4421007425, 4421007427, 4421007428, 4421007435 and 4421007436; Rotor Part Nos. 260447904, 260447905 and 262722914.

Conditions of Acceptability:

1. The acceptability of these devices with a specific end product is dependent upon the addition of drive-end endshield or pump housing and an opposite drive end endshield to complete the explosion-proof enclosure.

Additional Conditions of Acceptability may be included in the Report available from the manufacturer.

Marking: Company name, Tradename or trademark "Bluffton Motor Works", "WEG", "WEG Commercial Motors", BLUFFTON MOTOR WORKS , WEG product identification electrochemically etched on the stator and the Recognized Component Mark .
Additional markings may be included in the Report available from the manufacturer.

Last Updated on 2018-07-17

The appearance of a company's name or product in this database does not in itself assure that products so identified have been manufactured under UL's Follow-Up Service. Only those products bearing the UL Mark should be considered to be Certified and covered under UL's Follow-Up Service. Always look for the Mark on the product.

UL permits the reproduction of the material contained in the Online Certification Directory subject to the following conditions: 1. The Guide Information, Assemblies, Constructions, Designs, Systems, and/or Certifications (files) must be presented in their entirety and in a non-misleading manner, without any manipulation of the data (or drawings). 2. The statement "Reprinted from the Online Certifications Directory with permission from UL" must appear adjacent to the extracted material. In addition, the reprinted material must include a copyright notice in the following format: "© 2020 UL LLC"

UL Product iQ™

PTDR7.E312535 - Motors for Use in Hazardous Locations Certified for Canada

Motors for Use in Hazardous Locations Certified for Canada

See General Information for Motors for Use in Hazardous Locations Certified for Canada

BLUFFTON MOTOR WORKS L L C, A SUBSIDIARY OF WEG ELECTRIC CORP E312535
410 E SPRING ST
BLUFFTON, IN 46714-3737 USA
Class I, Groups C and D; Class II, Groups E, F and G.

Also Class I, Groups C and D; Class II, Groups E, F and G motors with labeled brakes. The brakes in these explosion-proof and dust-ignition proof assemblies are intended essentially for holding purposes and may be used for stopping light inertia loads.

Trademark and/or Tradename: "E312535", "Bluffton Motor Works", "WEG", "WEG Commercial Motors",

Last Updated on 2018-07-17

The appearance of a company's name or product in this database does not in itself assure that products so identified have been manufactured under UL's Follow-Up Service. Only those products bearing the UL Mark should be considered to be Certified and covered under UL's Follow-Up Service. Always look for the Mark on the product.

UL permits the reproduction of the material contained in the Online Certification Directory subject to the following conditions: 1. The Guide Information, Assemblies, Constructions, Designs, Systems, and/or Certifications (files) must be presented in their entirety and in a non-misleading manner, without any manipulation of the data (or drawings). 2. The statement "Reprinted from the Online Certifications Directory with permission from UL" must appear adjacent to the extracted material. In addition, the reprinted material must include a copyright notice in the following format: "© 2020 UL LLC"

UL Product iQ™

PTDR8.E312535 - Electric Motors, Motor Subassemblies and Motor Accessories for Use in Hazardous Locations Certified for Canada - Component

Electric Motors, Motor Subassemblies and Motor Accessories for Use in Hazardous Locations Certified for Canada - Component

See General Information for Electric Motors, Motor Subassemblies and Motor Accessories for Use in Hazardous Locations Certified for Canada - Component

BLUFFTON MOTOR WORKS L L C, A SUBSIDIARY OF WEG ELECTRIC CORP E312535
410 E SPRING ST
BLUFFTON, IN 46714-3737 USA
Class I, Group D.

Electric motor subassemblies, Frame 48, Models 4421007425, 4421007427, 4421007428, 4421007435 and 4421007436; Rotor Part Nos. 260447904, 260447905 and 262722914.

Conditions of Acceptability:

1. The acceptability of these devices with a specific end product is dependent upon the addition of drive-end endshield or pump housing and opposite drive end endshield to complete the explosion-proof enclosure.

Additional Conditions of Acceptability may be included in the Report available from the manufacturer.

Marking: Company name, Tradename or trademark "Bluffton Motor Works", "WEG", "WEG Commercial Motors", BLUFFTON MOTOR WORKS , WEG and model designation electrochemically etched on the stator and the Recognized Component Mark for Canada c UL us .

Additional markings may be included in the Report available from the manufacturer.

Last Updated on 2018-07-17

The appearance of a company's name or product in this database does not in itself assure that products so identified have been manufactured under UL's Follow-Up Service. Only those products bearing the UL Mark should be considered to be Certified and covered under UL's Follow-Up Service. Always look for the Mark on the product.

UL permits the reproduction of the material contained in the Online Certification Directory subject to the following conditions: 1. The Guide Information, Assemblies, Constructions, Designs, Systems, and/or Certifications (files) must be presented in their entirety and in a non-misleading manner, without any manipulation of the data (or drawings). 2. The statement "Reprinted from the Online Certifications Directory with permission from UL" must appear adjacent to the extracted material. In addition, the reprinted material must include a copyright notice in the following format: "© 2020 UL LLC"

Certification

Manufacturer: Larson Electronics LLC
Address: 9419 US-HWY 175
Kemp, Texas 75143

Declare the following equipment conforms to the standard(s) as listed:

Model: EPF-RME Series
Description: Explosion Proof Roof Mounted Fans

Evaluated Listings:

CE: DIRECTIVE 2014/35/EU - LOW VOLTAGE DIRECTIVE
CE: DIRECTIVE 2014/30/EU - EMC DIRECTIVE
CE: Regulation (EC) No 1907/2006 - REACH REGULATION
CE: DIRECTIVE 2015/863/EU - ROHS DIRECTIVE

The EPF-RME series complies with the essential protection requirements of the European Parliament of the Council Directive for Low Voltage Directive, EMC Directive, REACH Regulation, and RoHS Directive. This certification applies to all specimens manufactured in accordance to the manufacture's drawings.

Signed for and on behalf of: Larson Electronics, LLC
Place of issue: Kemp, TX

Signature: James Thomas

Name: James Thomas
Position: Operations Manager

LARSON ELECTRONICS LLC • 9419 E US HWY 175 • KEMP, TX 75143
p: 1-800-369-6671 • intl: 903-498-3363 • f: 903-498-3364 • sales@larsonelectronics.com

Certification

Manufacturer: Larson Electronics LLC
Address: 9419 US-HWY 175
Kemp, Texas 75143

Declare the following equipment conforms to the standard(s) as listed:

Model: EPF-RME Series
Description: Explosion Proof Roof Mounted Fans

Evaluated Listings:

CE: DIRECTIVE 2015/863/EU - ROHS DIRECTIVE

This is to certify that products offered by Larson Electronics LLC comply with the Reduction of Hazardous Substances (RoHS) directives. Directive 2002/95/EC became effective on 1 July 2006. It restricts the use of six substances in the manufacture of electrical and electronic equipment. This directive was revised in June 2011 and is now referred to as directive 2011/65/EU. Directive 2015/863/EU amending Annex II to Directive 2011/65/EU announced plans to add four substances from 22 July 2019.

We hereby certify that the equipment specified above conforms to the Directive(s) by containing less of the restricted substances than the stated limits.

Signed for and on behalf of: Larson Electronics, LLC
Place of issue: Kemp, TX

Signature: James Thomas

Name: James Thomas
Position: Operations Manager

LARSON ELECTRONICS LLC • 9419 E US HWY 175 • KEMP, TX 75143
p: 1-800-369-6671 • intl: 903-498-3363 • f: 903-498-3364 • sales@larsonelectronics.com

Certification

Manufacturer: Larson Electronics LLC
Address: 9419 US-HWY 175
Kemp, Texas 75143

Declare the following equipment conforms to the standard(s) as listed:

Model: EPF-RME Series
Description: Explosion Proof Roof Mounted Fans

Evaluated Listings:

CE: Regulation (EC) No 1907/2006 - REACH REGULATION

This letter establishes the opinion of Larson Electronics LLC regarding the status, under the current European Union ("EU") Regulations on Registration, Evaluation, Authorization, and Restriction of Chemical Substances ("REACH").

REACH does not apply to manufactured products which are referred to as "completed articles". Substances (chemicals) are subject to REACH registration, NOT products.

In addition, Articles are exempt from the REACH requirements if (a) the Article does not contain a substance of very high concern or candidate substance in an amount exceeding 0.1% weight by weight, and (b) if substances present in the Article in excess of 1 ton per year per importer are not expected nor intended to be released.

Based on communication with our raw material suppliers, we conclude that to the best of our knowledge our products requiring REACH compliance do not contain any of the currently listed SVHC in concentrations of 0.1% or above.

Accordingly, we foresee no registration or pre-registration requirement for the products we supply.

Signed for and on behalf of: Larson Electronics, LLC
Place of issue: Kemp, TX

Signature: James Thomas

Name: James Thomas
Position: Operations Manager

LARSON ELECTRONICS LLC • 9419 E US HWY 175 • KEMP, TX 75143
p: 1-800-369-6671 • intl: 903-498-3363 • f: 903-498-3364 • sales@larsonelectronics.com

Larson Electronics LLC
9419 E US HWY 175, Kemp, TX 75143
Phone: 800.369.6671

www.LarsonElectronics.com
Email: sales@LarsonElectronics.com
Fax: 903.765.7664

Frequently Asked Questions (FAQ)

There are no Faqs