Larson Electronics LLC
9419 E US HWY 175, Kemp, TX 75143
Phone: 800.369.6671

www.LarsonElectronics.com
Email: sales@LarsonElectronics.com
Fax: 903.498.3364

VMP-AM-FSD-F350-2018

Antenna Mounting Plate - 2018 Ford Superduty F350 Aluminum Trucks - NO Drilling Required

Product ID: 223324



Larson Electronics LLC manufactures a wide variety of products, including custom built to spec designs. The pictures displayed for this unit are a general representation of form factor for the product line and may not accurately represent this exact configuration in every detail due to custom builds and changes between similar products in our standard catalog. The specifics for this configuration are listed in the specification table and supporting documentation (CAD files, Dimensional Drawing, Name Plate Diagram, Wiring Diagram, etc.). This means that specific details (receptacles, plugs, wires, connections, mounting brackets, external finishes, etc.) may not be accurately represented in images vs specifications. Please review specifications and do not order based solely on images.

VMP-AM-FSD-F350-2018 Mounting Plate for Antennas

Type: Mounting Plate
Compatible Truck Models: 2018 Ford Superduty F350
Frame Material: Aluminum
Mounting Plate Material: Aluminum
Bracket Material: Aluminum
Weight: 3 lbs
Windload: Highway Speeds
Weight Capacity: 20 lbs
Installation: Via Rear Cab Lights
Seal: Weatherproof
Compatible Spotlights: Any Permanent Mount Antenna of up to 20 lbs

Ratings/Features:

Durable Construction
Aluminum Mounting Plate & Bracket
Works with Most Antennas
Weatherproof Seal
Made in the USA

Special Orders- Requirements

Contact us for special requirements
Toll Free: 1-800-369-6671
Intl: 1-903-270-1187
E-mail: sales@larsonelectronics.com

PLEASE NOTE: BEFORE CALLING TO ORDER, YOU WILL NEED TO KNOW YOUR VEHICLE'S YEAR, MAKE, MODEL, AND IF YOUR VEHICLE HAS AN INCANDESCENT OR LED THIRD BRAKE LIGHT. THERE IS NOTHING WE CAN LOOK UP TO HELP YOU DETERMINE THIS. YOU NEED TO LOOK AT THE LIGHT AND SEE IF THERE ARE LITTLE ROUND BULBS (INCANDESCENT) OR LITTLE SQUARE LED CHIPS. WE CANNOT FINISH YOUR ORDER WITHOUT THIS INFORMATION. VERIFY LAMP TYPE BEFORE CALLING.

Made in Texas

The VMP-AM-FSD-F350-2018 from Larson Electronics is a Permanent Antenna Mounting Plate that allows operators to install up to four antennas on their 2018 Ford Superduty F350 aluminum body pickup trucks without drilling any holes. This antenna mounting plate is ideal for law enforcement, DOT workers and anyone else who needs to easily mount an antenna, but doesn`t want to drill holes in their truck. This lightweight mounting plate allows operators to mount antennas on their trucks without drilling into the body of the truck itself. This mounting

plate can support antenna arrays of up to 20 lbs. The VMP-AM-FSD-F350-2018 features four predrilled 1/2" holes for antenna mounting and is compatible with 2018 Ford Superduty F350 aluminum body pickup trucks.
PLEASE NOTE: BEFORE CALLING TO ORDER, YOU WILL NEED TO KNOW YOUR VEHICLE`S YEAR, MAKE, MODEL, AND IF YOUR VEHICLE HAS AN INCANDESCENT OR LED THIRD BRAKE LIGHT. THERE IS NOTHING WE CAN LOOK UP TO HELP YOU DETERMINE THIS. YOU NEED TO LOOK AT THE LIGHT AND SEE IF THERE ARE LITTLE ROUND BULBS (INCANDESCENT) OR LITTLE SQUARE LED CHIPS. WE CANNOT FINISH YOUR ORDER WITHOUT THIS INFORMATION. VERIFY LAMP TYPE BEFORE CALLING.*



Click image to Enlarge



Click image to Enlarge

The VMP-AM-FSD-F350-2018 is constructed in Texas from durable aluminum for the frame, brackets and the mounting plate surface. This mounting plate has been designed for 2018 Ford Superduty F350 aluminum body pickup trucks and offers operators a sturdy and reliable platform to deploy permanent mount CB antennas, radio antennas and antennas from other equipment on the top of their truck for optimal performance. The VMP-AM-FSD-F350-2018 is installed via the rear cab lights and has a weatherproof seal on the back side for secure, dry installation and protection against scrapes to the body of the truck. The mounting plate requires absolutely no drilling for installation and is powder coated for added durability, can support up to 20 lbs and is offered in a black, white, or grey finish. The VMP-AM-FSD-F350-2018 also features a windload okay for highway speeds. (User provided equipment may vary.)
PLEASE NOTE: BEFORE CALLING TO ORDER, YOU WILL NEED TO KNOW YOUR VEHICLE`S YEAR, MAKE, MODEL, AND IF YOUR VEHICLE HAS AN INCANDESCENT OR LED THIRD BRAKE LIGHT. THERE IS NOTHING WE CAN LOOK UP TO HELP YOU DETERMINE THIS. YOU NEED TO LOOK AT THE LIGHT AND SEE IF THERE ARE LITTLE ROUND BULBS (INCANDESCENT) OR LITTLE SQUARE LED CHIPS. WE CANNOT FINISH YOUR ORDER WITHOUT THIS INFORMATION. VERIFY LAMP TYPE BEFORE CALLING.*
Installation of Lights/Equipment: The VMP-AM-FSD-F350-2018 comes predrilled with four 1/2" holes that allow for the secure mounting of various antennas. Depending on the number of holes required for mounting various types of antennas, this mounting plate can hold up to four antennas. Then the entire assembly can be mounted to the truck via the third brake light as explained below.
Truck Installation: The VMP-AM-FSD-F350-2018 is easy to install and requires absolutely NO drilling to mount to the truck. This mounting plate installs via the 3rd brake light on 2018 Ford Superduty F350 aluminum body pickup trucks between the body of the truck cab and the light. Operators simply remove their 3rd brake light, position the mounting plate bracket and reinstall the light through the bracket.
Having a reverse camera in the third 3rd brake light (NOT in the tailgate or bumper) will change the mounting bracket design. Those with a camera must choose the "camera" option in order to get the correct design. Please choose the appropriate option below.
***Please note that the VMP-AM-FSD-F350-2018 is designed for trucks with incandescent 3rd brake lights ONLY. Operators with LED 3rd brake lights will require the VMP-AM-FSD-F350-2018-LED. Incandescent mounting**

plates and LED mounting plates are NOT interchangeable.*

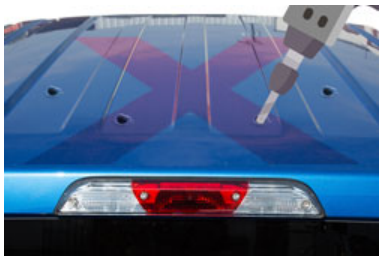

Aluminum Body



VMP-AM-FSD-F350-2018 Aluminum Plate For Mounting Permanent Mount Antennas

Applications: Hunting, fishing, off-roading, property management, security, search and rescue, farming operations, law enforcement, DOT and any other applications for which a roof mounted antenna is needed for 2018 Ford Superduty F350 aluminum body pickup truck owners.
PLEASE NOTE: BEFORE CALLING TO ORDER, YOU WILL NEED TO KNOW YOUR VEHICLE`S YEAR, MAKE, MODEL, AND IF YOUR VEHICLE HAS AN INCANDESCENT OR LED THIRD BRAKE LIGHT. THERE IS NOTHING WE CAN LOOK UP TO HELP YOU DETERMINE THIS. YOU NEED TO LOOK AT THE LIGHT AND SEE IF THERE ARE LITTLE ROUND BULBS (INCANDESCENT) OR LITTLE SQUARE LED CHIPS. WE CANNOT FINISH YOUR ORDER WITHOUT THIS INFORMATION. VERIFY LAMP TYPE BEFORE CALLING.

At Larson Electronics, we do more than meet your lighting needs. We also provide replacement, retrofit, and upgrade parts as well as industrial grade power accessories. Our craftsmen can custom build any lighting system and/or accessories to fit the unique demands of your operation. A commitment to honesty, quality, and dependability has made Larson Electronics a leader in the lighting and electronics business since 1973. Contact us today at 800-369-6671 or message sales@larsonelectronics.com for more information about our custom options tailored to meet your specific industry needs.

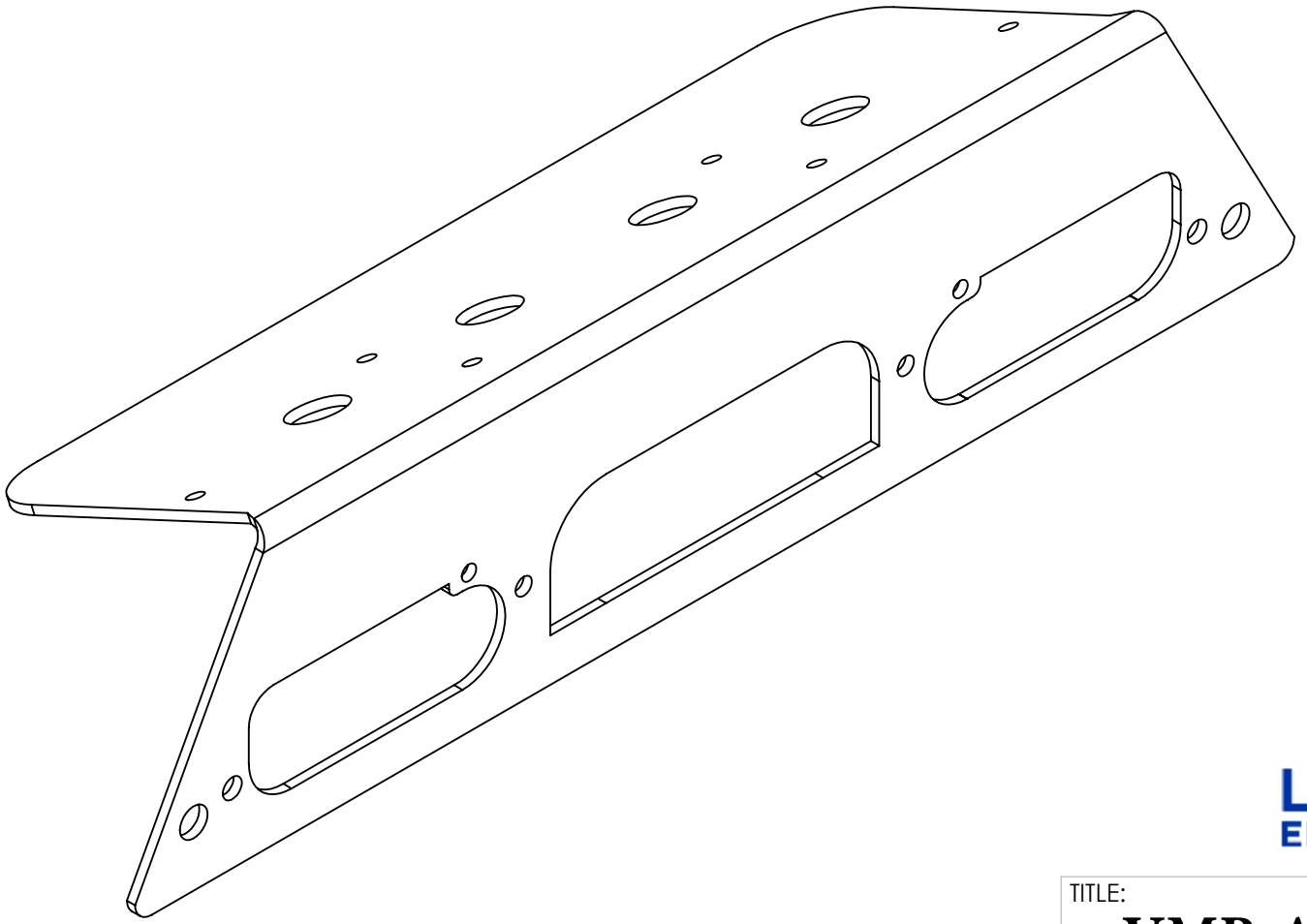

LARSON ELECTRONICS

TITLE:

VMP-AM-FSD-F350-2018

SIZE	DWG. NO.	REV
A		A

DIMENSIONS ARE IN INCHES			SCALE: NTS	
DO NOT SCALE DRAWING	DATE	3/29/2018		SHEET 1 OF 3

PROPRIETARY AND CONFIDENTIAL

THE INFORMATION CONTAINED IN THIS DRAWING IS THE SOLE PROPERTY OF LARSON ELECTRONICS LLC. ANY REPRODUCTION IN PART OR AS A WHOLE WITHOUT THE WRITTEN PERMISSION OF LARSON ELECTRONICS LLC IS PROHIBITED.

5 4 3 2 1

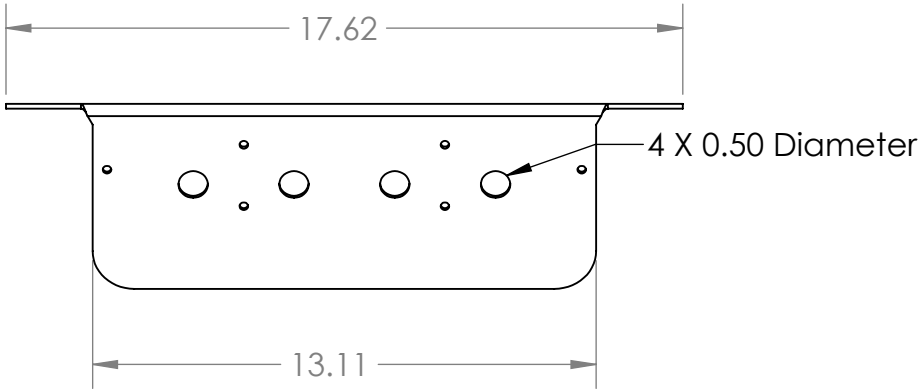

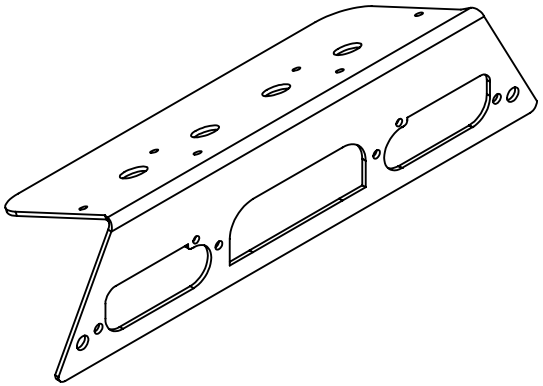

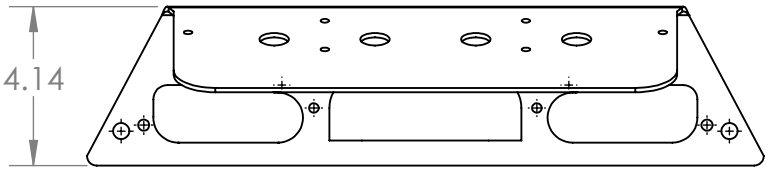

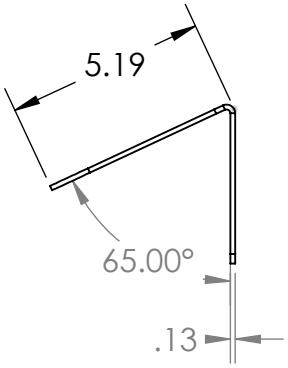

LARSON ELECTRONICS

TITLE:

VMP-AM-FSD-F350-2018

FINISH	Powder Coat		
SURFACE AREA [sq. in]		231.47	NAME
DIMENSIONS ARE IN INCHES		DRAWN	Luis Martinez
MATERIAL	6061-T6 (SS)	CHECKED	
DO NOT SCALE DRAWING		DATE	3/29/2018

SIZE	DWG. NO.	REV
A		A

SCALE: NTS | SHEET 2 OF 3

PROPRIETARY AND CONFIDENTIAL
THE INFORMATION CONTAINED IN THIS DRAWING IS THE SOLE PROPERTY OF LARSON ELECTRONICS LLC. ANY REPRODUCTION IN PART OR AS A WHOLE WITHOUT THE WRITTEN PERMISSION OF LARSON ELECTRONICS LLC IS PROHIBITED.

UNLESS OTHERWISE NOTED:

Angle	+/- .5 deg
.X	+/- .02
.XX	+/- .01
.XXX	+/- .005

5 4 3 2 1

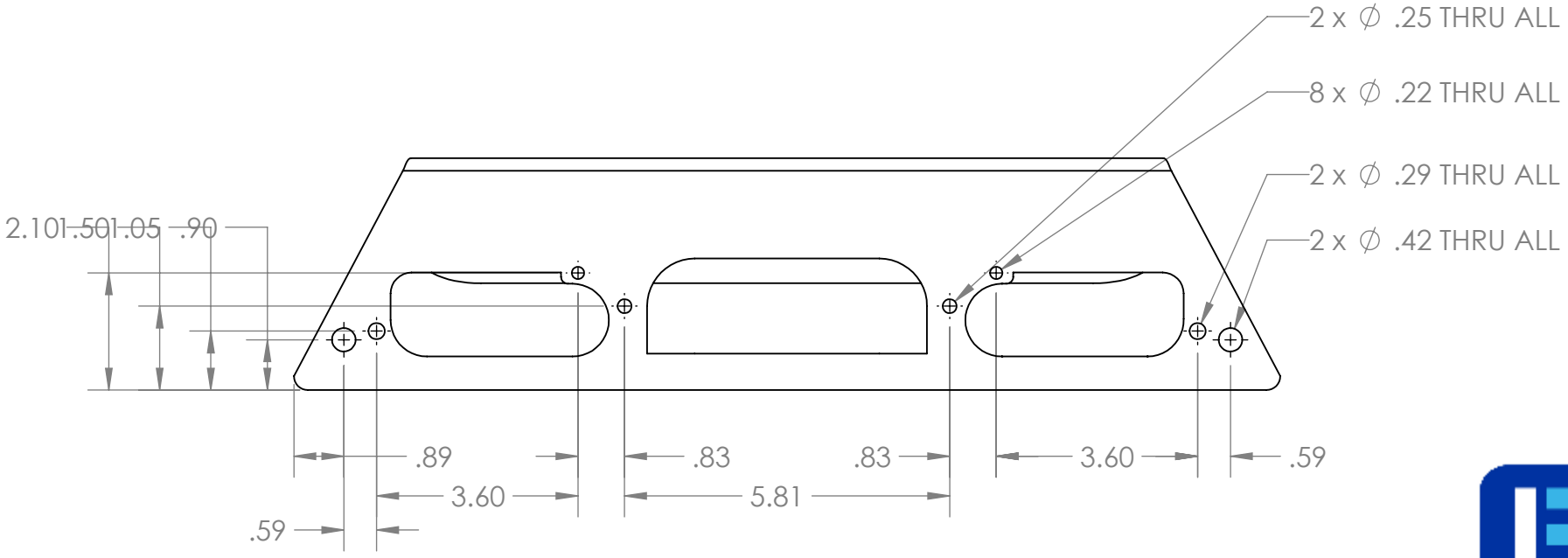

LARSON ELECTRONICS

FINISH	Powder Coat		
SURFACE AREA [sq. in]		231.47	NAME
DIMENSIONS ARE IN INCHES		DRAWN	Luis Martinez
MATERIAL	6061-T6 (SS)	CHECKED	
DO NOT SCALE DRAWING		DATE	3/29/2018

TITLE:

VMP-AM-FSD-F350-2018

SIZE	DWG. NO.	REV
A		A

SCALE: NTS | SHEET 3 OF 3

PROPRIETARY AND CONFIDENTIAL
THE INFORMATION CONTAINED IN THIS DRAWING IS THE SOLE PROPERTY OF LARSON ELECTRONICS LLC. ANY REPRODUCTION IN PART OR AS A WHOLE WITHOUT THE WRITTEN PERMISSION OF LARSON ELECTRONICS LLC IS PROHIBITED.

UNLESS OTHERWISE NOTED:

Angle	+/- .5 deg
.X	+/- .02
.XX	+/- .01
.XXX	+/- .005

5 4 3 2 1







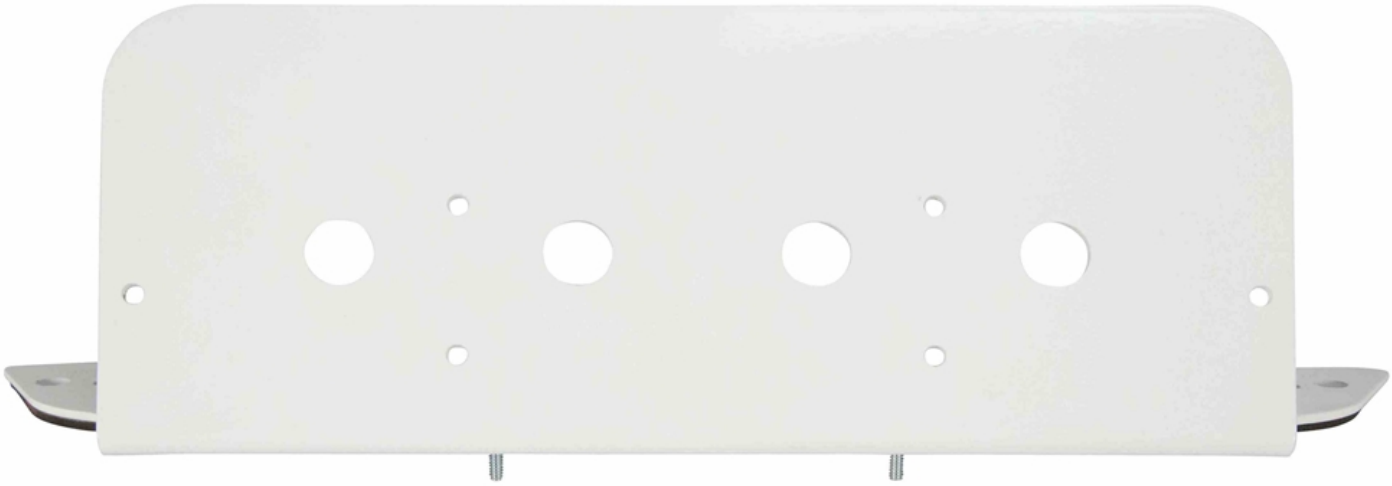

Frequently Asked Questions (FAQ)