Larson Electronics LLC
9419 E US HWY 175, Kemp, TX 75143
Phone: 800.369.6671

www.LarsonElectronics.com
Email: sales@LarsonElectronics.com
Fax: 903.498.3364

EPF-4P.3-NFK

Explosion Proof Electric Fan Blower Ventilator - C1D1 - 1/3 HP Engine - Fan Only - 4" Inlet/Outlet

Product ID: 222740



Larson Electronics LLC manufactures a wide variety of products, including custom built to spec designs. The pictures displayed for this unit are a general representation of form factor for the product line and may not accurately represent this exact configuration in every detail due to custom builds and changes between similar products in our standard catalog. The specifics for this configuration are listed in the specification table and supporting documentation (CAD files, Dimensional Drawing, Name Plate Diagram, Wiring Diagram, etc.). This means that specific details (receptacles, plugs, wires, connections, mounting brackets, external finishes, etc.) may not be accurately represented in images vs specifications. Please review specifications and do not order based solely on images.

EPF-4P.3-NFK Explosion Proof Inline Axial Fan
Voltage: 115 VAC
Startup Amps : 6.9 (Max at Startup)
Constant Amps : 2.5
Motor: 1/3 Horsepower
CFM Delivery : 1390
Motor Duty Cycle: Continuous
Noise Level: 72 dbA @ 3ft
Fan Type: Inline Axial Fan
Fan Blade Material: Anti-static rigid polymeer
Dimensions: 16”W x 16.75”H x 12.5”D
Weight: 33 lbs
Wiring: 10 Foot Cord w 5-15 Exp Proof Plug
Protection: Dual Lug Ground Body/Automatic Reset Thermal Overload

UL and C-UL Listed
Class I, Div. 1, Groups C and D
Class II, Div. 1, Groups E, F, G
T3C Temp rating -30C to 160C
Meets United States and Canadian Safety Ratings

Special Orders- Requirements
Contact us for special requirements

Toll Free: 1-800-369-6671
Intl: 1-214-616-6180
Fax: 1-903-498-3364
E-mail: sales@larsonelectronics.com

Made in Texas

The Larson Electronics EPF-4P.3-NFK Explosion Proof Electric Inline Axial Fan Class 1, Division 1 and Class 2, Division 1 listed and safely and effectively redirects stale air from hazardous location areas. This fan is designed for portability, and can be linked in series when larger lengths of conductive duct are needed.

At start up, the motor within the portable explosion proof fan will draw 6.9 amps. After startup and the fan is at operational speed, the motor will draw a constant 2.5 amps. When operating multiple units on a single circuit, it is best to turn one

fan on at a time to lower total amperage spike introduced to the circuit
This explosion proof fan delivers high-performance airflow with a 1,390 overall CFM rating and 973 CFM when fitted with a 25ft. duct and a 90 degree bend. The 1/3 horsepower electric motor runs from standard 115 VAC single-phase at 60Hz and pulls 2.5 amps. Added safety features include a prewired explosion proof switch, dual grounding lugs on the steel housing, and 10 feet of cord fitted with flying leads. Meets United States and Canadian safety ratings for Class 1, Division 1, Groups C and D & Class II Division 1, Groups E, F and G.



Click Photo to Enlarge



Click Photo to Enlarge

This explosion proof fan is designed for portability and durability with a light weight compact body constructed of powder coated steel and a non-sparking aluminum blower wheel. Rubber coated base feet and an integral carry handle provide easy transport and secure placement when set down on a flat surface. This unit is available with a 4 inch intake and exhaust flange, and includes a built in automatic reset thermal overload for added protection. Ambient temperature for the fan ranges from -20 degrees to 180 degrees Fahrenheit.
Note on Explosion Proof Fans: Can be used as an intake and an exhaust fan.

INCLUDES:
1. Hazardous location ventilation fan (blower)
2. Intake or Exhaust Fan
3. Can be used inline
4. Universal mount

Features:

- 1/3 HP electric motor, 115 VAC, 7.2 amp
- Explosion-proof switch installed and wired
- 4 inch intake and exhaust flange
- 1390 cfm free air delivery
- 973 cfm when a 25ft. duct and a 90 degree bend are present while in use.
- 72 dbA @ 3ft.
- Approved for Class I, Div. 1, Groups C and D and Class II, Div. 1, Groups E, F, G
- Aluminum non-sparking blower wheel
- Dual grounding lugs installed on steel housing
- All Steel, powder coated red with rubber base feet
- Automatic reset thermal overload
- Carry handle frame
- Pre-Wired With 10 Ft. Cord
- Pre-wired with a 15 amp explosion proof 5-15 style plug

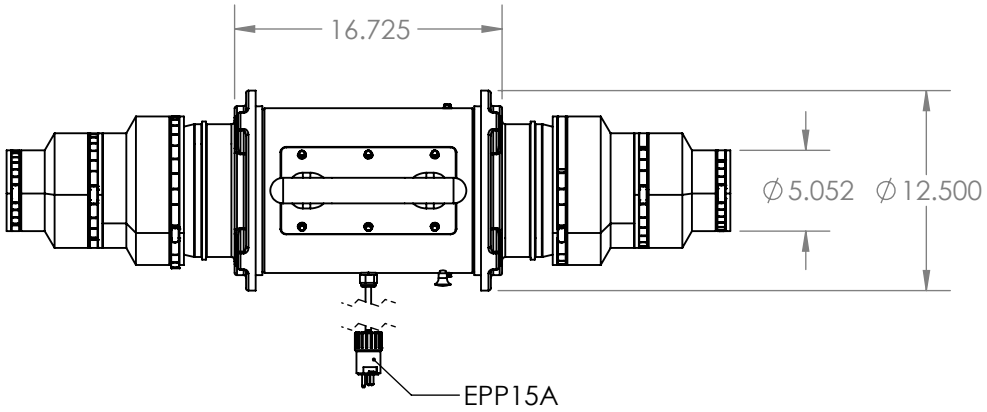

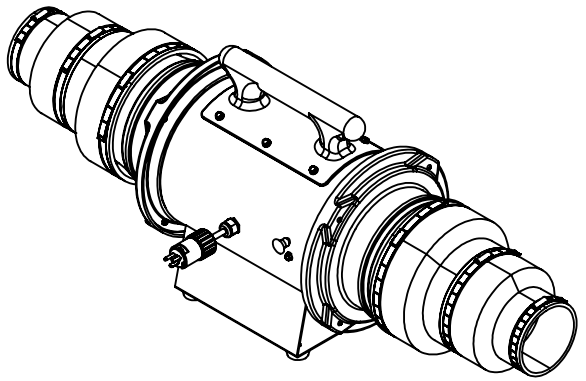

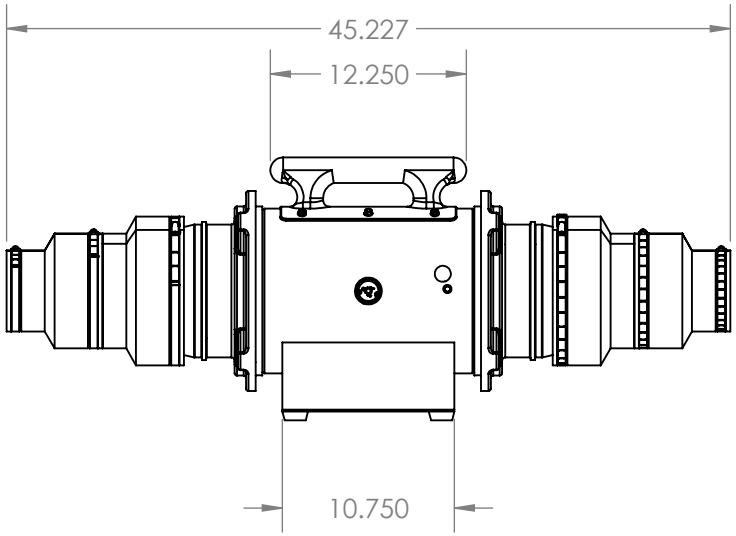

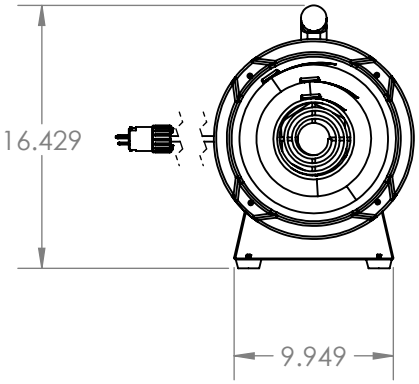

LARSON ELECTRONICS

TITLE:

EPF-4P.3-NFK

FINISH			
SURFACE AREA [sq. in]			NAME
DIMENSIONS ARE IN INCHES		DRAWN	CHRISTOPHER THAUER
MATERIAL		CHECKED	N/A
DO NOT SCALE DRAWING		DATE	10/5/2020

SIZE	DWG. NO.	REV
A		

SCALE: NTS | SHEET 1 OF 1

PROPRIETARY AND CONFIDENTIAL
THE INFORMATION CONTAINED IN THIS DRAWING IS THE SOLE PROPERTY OF LARSON ELECTRONICS LLC. ANY REPRODUCTION IN PART OR AS A WHOLE WITHOUT THE WRITTEN PERMISSION OF LARSON ELECTRONICS LLC IS PROHIBITED.

UNLESS OTHERWISE NOTED:

Angle	+/- .5 deg
.X	+/- .02
.XX	+/- .01
.XXX	+/- .005


Larson Electronics




PERFORMANCE SPECIFICATIONS


HAZARDOUS LOCATION FAN
APPROVED FOR OUTDOOR USE
POUR EMPLOI A L'EXTERIEUR

Frequently Asked Questions (FAQ)