Larson Electronics LLC
9419 E US HWY 175, Kemp, TX 75143
Phone: 800.369.6671

www.LarsonElectronics.com
Email: sales@LarsonElectronics.com
Fax: 903.498.3364

ATEX-HALP-EMG-24-2L-T8-2X18W-R1-220V

36W Flameproof Fluorescent Emergency Linear Fixture - 220V, 50Hz - (2) 2' T8 Lamps - ATEX/IECEx

Product ID: 222238



Larson Electronics LLC manufactures a wide variety of products, including custom built to spec designs. The pictures displayed for this unit are a general representation of form factor for the product line and may not accurately represent this exact configuration in every detail due to custom builds and changes between similar products in our standard catalog. The specifics for this configuration are listed in the specification table and supporting documentation (CAD files, Dimensional Drawing, Name Plate Diagram, Wiring Diagram, etc.). This means that specific details (receptacles, plugs, wires, connections, mounting brackets, external finishes, etc.) may not be accurately represented in images vs specifications. Please review specifications and do not order based solely on images.

ATEX-HALP-EMG-24-2L-T8-2X18W-R1-220V Flameproof Emergency Fluorescent Light

Listing: International, European Union
Lamp Technology: Fluorescent
Dimensions: 28.5" x 8.7" x 5.7" (725mm x 222mm x 145mm)
Lamp Quantity: 2
Weight: 14.99 lbs (6.8 kgs)
Voltage: 220V AC
Frequency: 50 Hz
Total Watts: 36W (2 x 18W)
Total Lumens: 2,380 lms (2 x 1,190 lms)
Luminous Efficacy: -
Lamp Life: 7,500+ Hours
Color Temperature: 5000K, 4100K or 2700K
Color Rendering Index: 75
Lamp Type: T8
Lamp Base: 2-pin G13
Replacement Lamp: -
Beam Angle: -
Lighting Configuration: Flood Pattern
Power Efficiency: -
Power Factor: >0.98
Ballast Type: Electronic
Ballast Position: Internal
Inverter Type (Emergency Mode): Electronic

Ratings/Approvals

ATEX/IECEx Rated
Zone 1/Zone 2
Zone 21/Zone 22
Ex deqmb IIC T4 Gb
Ex II 2GD
IP66
Emergency Backup Mode

Emergency Runtime: 90 Minutes
Emergency Start Time: 0.1 Second
Emergency Lumens: 1,190 lms (1 Lamp)
Battery Recharge Time: 24 Hrs
Emergency Status Display: (3) LEDs (Red, Yellow, Green)
Amperage: 0.2A @ 220V
Ambient Operating Temp Range: -25°C to +40°C
Operating Temp Rating: T4
Housing Material: Glass Fiber Reinforced Polyester
Housing Finish: -
Lens Material: Polycarbonate
Gasket Material: Foam
Mount: -
Terminals: L1, L2, L, N + (2) PE - 0.39" (10mm)
Hub Quantity: 1
Hub Size/Location: (1) 1.5" (M25) @ Side
Stopping Plugs: (2) 1.5" (M25) Molded Plastic/Polyamide

Special Orders - Special Requirements
Contact us for special requirements
Toll Free: 1-800-369-6671
Intl: 1-903-270-1187
Fax: 1-903-498-3364
E-mail: sales@larsonelectronics.com

The Larson Electronics ATEX-HALP-EMG-24-2L-T8-2X18W-R1-220V Flameproof Fluorescent Emergency Linear Fixture is designed for outdoor illumination in ATEX/IECEx rated flammable environments. Equipped with two, 2-foot T8 fluorescent lamps, this emergency 36-watt fixture is compatible with 220V AC, 50 Hz. The IP66-rated unit is constructed of glass fiber reinforced polyester with a polycarbonate lens and features an internal electronic ballast/inverter with an interlocking system for protection.

The ATEX-HALP-EMG-24-2L-T8-2X18W-R1-220V is a powerful lighting solution for combustible facilities, industrial sites and outdoor locations. This 36-watt unit operates on 220V AC, 50 Hz and contains two, 2-foot T8 fluorescent lamps (2-pin G13 base). During use, the emergency fixture offers 2,380 lumens of output in a flood beam configuration, with an exceptional CRI rating of 75. Color temperature options include: 5000K, 4100K or 2700K.

An electronic, internal ballast ensures reliable lighting performance and features two interlock switches that disconnects all poles to the ballast and inverter, as well as turns the power off when the diffuser is opened.

This full-plastic explosion proof fixture is constructed of glass fiber reinforced polyester. The lens consists of UV-resistant polycarbonate and is equipped with a foam gasket. This IP66-rated unit comes with an approximate lifespan of 7,500+ hours and is suitable for ATEX/IECEx rated Zone 1/Zone 2 and Zone 21/Zone 22 flammable environments. Equipped with a T4 temperature rating, the outdoor fixture can be used in locations with ambient temperatures ranging between -25°C to +40°C.

Battery-powered Emergency Backup: The flameproof light contains a battery backup unit that adds emergency light functionality to the fixture. With an electronic inverter, this fixture will continue to operate one fluorescent lamp for 90 minutes at 1,190 lumens after the main electrical power to the light is severed. Once standard electrical power is restored, the emergency battery pack will be recharged, which takes approximately 24 hours from a drained state. The fixture contains three LED status lights for real-time monitoring in emergency mode: red, yellow and green.

Wiring: The ATEX-HALP-EMG-24-2L-T8-2X18W-R1-220V features L1, L2, L, N and two PE terminals for completing electrical connections. Cables are fed through one, 1.5" (M25) hub, located at the side of the fixture. This unit comes with two, 1.5" (M25) molded plastic/polyamide stopping plugs. A central locking system protects the internal components of the unit, which must be unlocked during installation or relamping.

Mounting Compatibility: This explosion proof light is compatible with the following mounting configurations (not included): ceiling, pendant, chain hanging, angle bracket, pole clamp oil derrick and pole top. We offer these mounting accessories at an additional cost.

Suggested Applications: Paint spray booths, aircraft maintenance, oil drilling

rigs, refineries, solvent and cleaning areas, gas processing plants, chemical manufacturing, waste water treatment plants, offshore applications and more.
At Larson Electronics, we do more than meet your lighting needs. We also provide replacement, retrofit, and upgrade parts as well as industrial grade power accessories. Our craftsmen can custom build any lighting system and/or accessories to fit the unique demands of your operation. A commitment to honesty, quality, and dependability has made Larson Electronics a leader in the lighting and electronics business since 1973. Contact us today at 800-369-6671 or message sales@larsonelectronics.com for more information about our custom options tailored to meet your specific industry needs.

REV	DESCRIPTION	DATE
A	PRODUCTION RELEASE	9/4/2024

ATEX-HALP-EMG-24-2L-T8-2X18W-R1-220V-50K

LARSON ELECTRONICS®

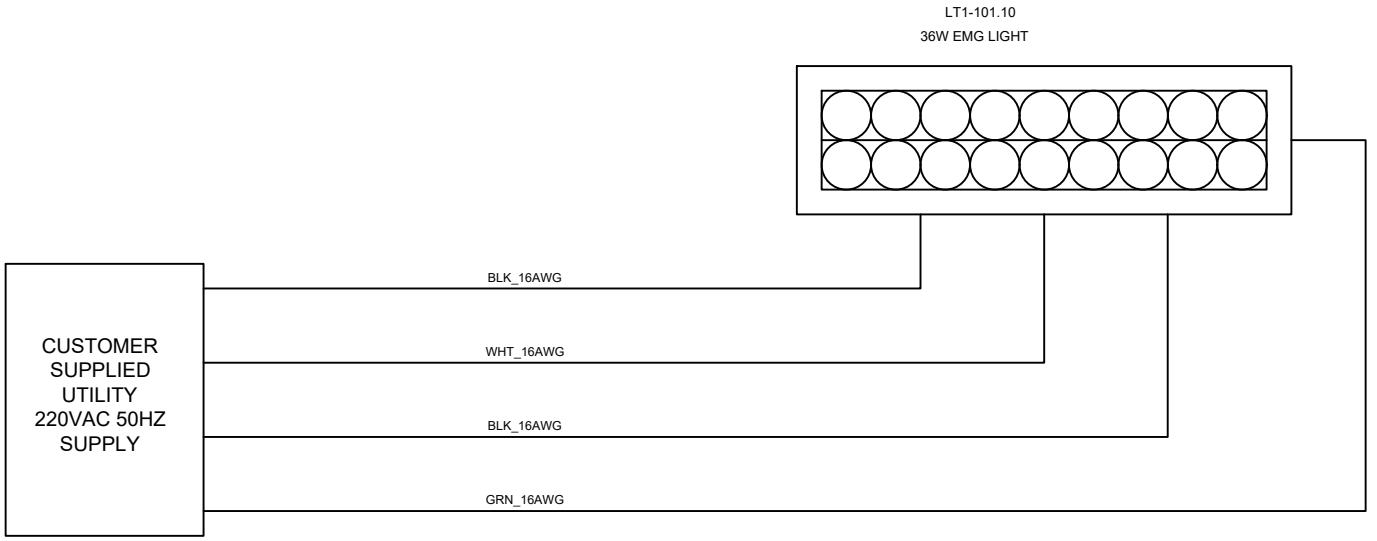

TAGS	QTY	CATALOG	DESCRIPTION
LT1-101.10	1	UNV00012803	Full plastic explosion-proof emergency fluorescent light fittings with mounting bracket for ceiling type

LARSON ELECTRONICS

9419 E US HWY 175,
KEMP, TX 75143

TITLE: ATEX-HALP-EMG-24-2L-T8-2X18W -R1-220V-50K

DRAWN BY	DATE	REV
S.Desai	9/4/2024	A
CHECKED BY	SHEET #	DRAWING #
J.Maldonado	1 OF 1	101

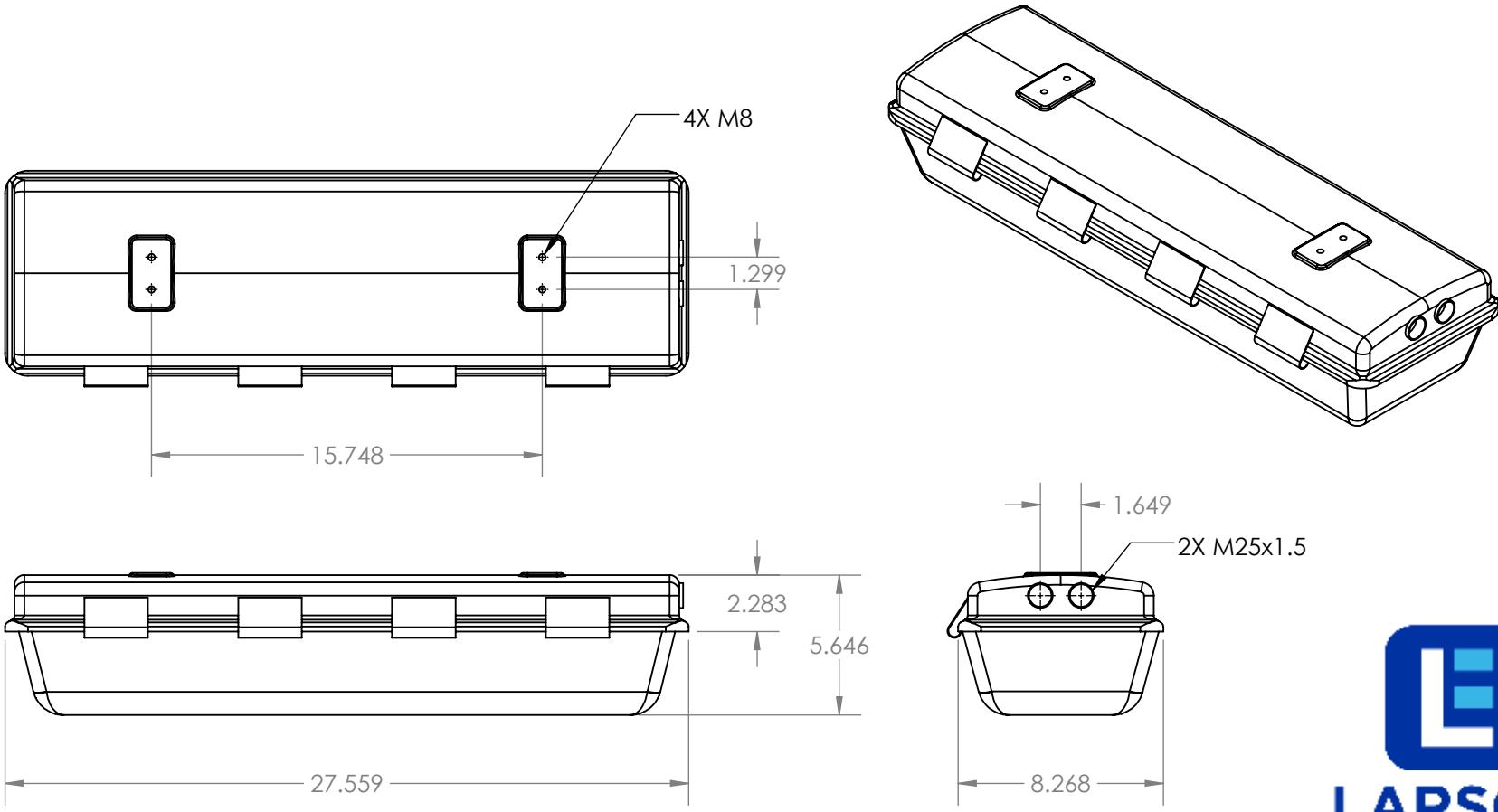

LARSON ELECTRONICS

TITLE:

ATEX-HALP-24-2L

PROPRIETARY AND CONFIDENTIAL
THE INFORMATION CONTAINED IN THIS DRAWING IS THE SOLE PROPERTY OF LARSON ELECTRONICS LLC. ANY REPRODUCTION IN PART OR AS A WHOLE WITHOUT THE WRITTEN PERMISSION OF LARSON ELECTRONICS LLC IS PROHIBITED.

UNLESS OTHERWISE NOTED:

Angle	+/- .5 deg
.X	+/- .02
.XX	+/- .01
.XXX	+/- .005

FINISH			
SURFACE AREA [sq. in]			NAME
DIMENSIONS ARE IN INCHES		DRAWN	CHRISTOPHER THAUER
MATERIAL		CHECKED	N/A
DO NOT SCALE DRAWING		DATE	4/13/2020

SIZE	DWG. NO.	REV
A		

SCALE: NTS | SHEET 1 OF 1








A19
LARSON ELECTRONICS
LARSONELECTRONICS.COM
1-800-369-6071
sales@larsonelectronics.com
MISTER

Certification

Manufacturer: Larson Electronics LLC
Address: 9419 US-HWY 175
Kemp, Texas 75143

Declare the following equipment conforms to the standard(s) as listed:

Model: ATEX-HALP-XXX-LED-XXX
Description: Flameproof LED Fixture

The ATEX-HALP-XXX-LED-XXX flameproof light fixture is comprised of a CZ086X series light fixture, wired and assembled to voltage and wiring per sku variants. Light fixture may include custom external mounting brackets, may be equipped with battery backup, and may include multiple LED modules. The ATEX-HALP-XXX-LED-XXX complies with the essential protection requirements of the European Parliament of the Council Directive for ATEX Directive and IEC Ex certified. This certification applies to all specimens manufactured in accordance to the manufactures drawings.

Signed for and on behalf of: Larson Electronics, LLC
Place of issue: Kemp, TX

Signature: James Thomas

Name: James Thomas
Position: Operations Manager

LARSON ELECTRONICS LLC • 9419 E US HWY 175 • KEMP, TX 75143
p: 1-800-369-6671 • intl: 903-498-3363 • f: 903-498-3364 • sales@larsonelectronics.com

Issuing date: Apr.24th, 2019

MSDS Report

Samples : Explosion-proof battery module

Client Unit: Larson Electronics LLC

Client Address: 9419 E US HWY 175, Kemp, TX 75143 USA

NI-CD RECHARGEABLE BATTERY MATERIAL SAFETY DATA SHEET

Section 1 - Chemical Product and Company Identification

Product Name: Explosion-proof battery module

Sample Code: ATEX-HALP Series NI-CD Rechargeable Battery

Client Unit: Larson Electronics LLC

Address: 9419 E US HWY 175, Kemp, TX 75143

Tel: 800-369-6671

Fax: 903-498-3364

Section 2 – Hazards Identification

Health hazards：

These chemicals are contained in a sealed can. Risk of exposure occurs only if the battery is mechanically or electrically abused. Contact of electrolyte with skin and eyes should be avoided.

Section 3 – Composition/Information on Ingredient

The ingredients are contained in a hermetically sealed case, designed to withstand temperatures and pressures encountered during normal use. As a result, during normal use, hazardous materials are fully contained inside the battery. The battery should not be opened or exposed to heat because exposure to the following ingredients contained within could be harmful under some circumstances. The following information is provided for the user's information only.

Chemical Name	CAS No.	In % by Weight
Cadmium oxide	1306-19-0	15.0 ~ 25.0
Nickel hydroxide	12054-48-7	15.0 ~ 25.0
KOH （d=1.25g/cm^3）	1310-58-3	4.5 ~ 8.0
Cadmium	7440-43-9	12.0 ~ 18.0
PP (Diaphragm)	9003-07-0	1.0 ~ 3.0
Nickel	7440-02-0	10.0 ~ 18.0
CoO	1307-96-6	1.0~ 1.5
Steel	N/A	25.0 ~ 35.0
Other	N/A	≤1

Section 4 – First-aid Measures

Inhalation: During normal use inhalation is an unlikely route of exposure due to containment of hazardous materials within the battery case. However, should the batteries be exposed to extreme heat or pressures causing a breach in the battery cell case, exposure to the constituents may occur. Inhalation of cobalt dusts may result in pulmonary conditions.

Ingestion: If the battery case is breached in the digestive tract, the electrolyte may cause localized burns.

Skin Absorption: No evidence of adverse effects from available data.

Skin Contact: Exposure to the electrolyte contained inside the battery may result in chemical burns.

Exposure to nickel may cause dermatitis in some sensitive individuals.

Eye Contact: Exposure to the electrolyte contained inside the battery may result in severe irritation and chemical burns.

Other Effects of Repeated (Chronic) Exposure: Chronic overexposure to nickel may result in cancer; dermal contact may result in dermatitis in sensitive individuals.

Medical Conditions Aggravated by Overexposure: knowledge of the available toxicology information and of the physical and chemical properties of the material suggests that overexposure in unlikely to aggravate existing medical conditions.

Emergency and First Aid Procedures: Swallowing: Do not induce vomiting. Seek medical attention immediately.

Skin: If the internal cell materials of an opened battery cell come into contact with the skin, immediately flush with water for at least 15 minutes. Inhalation: If potential for exposure to fumes or dusts occurs, remove immediately to fresh air and seek medical attention.

Eyes: If the contents from an opened battery come into contact with the eyes, immediately flush eyes with water continuously for at least 15 minutes. Seek medical attention.

Section 5 – Fire-Fighting Measures

Extinguishing Media:

Dry chemical, carbon dioxide, water spray/regular foam.

Special Fire-Fighting Procedures

Self-contained breathing apparatus.

Unusual Fire and Explosion Hazards

Cell may vent when subjected to excessive heat exposing battery contents.

Hazardous Combustion Products:

Carbon monoxide, carbon dioxide, metal oxide, irritating fume and toxic gas.

Section 6 – Accidental Release Measures

Procedures to contain and clean up leaks or spills:

In the event of a battery rupture, prevent skin contact and collect all released material in a plastic lined metal container.

Reporting procedure:

Report all spills in accordance with Federal, State and Local reporting requirements.

Waste disposal method:

Earth or sand should be used to absorb the exudation, seal leaking battery and earth in a heavy duty polythene bag and dispose of as special waste in accordance with local regulations.

Section 7 - Handling and Storage

The battery should not be opened, destroyed or incinerate, since they may leak or rupture and release to the environment the ingredients that they contain in the hermetically sealed container If the battery material is released, remove personnel from area until fumes dissipate. Provide maximum ventilation to clear out hazardous gases. Wipe it up with a cloth, and dispose of it in a plastic bag and put into a steel can. The preferred response is to leave the area and allow the battery to cool and vapors to dissipate. Provide Avoid skin and eye contact or inhalation of vapors. Remove spilled liquid with absorbent and incinerate. Do not short circuit terminals, or over charge the battery, forced over-discharge, throw to fire. Do not crush or puncture the battery, or immerse in liquids.

Precautions to be taken in handling and storing： Avoid mechanical or electrical abuse. Storage preferably in cool, dry and ventilated area, which is subject to little temperature change. Storage at high temperatures should be avoided. Do not place the battery near heating equipment, nor expose to direct sunlight for long periods.

Other Precautions： The battery may explode or cause burns, if disassembled, crushed or exposed to fire or high temperatures. Do not short or install with incorrect polarity.

Section 8 - Exposure Controls，Personal Protection

Respiratory Protection：

In case of battery venting, provide as much ventilation as possible. Avoid confined areas with venting cell cores. Respiratory Protection is not necessary under conditions of normal use.

Ventilation： Not necessary under conditions of normal use.

Protective Gloves： Not necessary under conditions of normal use.

Other Protective Clothing or Equipment： Not necessary under conditions of normal use.

Personal Protection is recommended for venting battery： Respiratory Protection, Protective Gloves, Protective Clothing and safety glass with side shields.

Section 9–Physical and Chemical Properties

Appearance： Sealed battery

Adour： Odorless

Color： N/A

ＰＨ： N/A

Flash Point： N/A unless individual components exposed.

Flammability： N/A unless individual components exposed.

Solubility (Water)： N/A unless individual components exposed.

Solubility(Other)： N/A unless individual components exposed.

Section 10–Stability and Reactivity

Stability

Stable

Conditions to Avoid

Heating, mechanical abuse and electrical abuse

Hazardous Decomposition Products

Carbon monoxide, carbon dioxide, metal oxide, irritating fume and toxic gas.

Hazardous polymerization

N/A

If leaked, forbidden to contact with strong oxidizers, mineral acids, strong alkalis, halogenated hydrocarbons.

Section 11– Toxicological Information

Inhalation, skin contact and eye contact are possible when the battery is opened.

Section 12–Ecological Information

Mobility: None known if used/disposed of correctly.

Persistence and degradability: None known if used/disposed of correctly.

Ecotoxicity effects: None known if used/disposed of correctly.

Section 13–Disposal Considerations

Waste from residues/unused products: The battery is a hazardous waste under PCRA. Dispose of in accordance with appropriate local regulations. Should not release into the environment.

Contaminated packaging: Not applicable.

Section 14 - Transport Information

Transported by air:

Not classified as dangerous goods in the meaning of air transport regulations.

Regulatory body	Special Provision
IATA(59th Edition-2018)	A123

International Civil Aviation Organization (ICAO) and International Air Transport Association (IATA), Special Provision A123 state: An electrical battery or battery powered device having the potential of dangerous evolutions of heat that is non prepared so as to prevent a short circuit (e.g. in the case of batteries, by the effective insulation of exposed terminals; or in the case of equipment, by disconnection of the battery and protection of exposed terminals) is forbidden from transportation.

DISON sealed nickel cadmium batteries are not subject to these regulations and special provision as their terminals are protected from short-circuit when packaged for transport.

Transported by sea:

Not a hazard material or hazard goods for transportation.

Separate Nickel-Cadmium batteries when shipping to prevent short-circuiting.

They should be packed in strong packaging for support during transport.

Take in a cargo of them without falling, dropping, and breakage. Prevent collapse of cargo piles and wet by rain. The container must be handled carefully. Do not give shocks that result in a mark of hitting on a cell.

Section 15 - Regulatory Information

Law Information

《Dangerous Goods Regulation》

《Recommendations on the Transport of Dangerous Goods Model Regulations》

《International Maritime Dangerous Goods》

《Technical Instructions for the Safe Transport of Dangerous Goods》

《Classification and code of dangerous goods》

OSHA Hazard Communication Standard Status

Toxic Substances Control Act(TSCA) Status

California Proposition 65

European/International Regulations

In accordance with all Federal, State and Local laws.

Section 16 - Other Information

The date in this MSDS relates only to the specific material designed herein.

Frequently Asked Questions (FAQ)