Larson Electronics LLC
9419 E US HWY 175, Kemp, TX 75143
Phone: 800.369.6671

www.LarsonElectronics.com
Email: sales@LarsonElectronics.com
Fax: 903.765.7664

EPL-FL26-100

5W Explosion Proof LED Handheld Light - Class 1 Division 1 - 400 Lumens, 25' SOOW Cord

Product ID: 1970



Image: EPL-FL26-100

Larson Electronics LLC manufactures a wide variety of products, including custom built to spec designs. The pictures displayed for this unit are a general representation of form factor for the product line and may not accurately represent this exact configuration in every detail due to custom builds and changes between similar products in our standard catalog. The specifics for this configuration are listed in the specification table and supporting documentation (CAD files, Dimensional Drawing, Name Plate Diagram, Wiring Diagram, etc.). This means that specific details (receptacles, plugs, wires, connections, mounting brackets, external finishes, etc.) may not be accurately represented in images vs specifications. Please review specifications and do not order based solely on images.

EPL-FL26-100 Explosion Proof LED Work Light
FM Listing: United States
Lamp Type: LED
Dimensions: 14.5"-L x 3.5"-Dia
Voltage: Stnd-120V-60hz Optional-120 Volts, 50 Hz and 220 volts, 50 Hz
Total Watts: 5 Watts
Total Lumens: 400
Luminous Efficacy: 80 Lm/W
Lamp Life: 50,000+ Hours
Color Temp: 5600K
Lux At Lens: 48,900
Mounting: Aluminum Swivel Hook
Wiring: 25' 16/3 SOOW w/ Cord Cap
Cord Cap Options: 5-15, 6-15, 5-20, 6-20, L5-15, L6-15, L5-20, L6-20, BS1363, Schuko, or Pigtail

Approvals/Ratings
Class I, Division 1 for Groups C, D
Class II, Division 1 Groups E, F, G
Class III, Division 1
FM Listed JC-580A Cord
NEMA 4
U.S Certificate

Special Orders - Special Requirements
Contact us for special requirements
Toll Free: 1-800-369-6671
Intl: 1-903-270-1187
E-mail: sales@larsonelectronics.com

Made in the USA

The EPL-FL26-100 from Larson Electronics is a Compact Hazardous Location LED Work Light that is approved for use in Class I Division 1 Groups C and D hazardous environments, is FM 508 listed, and is ideal for close quarter work and inspection activities in hazardous locations requiring explosion proof protection.

This 5 watt explosion proof LED handlamp from Larson Electronics produces 400 lumens of

pure LED illumination and comes complete with 25 feet of explosion proof cord. The EPL-FL26-100 LED drop light's housing is constructed of non sparking aluminum with molded bumper guards, an annealed glass tube shield and integral lamp shock absorbers. This hazardous location hand lamp is designed to Article 500 of the National Electrical Code and is Class I, Division 1 and Class II Division 1 hazardous location environment approved. This explosion proof LED hand lamp can be installed and used within the hazardous location area making it ideal for hazardous work areas where a ready source of easily managed lighting is desired.

This particular unit's internal LED circuitry automatically senses and adjusts the incoming current to the correct level, allowing the unit to run off a variety of voltages ranging from 120 - 277V AC. The lamp assembly contains 24 individual LED diodes that produce an exceptionally bright output, creating three times as much light as its fluorescent counterparts. The Kelvin temperature color on this unit is 5600K and the rated lifespan of the LEDs lamp assembly is approximately 50,000 hours.

LED Benefits: Unlike gas burning and arc type lamps that have glass bulbs, LEDs have no filaments or fragile housings to break during operation and/or transportation. Instead of heating a small filament or using a combination of gases to produce light, light emitting diodes (LEDs) use semi-conductive materials that illuminate when electric current is applied, providing instant illumination with no warm up or cool down time before re-striking. Because there is no warm up period, this light can be cycled on and off with no reduction in lamp life.

LED lights run at significantly cooler temperatures than traditional metal halide and high pressure sodium lights and contain no harmful gases, vapors, or mercury, making them both safer and more energy efficient. No extra energy is wasted in cooling enclosed work areas due to external heat emissions from bulb type lights, and the operator risks associated with traditional lighting methods, such as accidental burns and exposure to hazardous substances contained in the glass bulbs, are eliminated. In addition, LEDs are also safer for the environment as they are 100% recyclable, which eliminates the need for costly special disposal services required with traditional gas burning and arc type lamps.

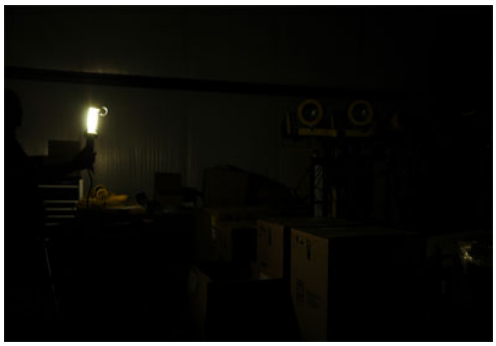

EPL-FL26-100 fluorescent hand lamp illuminating a closed warehouse.

Click Photo to Enlarge



EPL-FL26-100's output, more than triple the amount of it's fluorescent counterpart.

Click Photo to Enlarge

This 5 watt LED light is suitable for use in areas where petrochemical vapors and various dusts are present and projects 400 lumens of light, roughly equivalent to a 150 watt incandescent bulb as estimated by Sylvania. This unit is approximately 287% brighter than it's fluorescent counterpart, nearly tripling the output with use of a low wattage, low amp draw LED light emitter. LED lights are popular in paint prep, painting, and post-paint inspection operations due to the even, pure, white color light produced.

Voltage: The drivers in this unit provide the ability to automatically monitor and adjust input current to maintain the correct LED voltage levels regardless of input levels across a specific range. These light towers can operate on current ranging from 120 to 277V AC or 11 to 25V AC/DC without any modifications necessary as a result. This ability to sense and adjust input current also provides protection against voltage spikes and drops that can occur in electrical systems which would otherwise result in burning up or premature LED failure without it.

Click Photos to Enlarge



5-15 Straight Blade Plug
15 Amp / 125 V Rated



L5-15 Twist Lock Plug
15 Amp / 125 V Rated



L6-15 Twist Lock Plug
15 Amp / 250 V Rated



UK BS1363 Straight Blade Plug
13 Amp / 250 V Rated / Internal Fuse



Intl Schuko 2-Pin Plug
16 Amp / 250 V Rated / Grounded



Flying Leads / Pigtail Wires

Wiring/Plug: This compact hazardous location LED work light is equipped with 25 feet of 16/3 chemical and abrasion resistant SOOW cord that is fitted with an industrial grade cord cap for easy connection to common wall outlets. Plug options include standard 5-15 15 amp straight blade plug for 110 V wall outlets with ground, standard 5-20 20 amp straight blade plug for 110 V wall outlets with ground, standard 6-15 15 amp straight blade plug for 220-240 V wall outlets with ground, standard 6-20 20 amp straight blade plug for 220-240 V wall outlets with ground, NEMA L5-15 15 amp twist lock plug for 125V twist lock outlets, NEMA L5-20 20 amp twist lock plug for 125 V twist lock outlets, NEMA L6-15 15 amp twist lock plug for 240 V twist lock outlets, NEMA L6-20 20 amp twist lock plug for 240 V twist lock outlets, British BS1363 13 amp fused 3-blade plug for United Kingdom outlets, or a two pin 16 amp rated Schuko plug with ground contact and socket for European outlets up to 250 V. Alternatively, we can provide flying leads with no plug for hard wire applications or for operators who prefer to wire in user provided cord caps. Please choose pigtail option below for flying leads with no plug.

This explosion proof hand light comes standard with 120 Volts, 60 Hz for US voltages but is also available in 120 Volts, 50 Hz (Mexico) and 220 volts, 50 Hz for international usage.

At Larson Electronics, we do more than meet your lighting needs. We also provide replacement, retrofit, and upgrade parts as well as industrial grade power accessories. Our craftsmen can custom build any lighting system and/or accessories to fit the unique demands of your operation. A commitment to honesty, quality, and dependability has made Larson Electronics a leader in the lighting and electronics business since 1973. Contact us today at 800-369-6671 or message sales@larsonelectronics.com for more information about our custom options tailored to meet your specific industry needs.

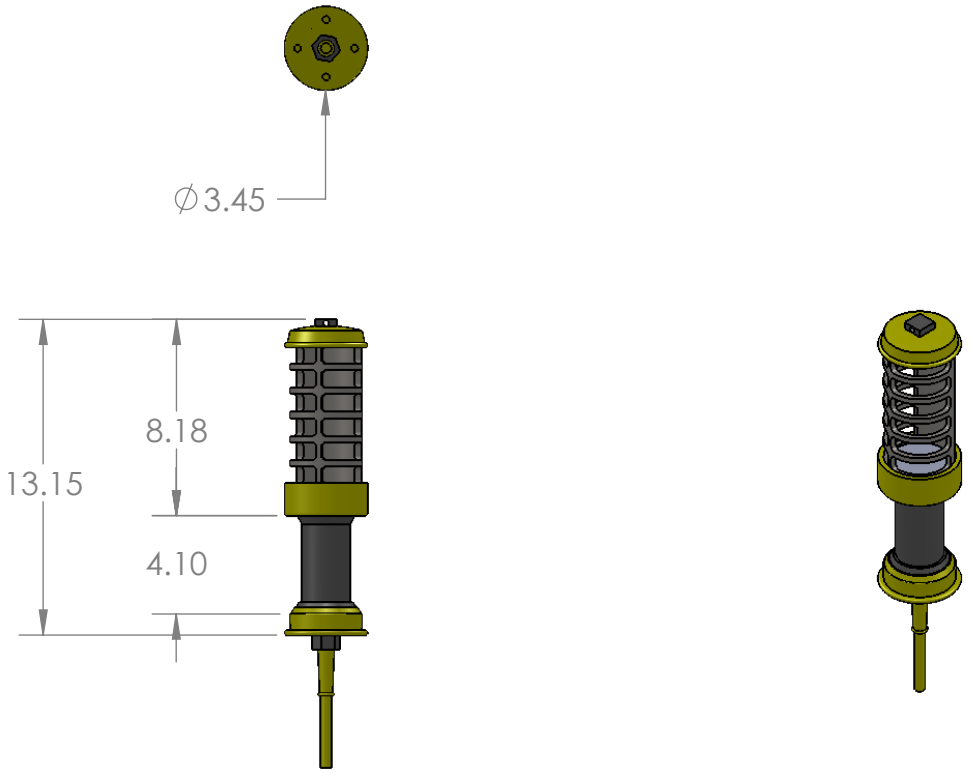

PROPRIETARY AND CONFIDENTIAL

THE INFORMATION CONTAINED IN THIS DRAWING IS THE SOLE PROPERTY OF Magnalight.com. ANY REPRODUCTION IN PART OR AS A WHOLE WITHOUT THE WRITTEN PERMISSION IS PROHIBITED.

		UNLESS OTHERWISE SPECIFIED:		NAME	DATE
		DIMENSIONS ARE IN INCHES TOLERANCES: FRACTIONAL ± ANGULAR: MACH ± BEND ± TWO PLACE DECIMAL ± THREE PLACE DECIMAL ±	DRAWN		
			CHECKED		
			ENG APPR.		
			MFG APPR.		
		INTERPRET GEOMETRIC TOLERANCING PER:	Q.A.		
		MATERIAL	COMMENTS:		
NEXT ASSY	USED ON	FINISH			
APPLICATION		DO NOT SCALE DRAWING			

LarsonElectronics.com

TITLE:

EPL-FL26

SIZE	DWG. NO.	REV
A		A

SCALE: 1:8	WEIGHT:	SHEET 1 OF 1

5 4 3 2 1

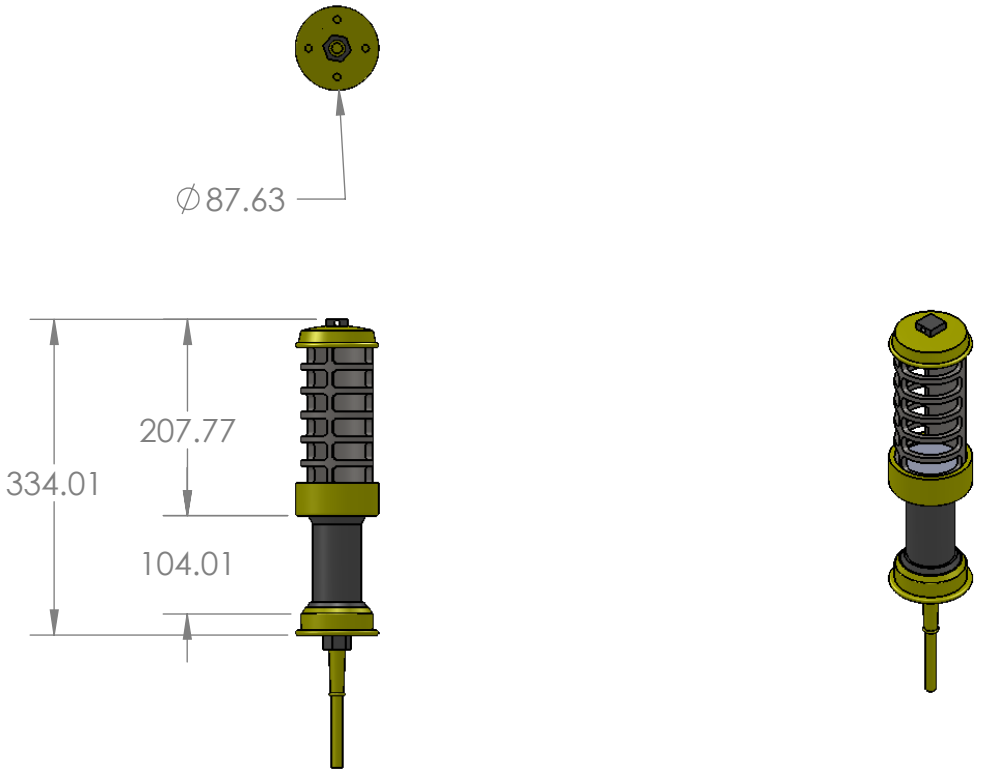

		UNLESS OTHERWISE SPECIFIED:		NAME	DATE
		DIMENSIONS ARE IN INCHES TOLERANCES: FRACTIONAL ± ANGULAR: MACH ± BEND ± TWO PLACE DECIMAL ± THREE PLACE DECIMAL ±	DRAWN		
			CHECKED		
			ENG APPR.		
			MFG APPR.		
		INTERPRET GEOMETRIC TOLERANCING PER:	Q.A.		
		MATERIAL	COMMENTS:		
NEXT ASSY	USED ON	FINISH			
APPLICATION		DO NOT SCALE DRAWING			

PROPRIETARY AND CONFIDENTIAL

THE INFORMATION CONTAINED IN THIS DRAWING IS THE SOLE PROPERTY OF Magnalight.com. ANY REPRODUCTION IN PART OR AS A WHOLE WITHOUT THE WRITTEN PERMISSION IS PROHIBITED.

LarsonElectronics.com

TITLE:

EPL-FL26

SIZE	DWG. NO.	REV
A		A

SCALE: 1:8	WEIGHT:	SHEET 1 OF 1

5 4 3 2 1

Larson Electronics LLC
9419 E US HWY 175, Kemp, TX 75143
Phone: 800.369.6671

www.LarsonElectronics.com
Email: sales@LarsonElectronics.com
Fax: 903.765.7664



Larson Electronics LLC
9419 E US HWY 175, Kemp, TX 75143
Phone: 800.369.6671

www.LarsonElectronics.com
Email: sales@LarsonElectronics.com
Fax: 903.765.7664



Larson Electronics LLC
9419 E US HWY 175, Kemp, TX 75143
Phone: 800.369.6671

www.LarsonElectronics.com
Email: sales@LarsonElectronics.com
Fax: 903.765.7664



Larson Electronics LLC
9419 E US HWY 175, Kemp, TX 75143
Phone: 800.369.6671

www.LarsonElectronics.com
Email: sales@LarsonElectronics.com
Fax: 903.765.7664



Larson Electronics LLC
9419 E US HWY 175, Kemp, TX 75143
Phone: 800.369.6671

www.LarsonElectronics.com
Email: sales@LarsonElectronics.com
Fax: 903.765.7664

Frequently Asked Questions (FAQ)

There are no Faqs