Larson Electronics LLC
9419 E US HWY 175, Kemp, TX 75143
Phone: 800.369.6671

www.LarsonElectronics.com
Email: sales@LarsonElectronics.com
Fax: 903.765.7664

CML-4-CAMO

100W Sealed Beam HIR Camo Spotlight w/ Handle - 3.25" Magnetic Base - 12 Mil Candlepower - 750' Beam

Product ID: 1709



Image: CML-4-CAMO

Larson Electronics LLC manufactures a wide variety of products, including custom built to spec designs. The pictures displayed for this unit are a general representation of form factor for the product line and may not accurately represent this exact configuration in every detail due to custom builds and changes between similar products in our standard catalog. The specifics for this configuration are listed in the specification table and supporting documentation (CAD files, Dimensional Drawing, Name Plate Diagram, Wiring Diagram, etc.). This means that specific details (receptacles, plugs, wires, connections, mounting brackets, external finishes, etc.) may not be accurately represented in images vs specifications. Please review specifications and do not order based solely on images.

CML-4-CAMO Magnetic Sealed Beam Spotlight
Lamp Type: Halogen Infrared Reflective (HIR) Sealed Beam
Dimensions: 3.5"D x 7.5"H, Lens Diameter: 6"
Weight: 1 lbs
Voltage: 12V DC
Watts: 100W
Lux: 2,750 @ 25`
Candlepower: 12 Million
Lamp Life Expectancy: 450 Hours
Spot Beam: 750`L
Lighting Configuration: Spotlight
Amps: 8.33 @ 12V DC
Wiring Options: 16` Cigarette Coil, 16` Cigarette, 21` Ring Terminals, 16` Battery Clamps, 16` Flying Leads
Housing Color: Camo
Mounting: 3.25" Diameter, 100 lb Magnetic Base

Features
Beam Reaches up to 750`
450 Hour Lamp Life
Bulb Coating Increases Light Output
UV & Saltwater Resistant Housing
Adjustable for Rotation and Elevation
Covenient Magnetic Base
Multiple Cord Choice Options
Ideal for Use on .50 Caliber Guns
Camoflage Finish

Special Orders - Special Requirements

Contact us for special requirements

Toll Free: 1-800-369-6671
Intl: 1-903-270-1187
Fax: 1-903-765-7664
E-mail: sales@larsonelectronics.com

Made in the USA

The CML-4-CAMO from Larson Electronics is a 12 million candlepower sealed beam spotlight that enables the operator to control position of the light beam and place the light securely at

any angle on a metallic surface. The magnetic base that this spotlight is attached to is 3.25" in diameter and has 100 pounds of magnetic grip. These camoflage magnetic lights are used as military spotlights, searchlights, utility spotlights, roof mount spotlights, hunting lights, work lights, and linesman lights. The CML-4-CAMO has a camoflage finish on the housing and features vibration resistance that can stand up to use on .50 caliber guns and has been field tested by several branches of the military.

The CML-4-CAMO is a 100 watt sealed beam camoflage spotlight that projects 2750 LUX at 25 feet and reaches distances of 750 feet. This sealed beam unit features a halogen infrared reflective (HIR) bulb. This type of halogen bulb achieves a greater light output while drawing the same wattage as traditional halogen bulbs. This greater light output is due to a special coating used on the bulb and capsule that allows visible light to pass trhough while reflecting infrared (IR) heat back onto the filament of the bulb. The specially designed halogen capsule of HIR lamps features a multi-layered thin film coating that allows visible light to pass through while reflecting infrared energy back to the filament. The reflected energy helps keep the filament within this spotlight at its optimum. The life of the lamp is rated at 450 hours and is the brightest halogen light of the ML series.

Please note that this sealed beam spotlight does not produce light in the infrared (IR) spectrum.



Click Photo to Enlarge

This magnetic sealed beam spotlight enables the operator to control the rotation and elevation of the light beam. The convenient vertical handle makes repositioning and aiming this spotlight a simple task. As an ideal searchlight configuration, the operator positions the beam by changing the angle of the lamp. These lights will hold their position once the operator positions the beam. The operator can adjust the tension bolts to increase or lessen the "position holding" hinge depending on the amount of vibration in the environment. Interlocking aluminum and stainless steel u-brackets secure the elevation of the light beam once positioned. The lamp head is 6 inches in diameter and 3.5 inches deep. It weighs only a pound and is 7.5 inches tall. The housing of this unit is UV and salt water resistant. An on/off toggle switch is located on the back of the lamp housing.



16ft Coil Cord w/Cigarette Plug



21ft Cord with Ring Terminals



16ft Cord w/Battery Clamps



16ft Cord with Cigarette Plug

Click Images to Enlarge

Wiring: Each light comes with a detachable 16 foot coil cord with cigarette plug. The cord is detached via a weatherproof, 2 pin Deutsch connector which easily and securely attaches and detaches the coil cord from the spotlight. Other cords, including 21 foot cords with ring terminals (C-21RT), 16 foot cord with spring battery clamps (alligator clips) (C-16BC) and a 16 foot straight cord with cigarette plug (C-16CP) are available. This light can be ordered in either 12 volt or 24 volt configuration, allowing it to be used with any vehicle or ATV equipped with a cigarette plug. Choose voltage below when ordering.

Mounting: This light has a magnetic mount base. The magnet is 3.25 inches in diameter and has a 100 pound grip base. Larson Electronics offers magnetic mount plates that can be affixed to non-metallic surfaces such as fiberglass, wood, and concrete (sold separately). This spotlight can even be used on .50 caliber guns for military applications due to its high vibration resistance and extreme durability. The CML-4-CAMO also features a vertical handle in the rear of the unit to make repositioning and aiming this spotlight very easy. The entire housing, base and handle of the CML-4-CAMO features a camoflage finish.

At Larson Electronics, we do more than meet your lighting needs. We also provide replacement, retrofit, and upgrade parts as well as industrial grade power accessories. Our craftsmen can custom build any lighting system and/or accessories to fit the unique demands of your operation. A commitment to honesty, quality, and dependability has made Larson Electronics a leader in the lighting and electronics business since 1973. Contact us today at 800-369-6671 or message sales@larsonelectronics.com for more information about our custom options tailored to meet your specific industry needs.

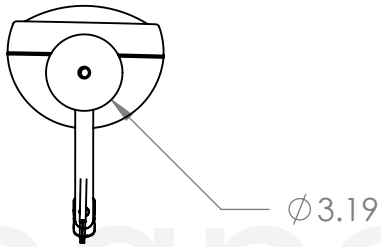

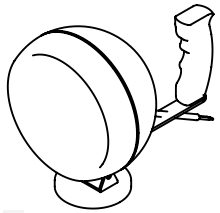

Magnalight.com

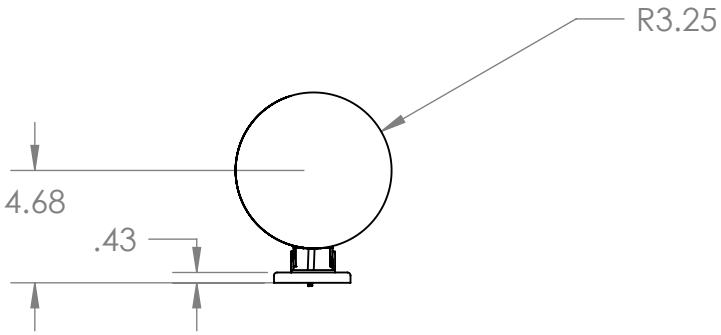

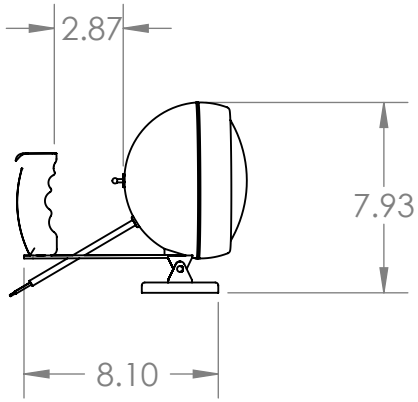

		UNLESS OTHERWISE SPECIFIED:		NAME	DATE
		DIMENSIONS ARE IN INCHES TOLERANCES: FRACTIONAL ± ANGULAR: MACH ± BEND ± TWO PLACE DECIMAL ± THREE PLACE DECIMAL ±	DRAWN		6/09
			CHECKED		
			ENG APPR.		
			MFG APPR.		
		INTERPRET GEOMETRIC TOLERANCING PER:	Q.A.		
		MATERIAL	COMMENTS:		
NEXT ASSY	USED ON	FINISH			
APPLICATION		DO NOT SCALE DRAWING			

PROPRIETARY AND CONFIDENTIAL

THE INFORMATION CONTAINED IN THIS DRAWING IS THE SOLE PROPERTY OF Magnalight.com. ANY REPRODUCTION IN PART OR AS A WHOLE WITHOUT THE WRITTEN PERMISSION OF Magnalight.com IS PROHIBITED.

Magnalight.com

TITLE:

Super Spot Light

SIZE	Part NO.	REV
A	HML series	A-3

SCALE: 1:8 | WEIGHT: | SHEET 1 OF 1

5 4 3 2 1

Larson Electronics LLC
9419 E US HWY 175, Kemp, TX 75143
Phone: 800.369.6671

www.LarsonElectronics.com
Email: sales@LarsonElectronics.com
Fax: 903.765.7664

Frequently Asked Questions (FAQ)

There are no Faqs