Larson Electronics LLC
9419 E US HWY 175, Kemp, TX 75143
Phone: 800.369.6671

www.LarsonElectronics.com
Email: sales@LarsonElectronics.com
Fax: 903.765.7664

MT-DOE16-1P-208V-100KVA-120.240V-N3R

100 kVA Isolation Transformer - 208V Primary - 120/240V Secondary - NEMA 3R - Single Phase

Product ID: 153856

Image: MT-DOE16-1P-208V-100KVA-120.240V-N3R

Larson Electronics LLC manufactures a wide variety of products, including custom built to spec designs. The pictures displayed for this unit are a general representation of form factor for the product line and may not accurately represent this exact configuration in every detail due to custom builds and changes between similar products in our standard catalog. The specifics for this configuration are listed in the specification table and supporting documentation (CAD files, Dimensional Drawing, Name Plate Diagram, Wiring Diagram, etc.). This means that specific details (receptacles, plugs, wires, connections, mounting brackets, external finishes, etc.) may not be accurately represented in images vs specifications. Please review specifications and do not order based solely on images.

MT-DOE16-1P-208V-100KVA-120.240V-N3R Isolation Transformer

Phase: Single Phase
Frequency: 60 Hz
kVA: 100
Primary Voltage: 208 V
Primary Connection: Series (V)
Primary BIL: 10 kV
Primary FCAN: 2 x 2.5%
Primary FCBN: 2 x 2.5%
Secondary Voltage: 120/240 V
Secondary Connection: Parallel/Series-N (V/2V)
Secondary BIL: 10 kV
Winding Material: Aluminum
Efficiency: DOE 2016 / NRCAN 2019 (Also Meets ON Reg. 404/12)
Insulation: 220°C
Temperature Rise: 150°C
Impedance (Std): 3% - 6.1%
Seismic Zone: Zone 4
Sound Level: 50 dBA (ST-20)
Primary Termination: Mounting Pads
Secondary Termination: Mounting Pads
Enclosure Material: NEMA Type 3R Heavy Duty Ventilated
Finish: ANSI 61 Grey, UL50 Finish
Dimensions: 36.00"H x 22.00"W x 29.50"D
Weight: 535 lb
Mounting: Floor Mount

Ratings

Listed for United States and Canada
ANN Cooling
IP24 Rated
Isolation Transformer

Special Orders - Special Requirements

Contact us for special requirements
Toll Free: 1-800-369-6671
Intl: 1-903-270-1187
E-mail: sales@larsonelectronics.com

The MT-DOE16-1P-208V-100KVA-120.240V-N3R 208 V 1 Phase Energy Efficient Isolation Transformer from Larson Electronics is powerful, reliable and designed with the environment in mind. Suitable for both indoor and outdoor applications, the MT-DOE16-1P-208V-100KVA-120.240V-N3R provides increased reliablity and protection against critical equipment failures. The lower operating costs, lower heat emissions and lower cost of ownership make this transformer ideal for a wide range of applications and businesses.

PLEASE NOTE: ANY FREE SHIPPING OFFERS DO NOT APPLY TO POWER DISTRIBUTION PANELS, TRANSFORMERS, OR SUBSTATIONS

Transformer Features: With a transformer rating of 100 kVA, the MT-DOE16-1P-208V-100KVA-120.240V-N3R transformer is a single phase unit with a primary voltage of 208 V. It also provides a secondary voltage of 120/240 V. Featuring robust construction, this unit`s cores are manufactured with non-aging, cold-rolled silicon steel laminations using state of the art technology.

This unit boasts a low cost of ownership and is highly energy efficient. Lower heat emissions mean less cooling is needed as well. The Standard NEMA Type 3R enclosure makes the unit suitable for both indoor and outdoor applications and it can be floor mounted. The unit also features 220°C insulation with a 150°C temperature rise and is rated IP24.

Benefits: The MT-DOE16-1P-208V-100KVA-120.240V-N3R general purpose transformer offers many benefits to the consumer. Precision cut aluminum transformer winding material help to improve performance. The close tolerances used during manufacturing also eliminates burrs which hinder performance. Each core is specially coated to prevent the ingress of moisture and are electrically balanced to minimize axial forces during short circuit situations.

This transformer provides owners with significant energy savings as well as offering environmental benefits. Higher efficiency not only extends the life of the transformer, but also turn into cost savings for owners in the form of lower energy bills and decreased cost of ownership. Integrated floor mounting brackets make installation fast and easy and the offset outward facing floor installation holes allow for easy power tool access.

Safety: The MT-DOE16-1P-208V-100KVA-120.240V-N3R is an isolation transformer which means that it provides operators with an increased level of protection against electric shock. An isolation transformer can also suppress electrical noise in sensitive devices and transfer power between two circuits which must not be connected. The MT-DOE16-1P-208V-100KVA-120.240V-N3R achieves these safety features by separating or "isolating" the powered device from the power source and insulation between the primary and secondary power sources.

Applications: General purposes.

Larson Electronics is a manufacturer and as such can build stationary and portable transformer systems to your specifications. Although we carry several models of power distribution transformer systems, we can deliver custom ordered units almost as quickly as our prebuilt units. If this model does not meet your needs, please contact us at 1-800-369-6671 or sales@larsonelectronics.com to discuss your specific requirements.

Wiring Diagram

WARNING: *DO NOT SERVICE WHILE ENERGIZED!*

MT-DOE16-1P-208V-100KVA-120.240V-N3R

VOLTAGE	TERMINAL	BRIDGING
208V+5%	H1-H2	1 TO 2
208V+2.5%	H1-H2	1 TO 4/ 2 TO 3
208V	H1-H2	3 TO 4
208V-2.5%	H1-H2	3 TO 6/ 4 TO 5
208V-5%	H1-H2	5 TO 6
208V-7.5%	H1-H2	5 TO 8/ 6 TO 7
208V-10%	H1-H2	7 TO 8
120V	X1-X2	X1-X4/X2-X3
240V	X1-X3	X2-X4

LARSON ELECTRONICS LLC • 9419 E US HWY 175 • KEMP, TX 75143
p: 1-800-369-6671 • intl: 903-498-3363 • f: 903-498-3364 • sales@larsonelectronics.com

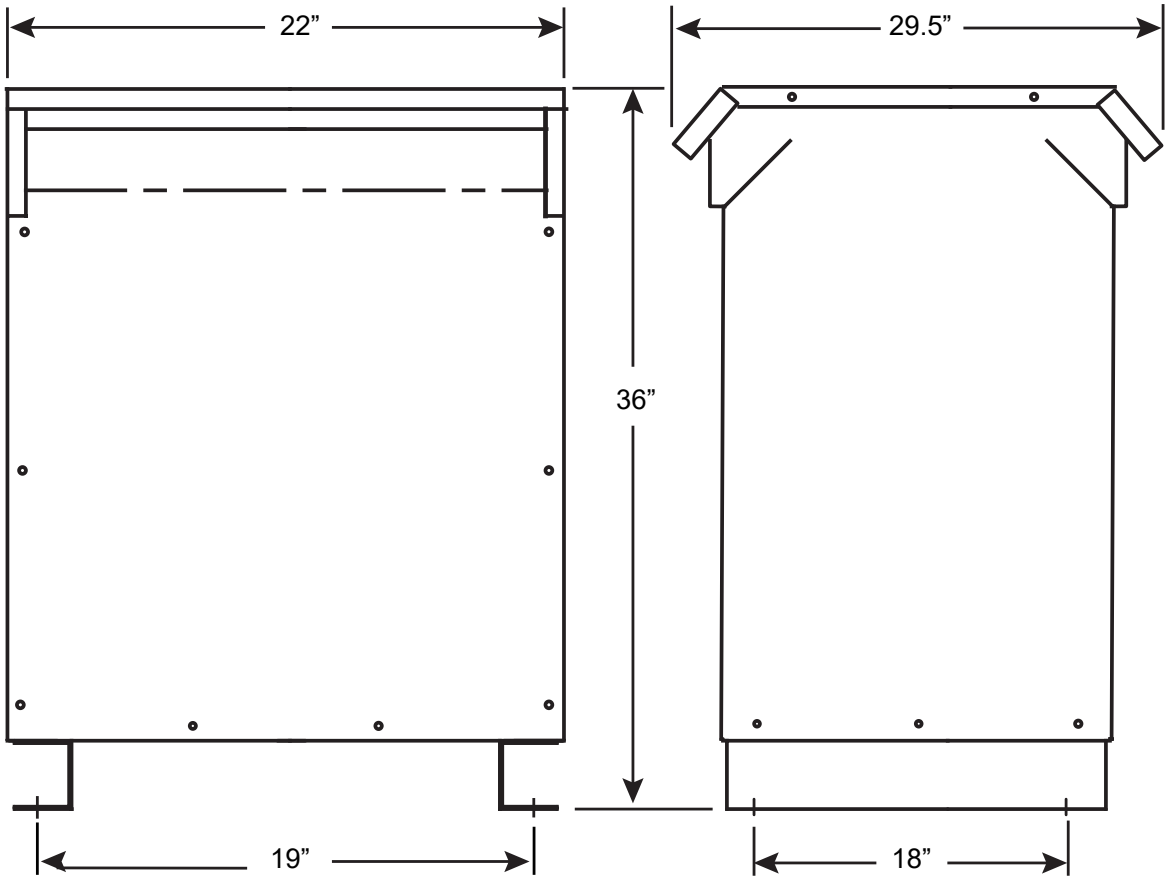

LARSON ELECTRONICS®

TITLE:

MT-DOE16-1P-208V-100KVA-120.240V-N3R

PROPRIETARY AND CONFIDENTIAL
THE INFORMATION CONTAINED IN THIS DRAWING IS THE SOLE PROPERTY OF LARSON ELECTRONICS LLC. ANY REPRODUCTION IN PART OR AS A WHOLE WITHOUT THE WRITTEN PERMISSION OF LARSON ELECTRONICS LLC IS PROHIBITED.

		NAME	SIZE	DWG. NO.	REV
DIMENSIONS ARE IN INCHES	DRAWN		A		
MATERIAL	CHECKED	JEREMY BLANKENSHIP			
DO NOT SCALE DRAWING					

5 4 3 2 1

Larson Electronics LLC
9419 E US HWY 175, Kemp, TX 75143
Phone: 800.369.6671

www.LarsonElectronics.com
Email: sales@LarsonElectronics.com
Fax: 903.765.7664

Larson Electronics LLC
9419 E US HWY 175, Kemp, TX 75143
Phone: 800.369.6671

www.LarsonElectronics.com
Email: sales@LarsonElectronics.com
Fax: 903.765.7664

Larson Electronics LLC
9419 E US HWY 175, Kemp, TX 75143
Phone: 800.369.6671

www.LarsonElectronics.com
Email: sales@LarsonElectronics.com
Fax: 903.765.7664

Larson Electronics LLC
9419 E US HWY 175, Kemp, TX 75143
Phone: 800.369.6671

www.LarsonElectronics.com
Email: sales@LarsonElectronics.com
Fax: 903.765.7664

Larson Electronics LLC
9419 E US HWY 175, Kemp, TX 75143
Phone: 800.369.6671

www.LarsonElectronics.com
Email: sales@LarsonElectronics.com
Fax: 903.765.7664

Frequently Asked Questions (FAQ)

There are no Faqs