Larson Electronics LLC
9419 E US HWY 175, Kemp, TX 75143
Phone: 800.369.6671

www.LarsonElectronics.com
Email: sales@LarsonElectronics.com
Fax: 903.765.7664

CGB-PXSS2K-NPB-32L-M32

Explosion Proof Cable Gland - M32 NPT - Nickel Plated Brass - ATEX Rated N4X 20.1MM-27.4MM Cable OD

Product ID: 153140



Image: CGB-PXSS2K-NPB-32L-M32

Larson Electronics LLC manufactures a wide variety of products, including custom built to spec designs. The pictures displayed for this unit are a general representation of form factor for the product line and may not accurately represent this exact configuration in every detail due to custom builds and changes between similar products in our standard catalog. The specifics for this configuration are listed in the specification table and supporting documentation (CAD files, Dimensional Drawing, Name Plate Diagram, Wiring Diagram, etc.). This means that specific details (receptacles, plugs, wires, connections, mounting brackets, external finishes, etc.) may not be accurately represented in images vs specifications. Please review specifications and do not order based solely on images.

CGB-PXSS2K-NPB-32L-M32 Cable Gland
Unit Type: Explosion Proof Cable Gland (Unarmored)
Weight: 0.99 lb
Entry Thread (Hub): M32
Minimum Thread Length: 15mm
Diameter Over Conductors: 23.6mm (Max)
Number of Conductors: 51 (Max)
Cable Diameter: 20.1mm (Min) to 27.4mm (Max)
Dims Across Flats: 46mm (Max)
Dims Across Corners: 51 mm (Max)
Nominal Protrusion Length: 69.5 mm
Operating Temp: -60°C to +100°C
Materials: Nickel Plated Brass, SS, Aluminum, Halogen Free Thermoplastic Elastomer (Seal)

Ratings
Zone 1, 2, 21, 22
ATEX Certified
IECEx, CSA Approved
INMETRO Approved
GOST R, GOST K Certified
Lloyds, DNV, ABS Approved
Rok, GGTN Permitted
IP66/IP67/IP68
NEMA 4X

Special Orders - Special Requirements

Contact us for special requirements

Toll Free: 1-800-369-6671
Intl: 1-903-270-1187
Fax: 1-903-765-7664
E-mail: sales@larsonelectronics.com

The Larson Electronics CGB-PXSS2K-NPB-32L-M32 Explosion Proof Cable Gland provides secure and safe cable connections in combustible facilities. This unarmored, triple certified flameproof cable gland is constructed of nickel plated brass and caters

to standard M32 hubs for connection.

The CGB-PXSS2K-NPB-32L-M32 is a heavy duty cable gland for flammable and rugged environments. This unarmored unit features a standard entry thread of M32. The ATEX-rated cable gland is constructed of nickel plated brass, stainless steel and aluminum. A halogen-free thermoplastic elastomer/barrier compound is used to seal the unit. The accessory is NEMA 4X rated and waterproof (IP66-IP68). This explosion proof cable gland is designed for use in environments ranging between -60°C to +100°C.

Applications: Mechanical cable retention, cable connections, cable fittings, explosive work sites, hazardous locations, instrumentation, telecommunication, cable management and more.

At Larson Electronics, we do more than meet your lighting needs. We also provide replacement, retrofit, and upgrade parts as well as industrial grade power accessories. Our craftsmen can custom build any lighting system and/or accessories to fit the unique demands of your operation. A commitment to honesty, quality, and dependability has made Larson Electronics a leader in the lighting and electronics business since 1973. Contact us today at 800-369-6671 or message sales@larsonelectronics.com for more information about our custom options tailored to meet your specific industry needs.

Larson Electronics LLC
9419 E US HWY 175, Kemp, TX 75143
Phone: 800.369.6671

www.LarsonElectronics.com
Email: sales@LarsonElectronics.com
Fax: 903.765.7664

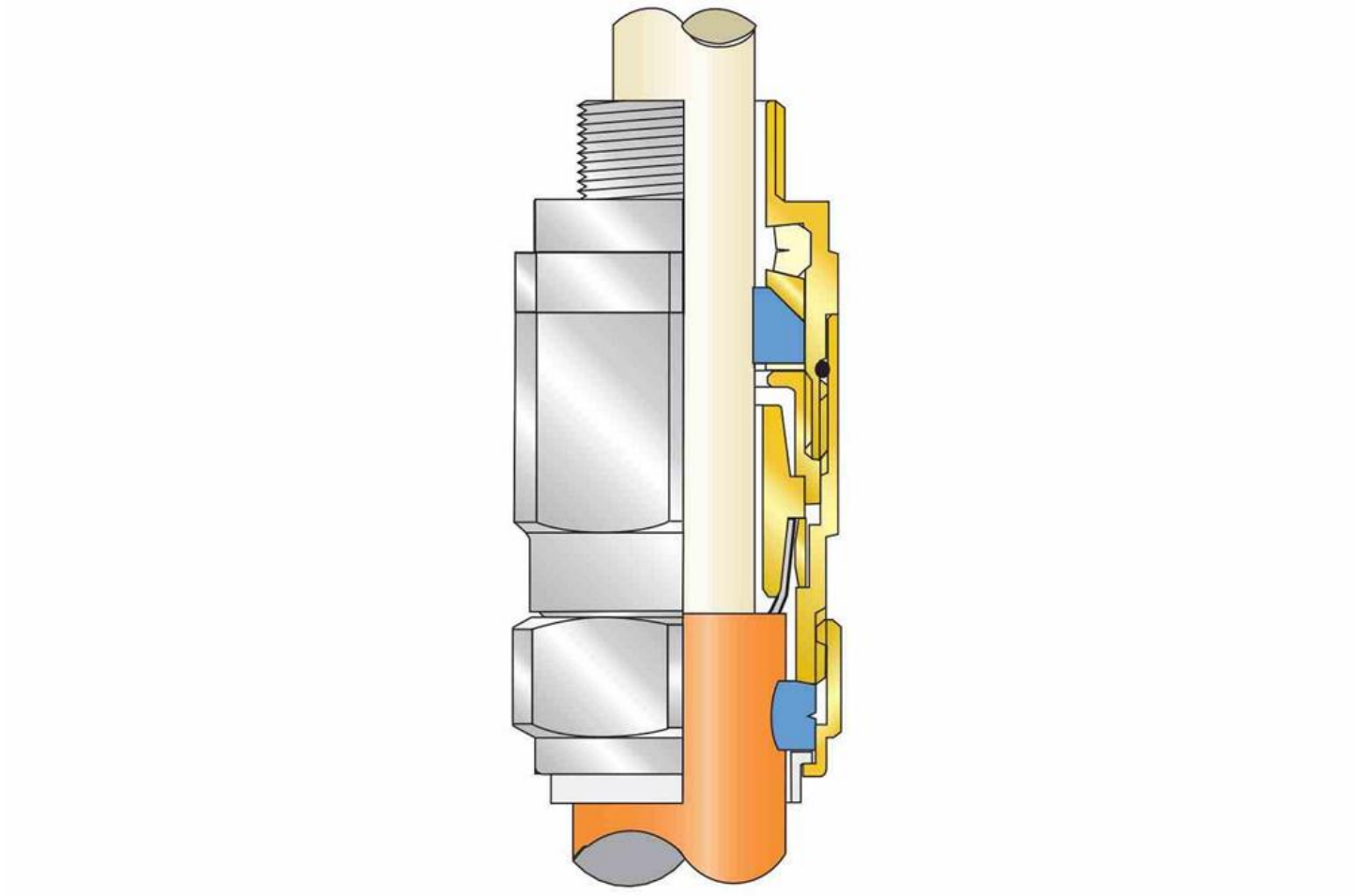

Certificate of Conformity

Manufacturer: Larson Electronics LLC
Address: 9419 US-HWY 175
Kemp, Texas 75143

Declare the following equipment conforms to the standard(s) as listed:

Model: CGB-PXSS2K
Description: Explosion Proof Cable Gland

Evaluated Listings:

UL: E201187 E253914 – NEC / United States standards
UL: E201187 – CEC / Canada standards
CSA: 2288626 – NEC / United States standards and CEC / Canada standards
ABS: 14-LD234401A-4-PDA – United States Marine standards
CML: 18ATEX1325X, 18ATEX4317X **–** ATEX standards
CML: IECEx CML 18.0182X – IEC Ex standards
Sira: 10Y9148U – IEC Ex standards
Sira: 10Y9147U – British standards
Sira: 10Y9147U – ATEX standards and IEC Ex standards
LR: 01/00172(E2) – IEC Ex standards, IEC Ex Marine standards
DNV: TAE00000Y – IEC Ex standards, IEC Ex Marine standards
TUV: TÜV 12.2073 X – INMETRO (Brazil) standards
RETIE: 03866 – Columbian EX standards
EAC: RU C-GB.AA87.B.00487 – Russian EX standards
UkrSEPRO: CU 19.0371X – Ukrainian EX standards
KCC: 14-GA4BO-0252X – Korean EX standards
CCOE / PESO: P444949 – Indian EX standards

The CGB-PXSS2K Series is certified to NEC, CEC, ATEX, and IEC Ex standards for hazardous locations.

The CGB-PXSS2K Series is comprised of a CMP PXSS2K series device. This assembly is built to NEC, CEC, ATEX, and IEC standards for hazardous locations.

Signed for and on behalf of: Larson Electronics, LLC
Place of issue: Kemp, TX

Signature: James Thomas

Name: James Thomas
Position: Operations Manager

LARSON ELECTRONICS LLC • 9419 E US HWY 175 • KEMP, TX 75143
p: 1-800-369-6671 • intl: 903-498-3363 • f: 903-498-3364 • sales@larsonelectronics.com

1 **CERTIFICATE OF CONFORMITY - Component**

2 Certificate Number: **Sira 10Y9147U** Issue: **0**

3 This Certificate is issued for the electrical component:

Industrial cable gland types:

A2, A2RC, C2K-GP, CXT, CW, CW CIEL, CX, E1W, E1W CIEL, E1X, E1U, E2W, E2W CIEL, E2X, E2U, SS2KGP, SS2KGP-PB, BW, BWL & BWL CIEL.

Insulated gland types:

B324, B348, B367, B368, B327, B350, B323 and B347, A324, A348, A367, A368, A327, A350, A323 and A347.

4 Manufactured by:

CMP Products
36 Nelson Way
Nelson Park East
Cramlington
NE23 1WH

5 This electrical component and any acceptable variation thereto is specified in the schedule to this Certificate and the documents therein referred to.

6 Sira Certification Service being an Approved Certification Body in accordance with Article 14 of Directive 76/117/EEC of the Council of the European Communities of 18 December 1975 certifies that the component has been found to comply with the following European Standards:

BS 6121:1989

The assessment and test results are recorded in Sira Test Reports listed in the Certificate Schedule.

7 The component marking shall include the code:

BS 6121
Type designation
Entry threadform and size

8 The manufacturer of the electrical component referred to in this Certificate has the responsibility to ensure that the component conforms to the specification laid down in the Schedule to this Certificate and has satisfied the routine verifications and tests referred to therein.

The use of this component will normally be the subject of National Legislation and/or Installation Codes.

File No. 21992
C. Index: 07

D R Stubbings BA MIET
Certification Manager

This certificate and its schedules may only be reproduced in its entirety and without change

UKAS PRODUCT CERTIFICATION
011

Sira Certification Service
Rake Lane, Eccleston, Chester, CH4 9JN, England

Tel: +44 (0) 1244 670900
Fax: +44 (0) 1244 681330
Email: info@siracertification.com
Web: www.siracertification.com

SCHEDULE

PRODUCT CONFORMITY CERTIFICATE Sira 10Y9147U **Issue** 0

COMPONENT

Each gland type comprises a metallic threaded component for fitting to appropriate electrical enclosures. Entry threads are available in various thread forms and sizes as detailed in the manufacturer's published data. Glands are appropriate to specific cable applications as below:

Gland type	Seals	Cable types
A2	Outer	A & B
A2RC	Outer	A (conduit connection)
BW	None	C
BWL & BWL CIEL	None	C
C2K-GP	Outer	B, C, D, E & F
CXT	Outer	B
CW & CW CIEL	Outer	C
CX	Outer	D, E & F
E1W & E1W CIEL	Inner & outer	C
E1X	Inner & outer	B, D, E & F
E1U	Inner & outer	C, D, E & F
E2W & E2W CIEL	Inner & outer	C & G
E2X	Inner & outer	B, D, E, F & G
E2U	Inner & outer	B, C, D, E, F & G
SS2KGP	Inner & outer	A
SS2KGP-PB	Dual seal with lead clamp	A & G
B324, B348, A324, A348	Outer	C
B367, B368, A367, A368	Outer	B,D,E
B327, B350, A327, A350	Outer	C
B323, B347, A323, A347	Outer	C

Designation	Cable type
A	Non-armoured
B	Braided
C	Single wire armour
D	Steel tape armour
E	Strip armour
F	Pliable wire armour
G	Lead sheath

DESCRIPTIVE DOCUMENTS

See Certificate Annexe

ASSOCIATED SIRA REPORTS AND CERTIFICATE HISTORY

Issue	Date	Report no.	Comment
0	11 May 2010	R21992A/00	The release of the prime certificate.

This certificate and its schedules may only be reproduced in its entirety and without change

UKAS PRODUCT CERTIFICATION 011

Sira Certification Service
Rake Lane, Eccleston, Chester, CH4 9JN, England
Tel: +44 (0) 1244 670900
Fax: +44 (0) 1244 681330
Email: info@siracertification.com
Web: www.siracertification.com

SCHEDULE

PRODUCT CONFORMITY CERTIFICATE Sira 10Y9147U **Issue** 0

CONDITIONS OF MANUFACTURE

1 The use of the Sira Certification Service Mark is subject to the Regulations applicable to the holders of SCS certificates.

2 This certificate relates only to the component specified herein as executed in the samples supplied for evaluation.

3 In affixing the Sira certificate number to the component the manufacturer attests on its own responsibility that the component conforms to the documents listed herein.

If the marked component is found not to comply Sira Certification Service should be notified immediately at its office at South Hill, Chislehurst, Kent BR7 5EH, England.

4 The component and that part of the manufacturer's quality management system controlling the production of the component covered by this certificate shall be subject to periodic surveillance by Sira in accordance with the Regulations applicable to the holders of SCS certificates.

5 Component shall be marked with the following text:

BS 6121
Type designation
Entry threadform and size.

SPECIAL CONDITIONS FOR SAFE USE (denoted by 'X' after certificate No.)

None

This certificate and its schedules may only be reproduced in its entirety and without change

UKAS PRODUCT CERTIFICATION 011

Sira Certification Service
Rake Lane, Eccleston, Chester, CH4 9JN, England

Tel: +44 (0) 1244 670900
Fax: +44 (0) 1244 681330
Email: info@siracertification.com
Web: www.siracertification.com

Certificate Annexe

Certificate Number: **Sira 10Y9147U**

Component: **Industrial cable glands and Insulated glands**

Applicant: **CMP Products**

Issue 0 There are no drawings associated with this certificate.

This certificate and its schedules may only be reproduced in its entirety and without change.

Sira Certification Service
Rake Lane, Eccleston, Chester, CH4 9JN, England

Tel: +44 (0) 1244 670900
Fax: +44 (0) 1244 681330
Email: info@siracertification.com
Web: www.siracertification.com

UKAS PRODUCT CERTIFICATION
011

1 **CERTIFICATE OF CONFORMITY - Component**

2 Certificate Number: **Sira 10Y9148U** Issue: **3**

3 This Certificate is issued for the electrical component:

Industrial cable gland types:
A2, A2RC, C2K-GP, CXT, CW, CW CIEL, CX, E1W, E1W CIEL, E1X, E1U, E2W, E2W CIEL, E2X, E2U, SS2KGP, SS2KGP-PB, A324, A348, A367, A368, A327, A350, A323, A347, B324, B348, B367, B368, B327, B350, B323 and B347

4 Manufactured by:

CMP Products
36 Nelson Way
Nelson Park East
Cramlington NE23 1WH
UK

5 This electrical component and any acceptable variation thereto is specified in the schedule to this Certificate and the documents therein referred to.

6 Sira Certification Service being an Approved Certification Body in accordance with Article 14 of Directive 76/117/EEC of the Council of the European Communities of 18 December 1975 certifies that the component has been found to comply with the following European Standards:

EN 62444:2013 IEC 62444:2010 Ed 1

The above list of documents may detail standards that do not appear on the UKAS Scope of Accreditation, but have been added through Sira's flexible scope of accreditation, which is available on request.

The assessment and test results are recorded in Sira Test Reports listed in the Certificate Schedule.

7 The component marking shall include the code:

EN 62444:2013 and/or IEC 62444
Type designation
Entry threadform and size

8 The manufacturer of the electrical component referred to in this Certificate has the responsibility to ensure that the component conforms to the specification laid down in the Schedule to this Certificate and has satisfied the routine verifications and tests referred to therein.

The use of this component will normally be the subject of National Legislation and/or Installation Codes.

File No. 70006933

C Ellaby
Deputy Certification Manager

This certificate and its schedules may only be reproduced in its entirety and without change

UKAS PRODUCT CERTIFICATION
011

Sira Certification Service
Rake Lane, Eccleston, Chester, CH4 9JN, England

Tel: +44 (0) 1244 670900
Fax: +44 (0) 1244 681330
Email: info@siracertification.com
Web: www.siracertification.com

SCHEDULE

CERTIFICATE OF CONFORMITY **Sira 10Y9148U**
Issue 3

COMPONENT

Each gland type comprises a metallic threaded component for fitting to appropriate electrical enclosures. Entry threads are available in various thread forms and sizes as detailed in the manufacturer's published data. Glands are appropriate to specific cable applications as below:

Gland type	Seals	Designation of cable type (see below)	Cable retention Class (EN/IEC 62444)	
			Unarmoured cable	Armoured cable
A2	Outer	A & B	B	
A2RC	Outer	A (conduit connection)	B	
C2K-GP	Outer	B, C, D, E & F		D
CXT	Outer	B	B	
CW & CW CIEL	Outer	C		D
CX	Outer	D, E & F		D
E1W & E1W CIEL	Inner & outer	C		D
E1X	Inner & outer	B, D, E & F		D
E1U	Inner & outer	C, D, E & F		D
E2W & E2W CIEL	Inner & outer	C & G		D
E2X	Inner & outer	B, D, E, F & G		D
E2U	Inner & outer	B, C, D, E, F & G		D
SS2KGP	Inner & outer	A	B	
SS2KGP-PB	Dual seal with lead clamp	A & G	B	
B324, B348, A324, A348	Outer	C		D
B367, B368, A367, A368	Outer	B,D,E		D
B327, B350, A327, A350	Outer	C		D
B323, B347, A323, A347	Outer	C		D

Designation	Cable type
A	Non-armoured
B	Braided
C	Single wire armour
D	Steel tape armour
E	Strip armour
F	Pliable wire armour
G	Lead sheath

This certificate and its schedules may only be reproduced in its entirety and without change.

UKAS PRODUCT CERTIFICATION 011

Sira Certification Service
Rake Lane, Eccleston, Chester, CH4 9JN, England
Tel: +44 (0) 1244 670900
Fax: +44 (0) 1244 681330
Email: info@siracertification.com
Web: www.siracertification.com

SCHEDULE

CERTIFICATE OF CONFORMITY **Sira 10Y9148U**
Issue 3

Variation 1 - This variation introduced the following change:

i. The Cable Gland Designs were assessed against IEC 62444:2010 Ed 1, thereby permitting the inclusion of the insulated glands into the table above.

Variation 2 - This variation introduced the following change:

i. The Cable Gland Designs C2K-GP, CW, CW CIEL, CX, E1W, E1W CIEL, E1X, E1U, E2W, E2W CIEL, E2X, and E2U utilising cable anchoring of armoured cables were tested against IEC 62444:2010 Ed 1 Type D, thereby permitting the armour clamping glands to be referenced as Type D in the table in the product description.

ii. The Cable Gland Designs A2, A2RC, CXT, SS2KGP and SS2KGP-PB utilising cable anchoring of unarmoured cables were tested against IEC 62444:2010 Ed 1 Type B, thereby permitting the unarmoured clamping glands to be referenced as Type B in the table in the product description.

Variation 3 - This variation introduced the following changes:

i. Following appropriate assessment to demonstrate compliance with the latest technical knowledge, the document previously listed in section 6, EN 50262: 1998 + Amendment 2001, was replaced by EN 62444:2013 Ed 1, the markings in section 7 were updated accordingly and the conditions of manufacture were amended to recognise the new standard.

DESCRIPTIVE DOCUMENTS

There are no drawings associated with this Certificate.

ASSOCIATED SIRA REPORTS AND CERTIFICATE HISTORY

Issue	Date	Report no.	Comment
0	11 May 2010	R21992A/00	The release of the prime certificate.
1	17 August 2011	R25736A/00	The introduction of Variation 1.
2	31 July 2013	R28132A/00	The introduction of Variation 2.
3	28 July 2014	R70006933A	The introduction of Variation 3.

CONDITIONS OF MANUFACTURE

1 The use of the Sira Certification Service Mark is subject to the Regulations applicable to the holders of SCS certificates.

2 This certificate relates only to the component specified herein as executed in the samples supplied for evaluation.

3 In affixing the Sira certificate number to the component the manufacturer attests on its own responsibility that the component conforms to the documents listed herein.

If the marked component is found not to comply Sira Certification Service should be notified immediately at its office at Rake Lane, Eccleston, Chester CH4 9JN, England.

4 The component and that part of the manufacturer's quality management system controlling the production of the component covered by this certificate shall be subject to periodic surveillance by Sira in accordance with the Regulations applicable to the holders of SCS certificates.

5 Component shall be marked with the following text:

EN 62444 and/or IEC 62444
Type designation
Entry threadform and size.

SPECIAL CONDITIONS FOR SAFE USE (denoted by 'X' after certificate No.)

None

This certificate and its schedules may only be reproduced in its entirety and without change.

UKAS PRODUCT CERTIFICATION
011

Sira Certification Service
Rake Lane, Eccleston, Chester, CH4 9JN, England
Tel: +44 (0) 1244 670900
Fax: +44 (0) 1244 681330
Email: info@siracertification.com
Web: www.siracertification.com

Lloyd's Register

Type Approval Certificate Extension

This is to certify that Certificate No. 01/00172(E2) for the undernoted products is extended and renumbered as shown.

This certificate is issued to:

PRODUCER

CMP PRODUCTS
Glasshouse Street
St. Peters
Newcastle-Upon-Tyne, NE6 1BE
United Kingdom (UK)

PLACE OF PRODUCTION

36, Nelson Road
Nelson Park East
Cramlington
Northumberland, NE23 1WH
United Kingdom (UK)

DESCRIPTION

Cable glands for hazardous areas in Marine, offshore and Industrial use

TYPE	STANDARD	APPLICATION
C**	IEC 60079-0:2004, IEC 60079-7:2006, IEC 61241-0:2004, IEC 61241-1:2004	Zones 1 and 2
E**	IEC 60079-0:2004, IEC 60079-1:2007, IEC 60079-15:2005, IEC 60079-7:2006, IEC 61241-0:2004, IEC 61241-1:2004	Flameproof, Zones 1 and 2
A2E	IEC 60079-0:2004, IEC 60079-1: 2007, IEC 60079-15:2005, IEC 60079-7:2006, IEC 61241-0:2004, IEC 61241-1:2004	Flameproof, Zones 1 and 2
A2F	IEC 60079-0:2004, IEC 60079-1:2007, IEC 60079-15:2005, IEC 60079-7:2006, IEC 61241-0:2004, IEC 61241-1:2004	Flameproof, Zones 1 and 2
A2F-FC	IEC 60079-0:2004, IEC 60079-1:2007, IEC 60079-15:2005, IEC 60079-7:2006, IEC 61241-0:2004, IEC 61241-1:2004	Flameproof, Zones 1 and 2

Certificate No. 01/00172(E3)

Issue Date 28 March 2014

Expiry Date 8 December 2016

Sheet 1 of 2

L. Green
Marine Technology & Engineering Services, Southampton
Lloyd's Register EMEA

Lloyd's Register EMEA
71 Fenchurch Street, London EC3M 4BS

Lloyd's Register EMEA
Is a subsidiary of Lloyd's Register Group

Lloyd's Register Group Limited, its affiliates and subsidiaries and their respective officers, employees or agents are, individually and collectively, referred to in this clause as the 'Lloyd's Register'. Lloyd's Register assumes no responsibility and shall not be liable to any person for any loss, damage or expense caused by reliance on the information or advice in this document or howsoever provided, unless that person has signed a contract with the relevant Lloyd's Register entity for the provision of this information or advice and in that case any responsibility or liability is exclusively on the terms and conditions set out in that contract.

TC	IEC 60079-0:2007, IEC 60079-1:2007 IEC 60079-7:2006, IEC 61241-1:2004	Flameproof, Zones 1 and 2
A2FRC	IEC 60079-0:2004, IEC 60079-1:2007, IEC 60079-15:2005, IEC 60079-7:2006, IEC 61241-0:2004, IEC 61241-1:2004	Flameproof, Zones 1 and 2
PX**	IEC 60079-0:2004, IEC 60079-1:2007, IEC 60079-7:2006, IEC 60079-15:2005, IEC 61241-0:2004, IEC 61241-1:2004	Flameproof, Zones 1 and 2
TMC	IEC 60079-0:2004, IEC 60079-7:2006, IEC 61241-0:2004, IEC 61241-1:2004	Zones 1 and 2
TMCX	IEC 60079-0:2004, IEC 60079-1:2003, IEC 60079-7:2006, IEC 61241-0:2004, IEC 61241-1:2004	Flameproof, Zones 1 and 2
TMC2	IEC 60079-0:2007, IEC 60079-7:2006, IEC 61241-1:2004	Zones 1 and 2
TMC2X	IEC 60079-0:2007, IEC 60079-1:2007, IEC 60079-7:2006, IEC 61241-1:2004	Flameproof, Zones 1 and 2
SS2K, SS2K/PB	IEC 60079-0:2004, IEC 60079-1:2007, IEC 60079-7:2006, IEC 60079-15:2005, IEC 61241-0:2004, IEC 61241-1:2004	Flameproof, Zones 1 and 2
T3CDS, T3CDS/PB	EN 60079-0:2006, EN 60079-7:2007, EN 60079-1:2007, EN 61241-0:2004, EN 61241-1:2004	Flameproof, Zones 1 and 2
TE1FU	EN 60079-0:2004, EN 60079-1:2007, EN 60079-15:2005, EN 60079-7:2006, EN 61241-0:2004, EN 61241-1:2004	Flameproof, Zones 1 and 2
A2PE(V-TEC)	EN 50014:1997, EN 50019:1994	Zones 1 and 2

"This Certificate is not valid for equipment, the design, ratings or operating parameters of which have been varied from the specimen tested. The manufacturer should notify Lloyd's Register EMEA of any modification or changes to the equipment in order to obtain a valid certificate."
The attached Design Appraisal Document No. 01/00172(E3) *and its supplementary Type Approval Terms and Conditions form part of this Certificate.*
All other details remain as the previous Certificate No. 01/00172(E2) to which this extension should be attached.

Certificate No. 01/00172(E3)

Issue Date 28 March 2014

Expiry Date 8 December 2016

Sheet 2 of 2

L. Green
Marine Technology & Engineering Services, Southampton
Lloyd's Register EMEA

Lloyd's Register EMEA
71 Fenchurch Street, London EC3M 4BS

Lloyd's Register EMEA
Is a subsidiary of Lloyd's Register Group

Lloyd's Register Group Limited, its affiliates and subsidiaries and their respective officers, employees or agents are, individually and collectively, referred to in this clause as the 'Lloyd's Register'. Lloyd's Register assumes no responsibility and shall not be liable to any person for any loss, damage or expense caused by reliance on the information or advice in this document or howsoever provided, unless that person has signed a contract with the relevant Lloyd's Register entity for the provision of this information or advice and in that case any responsibility or liability is exclusively on the terms and conditions set out in that contract.

Lloyd's Register

Type Approval Certificate Extension

This is to certify that Certificate No. 01/00172(E2) for the undernoted products is extended and renumbered as shown.

This certificate is issued to:

PRODUCER

CMP PRODUCTS
Glasshouse Street
St. Peters
Newcastle-Upon-Tyne, NE6 1BE
United Kingdom (UK)

PLACE OF PRODUCTION

36, Nelson Road
Nelson Park East
Cramlington
Northumberland, NE23 1WH
United Kingdom (UK)

DESCRIPTION

Cable glands for hazardous areas in Marine, offshore and Industrial use

TYPE	STANDARD	APPLICATION
C**	IEC 60079-0:2004, IEC 60079-7:2006, IEC 61241-0:2004, IEC 61241-1:2004	Zones 1 and 2
E**	IEC 60079-0:2004, IEC 60079-1:2007, IEC 60079-15:2005, IEC 60079-7:2006, IEC 61241-0:2004, IEC 61241-1:2004	Flameproof, Zones 1 and 2
A2E	IEC 60079-0:2004, IEC 60079-1: 2007, IEC 60079-15:2005, IEC 60079-7:2006, IEC 61241-0:2004, IEC 61241-1:2004	Flameproof, Zones 1 and 2
A2F	IEC 60079-0:2004, IEC 60079-1:2007, IEC 60079-15:2005, IEC 60079-7:2006, IEC 61241-0:2004, IEC 61241-1:2004	Flameproof, Zones 1 and 2
A2F-FC	IEC 60079-0:2004, IEC 60079-1:2007, IEC 60079-15:2005, IEC 60079-7:2006, IEC 61241-0:2004, IEC 61241-1:2004	Flameproof, Zones 1 and 2

Certificate No. 01/00172(E3)

Issue Date 28 March 2014

Expiry Date 8 December 2016

Sheet 1 of 2

L. Green
Marine Technology & Engineering Services, Southampton
Lloyd's Register EMEA

Lloyd's Register EMEA
71 Fenchurch Street, London EC3M 4BS

Lloyd's Register EMEA
Is a subsidiary of Lloyd's Register Group

Lloyd's Register Group Limited, its affiliates and subsidiaries and their respective officers, employees or agents are, individually and collectively, referred to in this clause as the 'Lloyd's Register'. Lloyd's Register assumes no responsibility and shall not be liable to any person for any loss, damage or expense caused by reliance on the information or advice in this document or howsoever provided, unless that person has signed a contract with the relevant Lloyd's Register entity for the provision of this information or advice and in that case any responsibility or liability is exclusively on the terms and conditions set out in that contract.

TC	IEC 60079-0:2007, IEC 60079-1:2007 IEC 60079-7:2006, IEC 61241-1:2004	Flameproof, Zones 1 and 2
A2FRC	IEC 60079-0:2004, IEC 60079-1:2007, IEC 60079-15:2005, IEC 60079-7:2006, IEC 61241-0:2004, IEC 61241-1:2004	Flameproof, Zones 1 and 2
PX**	IEC 60079-0:2004, IEC 60079-1:2007, IEC 60079-7:2006, IEC 60079-15:2005, IEC 61241-0:2004, IEC 61241-1:2004	Flameproof, Zones 1 and 2
TMC	IEC 60079-0:2004, IEC 60079-7:2006, IEC 61241-0:2004, IEC 61241-1:2004	Zones 1 and 2
TMCX	IEC 60079-0:2004, IEC 60079-1:2003, IEC 60079-7:2006, IEC 61241-0:2004, IEC 61241-1:2004	Flameproof, Zones 1 and 2
TMC2	IEC 60079-0:2007, IEC 60079-7:2006, IEC 61241-1:2004	Zones 1 and 2
TMC2X	IEC 60079-0:2007, IEC 60079-1:2007, IEC 60079-7:2006, IEC 61241-1:2004	Flameproof, Zones 1 and 2
SS2K, SS2K/PB	IEC 60079-0:2004, IEC 60079-1:2007, IEC 60079-7:2006, IEC 60079-15:2005, IEC 61241-0:2004, IEC 61241-1:2004	Flameproof, Zones 1 and 2
T3CDS, T3CDS/PB	EN 60079-0:2006, EN 60079-7:2007, EN 60079-1:2007, EN 61241-0:2004, EN 61241-1:2004	Flameproof, Zones 1 and 2
TE1FU	EN 60079-0:2004, EN 60079-1:2007, EN 60079-15:2005, EN 60079-7:2006, EN 61241-0:2004, EN 61241-1:2004	Flameproof, Zones 1 and 2
A2PE(V-TEC)	EN 50014:1997, EN 50019:1994	Zones 1 and 2

"This Certificate is not valid for equipment, the design, ratings or operating parameters of which have been varied from the specimen tested. The manufacturer should notify Lloyd's Register EMEA of any modification or changes to the equipment in order to obtain a valid certificate."
The attached Design Appraisal Document No. 01/00172(E3) *and its supplementary Type Approval Terms and Conditions form part of this Certificate.*
All other details remain as the previous Certificate No. 01/00172(E2) to which this extension should be attached.

Certificate No. 01/00172(E3)

Issue Date 28 March 2014

Expiry Date 8 December 2016

Sheet 2 of 2

L. Green
Marine Technology & Engineering Services, Southampton
Lloyd's Register EMEA

Lloyd's Register EMEA
71 Fenchurch Street, London EC3M 4BS

Lloyd's Register EMEA
Is a subsidiary of Lloyd's Register Group

Lloyd's Register Group Limited, its affiliates and subsidiaries and their respective officers, employees or agents are, individually and collectively, referred to in this clause as the 'Lloyd's Register'. Lloyd's Register assumes no responsibility and shall not be liable to any person for any loss, damage or expense caused by reliance on the information or advice in this document or howsoever provided, unless that person has signed a contract with the relevant Lloyd's Register entity for the provision of this information or advice and in that case any responsibility or liability is exclusively on the terms and conditions set out in that contract.

ТАМОЖЕННЫЙ СОЮЗ

СЕРТИФИКАТ СООТВЕТСТВИЯ

EAC

№ ТС **RU C-GB.AA87.B.00487**

Серия RU № 0459242

ОРГАН ПО СЕРТИФИКАЦИИ **Орган по сертификации взрывозащищенного и рудничного оборудования (ОС ЦСВЭ) Общества с ограниченной ответственностью «Центр по сертификации взрывозащищенного и рудничного оборудования» (ООО «НАНИО ЦСВЭ»), Россия, 140004, Московская область, город Люберцы, поселок ВУГИ, ОАО «Завод «ЭКОМАШ». Телефон/факс: +7(495)558-81-41, +7(495) 558-83-53. Адрес электронной почты: ccve@ccve.ru Аттестат № RA.RU.11AA87 от 20.07.2015 выдан Федеральной службой по аккредитации**

ЗАЯВИТЕЛЬ **Общество с ограниченной ответственностью «СМП ПРОДАКТС», Адрес местонахождения: Россия, 115280, Москва, улица Ленинская Слобода, дом 26, строение 28. ОГРН: 1167746785535. Телефон/факс: +7 926 734 1535. Адрес электронной почты: Yuri.Savushkin@cmp-products.com**

ИЗГОТОВИТЕЛЬ **CMP Products LTD, 36, Nelson Way, Nelson Park East, Cramlington, Northumberland, NE23 1 WH, Великобритания**

ПРОДУКЦИЯ **Взрывозащищенные кабельные вводы, взрывозащищенные дыхательно/дренажные заглушки и адаптеры, переходные муфты, соединения, и аксессуары к ним с Ex-маркировкой согласно приложению (см. бланки №№ 0318959, 0318960, 0318961, 0318987, 0318963, 0318964, 0318965, 0318966, 0318967, 0318968). Серийный выпуск.**

КОД ТН ВЭД ТС **8536 90 1000**

СООТВЕТСТВУЕТ ТРЕБОВАНИЯМ **ТР ТС 012/2011 «О безопасности оборудования для работы во взрывоопасных средах».**

СЕРТИФИКАТ ВЫДАН НА ОСНОВАНИИ **Протокола оценки и испытаний № 141.2016-Т от 15.12.2016 Испытательной лаборатории взрывозащищенного и рудничного оборудования (ИЛ ЦСВЭ) Общества с ограниченной ответственностью «Центр по сертификации взрывозащищенного и рудничного оборудования (ООО «НАНИО ЦСВЭ») (аттестат № RA.RU.21АК06 от 19.01.2016); Акта о результатах анализа состояния производства № 157-А/16 от 09.12.2016 Органа по сертификации взрывозащищенного и рудничного оборудования (ОС ЦСВЭ) Общества с ограниченной ответственностью «Центр по сертификации взрывозащищенного и рудничного оборудования» (ООО «НАНИО ЦСВЭ») (аттестат № RA.RU.11AA87 выдан 20.07.2015). Схема сертификации – 1с.**

ДОПОЛНИТЕЛЬНАЯ ИНФОРМАЦИЯ

Перечень стандартов – см. приложение, бланк № 0318965.
Условия и срок хранения указаны в технической документации.
Назначенный срок службы – 20 лет.

СРОК ДЕЙСТВИЯ С **08.02.2017** ПО **07.02.2022** ВКЛЮЧИТЕЛЬНО

М.П.

Руководитель (уполномоченное лицо) органа по сертификации _____ (подпись) **А.А. Коган** (инициалы, фамилия)

Эксперт (эксперт-аудитор) (эксперты (эксперты-аудиторы)) _____ (подпись) **Н.Н. Преловский** (инициалы, фамилия)

Бланк изготовлен ЗАО "ОПЦИОН", www.opcion.ru (лицензия № 05-05-09/003 ФНС РФ), тел. (495) 726 4742, Москва, 2013

ТОВ «СЕРТІС-ЦЕНТР»
ОРГАН З ОЦІНКИ ВІДПОВІДНОСТІ ПРОДУКЦІЇ (призначений за реєстраційним номером UA.TR.115)
09113, Україна, Київська обл., м. Біла Церква, вул. Фастівська 23,
Тел./факс: +38 (0456) 381-700, E-mail: info@sertis.com.ua, Web: www.sertis.com.ua

(1) # СЕРТИФІКАТ ЕКСПЕРТИЗИ ТИПУ

(2) **Технічний регламент обладнання та захисних систем, призначених для використання в потенційно вибухонебезпечних середовищах (постанова КМУ від 28 грудня 2016 р. № 1055)**

(3) Номер сертифіката: **СЦ 19.0371 X** Номер видання: **0**

(4) Обладнання: **Кабельні вводи за переліком у Додатку**

(5) Заявник: **ТОВ "Корпус Груп",**
Україна, 76008, Івано-Франківська обл., місто Івано-Франківськ,
вул. Федьковича, будинок 111, код ЄДРПОУ 39578953

(6) Виробник: **CMP Products Ltd., 36 Nelson Way, Nelson Park East, Cramlington,**
Northumberland, NE23 1WH, UK - Велика Британія

(7) Опис обладнання та його припустимих варіацій, а також документація, на яку даються посилання, наведені у додатку до сертифіката.

(8) ТОВ «СЕРТІС-ЦЕНТР», орган з оцінки відповідності за реєстраційним номером UA.TR.115, призначений виконувати роботи з оцінки відповідності продукції вимогам Технічного регламенту, затвердженого постановою КМУ від 28 грудня 2016 р. № 1055, посвідчує, що була встановлена відповідність вказаного обладнання суттєвим вимогам стосовно захисту здоров'я та безпеки відносно технічного проекту та конструкції обладнання, призначеного для використання в потенційно вибухонебезпечних середовищах, які наведені в Технічному регламенті.
Результати досліджень та випробувань наведені в протоколі оцінки № 398/ОВ-19 від 18.03.2019 р.

(9) Відповідність обладнання суттєвим вимогам стосовно захисту здоров'я та безпеки була забезпечена виконанням вимог наступних стандартів:

ДСТУ EN 60079-0:2017 (зі зміною 11:2017), ДСТУ EN 60079-1:2017,
ДСТУ EN 60079-7:2017, ДСТУ EN 60079-15:2017, ДСТУ EN 60079-31:2017

(10) Якщо в кінці номера сертифіката присутній знак «X», то це посвідчує, що до обладнання застосовуються особливі умови використання, які наведені у додатку до цього сертифіката.

(11) Цей сертифікат виданий внаслідок проведення оцінки відповідності за Модулем В (експертиза типу) згідно з Технічним регламентом та стосується лише технічного проекту та конструкції зазначеного обладнання згідно з узгодженою технічною документацією. Введення в обіг зазначеного обладнання згідно з Технічним регламентом можливо лише за умови застосування додаткових модулів оцінки відповідності.

(12) Маркування обладнання повинно містити наступне:

Ex **згідно з Додатком, таблиця 1**

Керівник органу з оцінки відповідності К.В. Меженков

МП

м. Біла Церква, 19.03.2019 р.

Цей сертифікат з додатком може бути відтворений лише повністю та без змін.

CORPORACIÓN CENTRO DE INVESTIGACIÓN Y
DESARROLLO TECNOLÓGICO DEL SECTOR ELÉCTRICO

CERTIFICADO DE CONFORMIDAD DE PRODUCTO

PRODUCT CONFORMITY CERTIFICATE

Esquema de Certificación
Certification Scheme
Marca de Conformidad
Esquema 5

No. 03866

La Corporación Centro de Investigación y Desarrollo Tecnológico del Sector Eléctrico – CIDET certifica que el producto:

CIDET certifies that the product:

DENOMINACIÓN	TIPO	REFERENCIA
ACCESORIOS PARA INSTALACIÓN EN ZONAS ESPECIALES	A PRUEBA DE EXPLOSIÓN, CLASIFICACIÓN Ex d, PROTECCIÓN AUMENTADA Ex e Y RESTRICCIÓN AL INGRESO DE GASES Ex nR.	VER ANEXO

Las características e identificación de este producto se describen en el documento anexo, que hace parte integral del presente CERTIFICADO y contiene una página.

The characteristics and identification of this product are described in the attached document, which is an integral part of this CERTIFICATE

Fabricado por:
Manufactured by:

CMP PRODUCTS LIMITED

36 Nelson Way, Nelson Park East (4), Cramlington, United Kingdom (GB)

Satisface los requerimientos de
Satisfies the requirements of

RESOLUCIÓN 90708 de 2013 del MINISTERIO DE MINAS Y ENERGÍA – RETIE (Numeral 20.28)

Fecha de Certificación: 09 / 08 / 2010
Última Actualización: 02 / 05 / 2016
Fecha de Seguimiento: 28 / 02 / 2019

tima para las próximas auditorias de seguimiento: 28 / 01 / 2017 y 28 / 01 / 2018

Sandra Lucía Loaiza Ríos
Representante Legal Suplente
Deputy Legal Representative

ealiza la verificación y el seguimiento a las características del producto que dieron origen a ésta certificación.
Las novedades y vigencia de este certificado, pueden ser consultadas en la página www.cidet.org.co

ET makes the verification and follow up the characteristics of the product that gave rise to this certification.
On page www.cidet.org.co, you can find news and validity of this certificate.

ONAC
ISO/IEC 17065:2012
09-CPR-004

Medellín: Carrera 46 No. 56-11 (Av. Oriental), Piso 13 **Tel:** (+574) 444 12 11 **Fax:** (+574) 444 0460

CIDET

ONAC

ACREDITADO ISO/IEC 17065:2012 09-CPR-004

ORGANISMO CERTIFICADOR DE PRODUCTOS

CERTIFICADO DE CONFORMIDAD DE PRODUCTO Nro. 03866

FECHA DE CERTIFICACIÓN: 09 / 08 /2010
ÚLTIMA ACTUALIZACIÓN: 02 / 05 / 2016
FECHA DE SEGUIMIENTO: 28 / 02 / 2019

ANEXO DE CARACTERÍSTICAS E IDENTIFICACIÓN DE ACCESORIOS PARA INSTALACIÓN EN ZONAS ESPECIALES FABRICADOS POR CMP PRODUCTS LIMITED UBICADA EN EL 36 NELSON WAY, NELSON PARK EAST (4), CRAMLINGTON, UNITED KINGDOM (GB)

Tipo	A prueba de explosión, clasificación Ex d, Protección aumentada Ex e y restricción al ingreso de gases Ex nR.
Referencia	Prensaestopas:A2F, A2FRC, A2RC, A2F-FC, SS2K, SS2KPB, C**, E**, PX**, T3CDS y T3CDS/PB, TMC, TMC2, TMC2X, TMCX, TC, TE1FU
	Adaptadores/ reductores: 737
	Tapones: 747, 757, 767.
	Adaptadores aislados: 777
	Uniones: 780, 784,789, PX780,PX784,PX789
	Respiradores/drenadores: 781D, 781E.
	Adaptadores de 90º: 787.
	Adaptadores: 797 y MA/FT.
	Accesorios de adaptación. Bridas Ciegas: MA/B.
Referencial	RESOLUCIÓN 90708 de 2013 del MINISTERIO DE MINAS Y ENERGÍA – RETIE (Numeral 20.28)

Atentamente,

Sandra Lucía Loaiza Ríos
Representante Legal Suplente

DRIOS

제14-0252호

안 전 인 증 서

CMP Products Limited

Glasshouse Street, St Peters, Newcastle upon Tyne,
NE6 1BE, United Kingdom

위 사업장에서 제조하는 아래의 품목이 「산업안전보건법」 제34조 및 같은 법 시행규칙 제58조의4제4항에 따른 안전인증 심사 결과 안전·보건기준에 적합하므로 안전인증표시의 사용을 인증합니다.

품 목

Cable gland

형식 · 모델 / 용량 · 등급 / 인증번호

형식·모델	용량 · 등급	인증번호
PX**	Ex d IIC, Ex e IIC, Ex nR IIC, Ex ta IIIC	14-GA4BO-0252X

인 증 기 준

방호장치 의무안전인증 고시(고용노동부고시 제2013-54호)

인 증 조 건

Tamb = -60℃ to +85℃

2014 년 06 월 13 일

한국가스안전공사 사장

인 증 조 건

1. 제조공장:

Glasshouse Street, St Peters, Newcastle upon Tyne, NE6 1BE, United Kingdom에 위치한 CMP Products Limited에서 생산한 제품 중 아래 인증범위에 한함.

2. 제품개요

The PX** series Type ranges of barrier cable glands consist of a male-threaded front entry component, fitted with a barrier tube such that a spigot/combination joint is formed, which is intended to screw into an entry point of its associated enclosure in accordance with relevant codes of practice. The barrier tube is filled with a sealing material that creates a flameproof seal around the cable cores passing through it and is mechanically retained. The fron entry component to main body mating thread may be fitted with an optional 'O'ring seal to provide increased ingress protection. Clamping of the armour or braid is effected by a combination of the front entry component and the different optional armour cone and reversible sleeve combinations within the main body being fastened together. An outer seal nut threads onto the main body and creates an environmental seal between the gland and cable outer sheath. The outer seal nut contains an elastomeric sealing ring and a Nylon 6 ferrule.

3. 인증범위:

품목 Cable gland,

모델 PX**(PX2KW, PX2KX, PX2K, PXRC, PXSS2K, PXSS2K-HC)에 한하여 인증함.

4. 안전한 사용을 위한 조건

가. The glands when used for terminating braide cables are only suitable for fixed installations. Cables must be effectively clamped to prevent pulling or twisting.

나. When the cable glands are supplied with an entry thread that is one size up from the nominal gland size, designated with the letter 'B' after the gland size, they shall not be used with any adptor device.

다. When assembled for fitting to flexible conduit, the conduit shall be effectively clamped to prevent twisting and pulling.

5. 인증(변경)사항

6. 그 밖의 사항

안전인증품의 품질관리, 변경사항 신고 등 인증 받은 자의 의무 준수.

Government of India
Ministry of Commerce & Industry
Petroleum & Explosives Safety Organisation (PESO)
5th Floor, A-Block, CGO Complex, Seminary Hills,
Nagpur - 440006

E-mail : explosives@explosives.gov.in
Phone/Fax No : 0712 -2510248, Fax-2510577

Approval No : A/P/HQ/KA/104/5698 (P444949) Dated : **18/06/2019**

To,

M/s. CMP Products Ltd,
Glasshouse Street, St Peters, Newcastle Upon Tyne, England, Tyne and Wear, NE6 1BS,Newcastle Upon Tyne
NE6 1BS
UK

Sub : Approval of Flame Proof, Increased Safety, under Petroleum Rules 2002- Regarding.

Sir(s),

Please refer to your letter No. **OIN302580** dated **16/05/2019** on the subject.

The following Ex electrical equipment(s) manufactured by you according to **EN 60079-0 : 2006, EN 60079-0 : 2012, EN 60079-0 : 2012/A11 : 2013, EN 60079-1 : 2004, EN 60079-1 : 2007, EN 60079-1 : 2014, EN 60079-31 : 2014, EN 60079-7 : 2007, EN 60079-7 : 2015,** standards and covered under **Intertek Testing & Certification Limited / Sira Certification Services** Test reports mentioned below is/are approved for use in **Zone 1,Zone 2** of Gas **IIC** hazardous areas coming under the the Petroleum Rules, 2002 administered by this Organization.

Sr. No	Description	Safety Protection	Equipment reference Number	Test Agency			Drawing no
				Name	Certificate No.	Certificate Date	
1	Cable Gland Types A**	Ex e IIC Gb / Ex d IIC Gb	**P444949/1**	Sira Certification Services	Sira 13 ATEX1068X Issue 2	17/12/2014	As Per Test Report
2	Type 737,747, 757,767 and 797 Range of Adaptors, Reducers and Stopping Plugs	Ex e IIC Gb / Ex d IIC Gb (metallic)	**P444949/2**	Sira Certification Services	SIRA 13ATEX1265X (issue 1)	17/09/2014	As Per Test Report
3	Type 784 , 789, PX784, PX789 Unions	Ex eb IIC Gb / Ex db IIC Gb	**P444949/3**	Intertek Testing & Certification Limited	ITS 17ATEX102499U	13/04/2018	As Per Test Report
4	Cable Gland Types Triton T3** and TE**	Ex e IIC Gb / Ex d IIC Gb	**P444949/4**	Sira Certification Services	SIRA 13ATEX1073X (issue 4)	04/02/2016	As Per Test Report
5	Cable Gland Types SS2K**	Ex e IIC Gb / Ex d IIC Gb	**P444949/5**	Sira Certification Services	SIRA 13ATEX1069X	29/04/2013	As Per Test Report
6	Cable Gland Types C**	Ex e IIC Gb	**P444949/6**	Sira Certification Services	SIRA 13ATEX1070X	29/04/2013	As Per Test Report
7	Cable Gland Types E**	Ex e IIC Gb / Ex d IIC Gb	**P444949/7**	Sira Certification Services	SIRA 13ATEX1071X	29/04/2013	As Per Test Report
8	Types PX** Cable Glands	Ex eb IIC Gb / Ex db IIC Gb	**P444949/8**	Intertek Testing & Certification Limited	ITS 17ATEX102491X	21/03/2018	As Per Test Report
9	Type 777 Range of Insulated Adaptors	Ex e IIC Gb / Ex d IIC Gb	**P444949/9**	Sira Certification Services	SIRA 10ATEX1057U	28/04/2010	As Per Test Report
10	PXFC and PXFC-LTPB Barrier Gland for Flexible Conduit	Ex e IIC Gb / Ex d IIC Gb	**P444949/10**	Sira Certification Services	SIRA 10ATEX1172X (issue 2)	17/02/2012	As Per Test Report
11	TMC2 Ranges of Cable Glands	Ex e IIC Gb	**P444949/11**	Sira Certification Services	SIRA 09ATEX1164X	24/08/2009	As Per Test Report
12	Type 780, PX780 Unions	Ex eb IIC Gb / Ex db IIC Gb	**P444949/12**	Intertek Testing & Certification Limited	ITS 17ATEX102498X	13/04/2018	As Per Test Report
13	Type 783 Series (Y) shaped and 793 series (T) shaped dual entry Adaptors	Ex eb IIC Gb / Ex db IIC Gb	**P444949/13**	Sira Certification Services	SIRA 16ATEX1234U (issue 1)	13/12/2016	As Per Test Report
14	TMCX and TMC Ranges of Cable Glands	Ex e IIC Gb (TMC) / Ex d IIC Gb (TMCX)	**P444949/14**	Sira Certification Services	SIRA 07ATEX1122X (issue 2)	04/12/2017	As Per Test Report
15	TMC2X Ranges of Cable Glands	Ex e IIC Gb / Ex d IIC Gb	**P444949/15**	Sira Certification Services	SIRA 09ATEX1165X (issue 1)	22/12/2014	As Per Test Report

16	Type TC and TCCG Ranges of Cable Glands	Ex e IIC Gb / Ex d IIC Gb	**P444949/16**	Sira Certification Services	SIRA 09ATEX1092X (issue 1)	14/12/2010	As Per Test Report
17	Type 781D Breather / Drain Plugs and Type 781E Breather/Drain Plugs	Ex e IIC Gb (781E) / Ex d IIC Gb (781D)	**P444949/17**	Sira Certification Services	SIRA 10ATEX1307U (issue 02)	19/09/2013	As Per Test Report
18	Type 787 Range of Right Angled Adaptors	Ex e IIC Gb / Ex d IIC Gb	**P444949/18**	Sira Certification Services	SIRA 14ATEX1033U	20/03/2014	As Per Test Report
19	Types A2F100, RA2F100, A2F100HC, RA2F100HC, A2F100/M, RA2F100/M, A2F100HC/M and RA2F100HC/M Series of Cable Gland	Ex eb IIC Gb / Ex db IIC Gb	**P444949/19**	Sira Certification Services	SIRA 16ATEX1018 (issue 1)	04/08/2017	As Per Test Report

This Approval is granted subject to observance of the following conditions:-

1)The design and construction of the equipment shall be strictly in accordance with description, condition and drawings as mentioned in the Intertek Testing & Certification Limited / Sira Certification Services Test Reports referred to above.

2)The equipment shall be used only with approved type of accessories and associated apparatus.

3)Each equipment shall be marked either by raised lettering cast integrally or by plate attached permanently to the main structure to indicate conspicuously:-
(a) Name of the manufacturer
(b) Name and number by which the equipment is identified.
(c) Number & date of the test report of the Intertek Testing & Certification Limited / Sira Certification Services applicable to the equipment.
(d) Equipment reference number of this letter by which use of apparatus is approved.
(e) Protection level.

4) A certificate to the effect that the equipment has been manufactured strictly in accordance with the drawing referred to in the Intertek Testing & Certification Limited / Sira Certification Services Test report and is identical with the one tested and certified at Intertek Testing & Certification Limited / Sira Certification Services shall be furnished with each equipment.
5) The customer shall be supplied with a copy of this letter, an extract of the conditions and maintenence schedule, if any, recommended by Intertek Testing & Certification Limited / Sira Certification Services in their test reports and copy of instructions booklet detailing operation & maintenance of the equipment so as to maintain its Flame Proof characterestics.
6) The After sales service and maintanance of subject equipment shall be looked after by your representative M/s. British Engines (India) Private Limited, 6A, Attibele Industrial Area, Bengaluru - 562 107 (Karnataka)

Conditions of the Approval:-
Ex e marked Ex electrical equipment shall be used in Zone 2 Area only.

This approval also covers the permissible variations as approved under the Intertek Testing & Certification Limited / Sira Certification Services test reports referred above. This approval is liable to be cancelled if any of the conditions of the approval is violated or not complied with . The approval may also be amended or withdrawn at any time, if considered necessary in the interest of safety.

The field performance report from actual users/your customers of the subject equipment may please be collected and furnished to this office for verification and record on annual basis.

The Approval is Valid upto **31/12/2021**

Yours faithfully,

(K Srinivasa Rao)
Controller of Explosives
For Chief Controller of Explosives
Nagpur

for Chief Controller of Explosives
Nagpur

Copy to :
1. Jt. Chief Controller of Explosives, South Circle Office, CHENNAI
2.M/s. British Engines (India) Private Limited,6A, Attibele Industrial Area, Bengaluru - 562 107 (Karnataka)

(For more information regarding status,fees and other details please visit our website http://peso.gov.in)

Note:- Please submit the revalidation application one month before the date of Expiry of approval otherwise approval will be treated as cancelled and a fresh application for approval will be considered for the approval.

防爆合格证

证 号：GYJ18.1252X

由 CMP Products Limited 制造的产品：

（地址： Glasshouse Street, St Peters, Newcastle-upon-Tyne, NE6 1BS, UK）

名　　称　电缆引入装置

型号规格　PX**系列

防爆标志　见本证书附件

产品标准　/

图样编号　/

经图样及技术文件的审查和样品检验，确认上述产品符合 GB 3836.1-2010、GB 3836.2-2010、GB 3836.3-2010、GB 3836.8-2014、GB 12476.1-2013、GB 12476.5-2013 标准，特颁发此证。

本证书有效期：2018 年 5 月 22 日至 2023 年 5 月 21 日

备注 1. 安全使用注意事项见本证书附件。
2. 证书编号后缀“X”表明产品具有安全使用特殊条件，内容见本证书附件。
3. 型号规格说明见本证书附件。

站长

国家级仪器仪表防爆安全监督检验站

颁发日期二〇一八年五月二十二日

本证书仅对与认可文件和样品一致的产品有效。

地址：上海市漕宝路103号　网址：www.nepsi.org.cn　电话：+86 21 64368180
邮编：200233　Email:info@nepsi.org.cn　传真：+86 21 64844580

国家级仪器仪表防爆安全监督检验站

National Supervision and Inspection Centre for Explosion Protection and Safety of Instrumentation

(GYJ18.1252X) **(Attachment Ⅰ)**

GYJ18.1252X防爆合格证附件Ⅰ

由CMP Products Limited生产的PX**系列电缆引入装置，经国家级仪器仪表防爆安全监督检验站(NEPSI)检验，符合下列防爆标准规定的要求：

GB 3836.1－2010 爆炸性环境 第1部分：设备 通用要求

GB 3836.2－2010 爆炸性环境 第2部分：由隔爆外壳“d”保护的设备

GB 3836.3－2010 爆炸性环境 第3部分：由增安型“e”保护的设备

GB 3836.8－2014 爆炸性环境 第8部分：由“n”型保护的设备

GB 12476.1－2013 可燃性粉尘环境用电气设备 第1部分：通用要求

GB 12476.5－2013 可燃性粉尘环境用电气设备 第5部分：外壳保护型“tD”

防爆标志为Ex d ⅡC Gb / Ex e ⅡC Gb / Ex nR ⅡC Gc / Ex tD A20 IP6X，防爆合格证号为GYJ18.1252X。

一、产品安全使用特殊条件

防爆合格证号后缀“X”，表明产品在使用时具有安全使用特殊条件，具体内容如下：

1. 电缆引入装置与电气设备外壳连接时，引入口的温度范围不得超过-60℃～＋85℃。

2. 当采用编织电缆时，电缆引入装置仅用在固定安装场所，并且须由用户采取有效措施夹紧电缆，以防电缆被拔脱或扭转。

3. 当引入口螺纹为B版本时，该产品严禁与转换接头配套使用。

二、产品规格

除表1和表2所列螺纹规格以外，还可选用满足ANSI/ASME B1.20.1-1983第8.1条外螺纹要求的NPT螺纹。

1. PX*-FF系列：

表1

型号规格	引入口螺纹	引入口螺纹(“B”版本)	电缆内部护套外径（mm）		电缆外部护套外径（mm）	
			最小值	最大值	最小值	最大值
20s	M20×1.5	M25×1.5	4.0×6.2	6.8×11.7	4.4×7.8	6.8×11.7
20	M20×1.5	M25×1.5	5.7×8.0	8.7×13.5	4.4×10.9	8.7×16.0

2. 其余PX**系列：

表2

型号规格	引入口螺纹	引入口螺纹（"B"版本）	最大芯数	最大芯线直径(mm)	SWA电缆		SWA、STA、带状铠装、挠性铠装①、金属丝编织电缆		电缆外部护套外径			
									PXSS2K②③		PX**③	
					最小值(mm)	最大值(mm)	最小值(mm)	最大值(mm)	最小值(mm)	最大值(mm)	最小值(mm)	最大值(mm)
20s/16	M20×1.5	M25×1.5	11	12.6	0.8	1.25	0	0.8	3.1	8.7	6.1	13.2
20s	M20×1.5	M25×1.5	11	12.6	0.8	1.25	0	0.8	6.1	11.7	9.5	15.9
20	M20×1.5	M25×1.5	11	12.6	0.8	1.25	0	0.8	6.5	14.0	12.5	20.9
20L	M20×1.5	M25×1.5	11	12.6	0.8	1.25	0	0.8	10.0	15.9	-	-
25s	M25×1.5	M32×1.5	21	17.5	1.25	1.6	0	1.1	11.1	20.0	14.0	22.0
25	M25×1.5	M32×1.5	21	17.5	1.25	1.6	0	1.1	11.1	20.0	18.2	26.2
32	M32×1.5	M40×1.5	38	23.6	1.6	2.0	0	1.2	17.0	26.3	23.7	33.9
32L	M32×1.5	M40×1.5	38	23.6	1.6	2.0	0	1.2	20.0	27.4	-	-
40	M40×1.5	M50×1.5	59	30.0	1.6	2.0	0	1.2	22.0	32.1	27.9	40.4
50s	M50×1.5	M63×1.5	89	36.6	2.0	2.5	0	1.5	29.5	38.2	35.2	46.7
50	M50×1.5	M63×1.5	89	41.0	2.0	2.5	0	1.5	35.6	44.1	40.4	53.1
63s	M63×1.5	M75×1.5	115	47.9	2.0	2.5	0	1.5	40.1	50.1	45.6	59.4
63	M63×1.5	M75×1.5	115	53.7	2.0	2.5	0	1.5	47.2	56.0	54.6	65.9
75s	M75×1.5	M90×2.0	140	59.9	2.0	2.5	0	1.5	52.8	62.0	59.0	72.1
75	M75×1.5	M90×2.0	140	64.3	2.5	3.0	0	1.5	59.1	68.0	66.7	78.5
90	M90×2.0	M100×2.0	200	75.3	3.0	3.5	0	1.6	66.6	79.4	76.2	90.4
100	M100×2.0	M115×2.0	200	85.6	3.15	4.0	0	1.6	76.0	90.9	86.1	101.5

注：①适用于**PX2KX，PX2K**型；

②可配用另一种外部螺帽,见图号为**GA273**的图纸；

③不包括**PXRC**。

3. 型号命名：

PX *a b c*

a：可选值：2KW，2KX，2K，B2KW，SS2K，SS2K-HC，RC，VAR

b：可选值：REX

b：可选值：PB，VAR，FF，HC，TA

三、产品使用注意事项

1. 用户不得自行更换该产品的零部件，应会同产品制造商共同解决使用中出现的故障，以杜绝损坏现象的发生。

2. 产品的安装、使用和维护应同时遵守产品说明书及下列相关标准、规范的要求：

GB 3836.13－2013 爆炸性环境 第13部分：设备的修理、检修、修复和改造

GB 3836.15－2000 爆炸性气体环境用电气设备 第15部分：危险场所电气安装（煤矿除外）

GB 3836.16－2006 爆炸性气体环境用电气设备 第16部分：电气装置的检查和维护（煤矿除外）

GB 50257－2014 电气装置安装工程爆炸和火灾危险环境 电气装置施工及验收规范

GB 12476.2－2010 可燃性粉尘环境用电气设备 第2部分：选型和安装

GB 15577－2007 粉尘防爆安全规程

四、制造厂责任

1．制造厂必须将上述安全使用特殊条件和使用注意事项纳入产品使用说明书。

2．制造厂必须严格按照NEPSI认可的文件资料生产。

国家级仪器仪表防爆安全监督检验站

二O一八年五月二十三日

Material Safety Data Sheet

To Whom It May Concern,

Larson Electronics LLC CGB industrial line of cable glands and cord grips for hazardous locations are considered "ARTICLES" under 29 CFR 1910-1200, the OSHA Hazard Communication Standard, and do not require a Material Safety Data Sheet (MSDS).

Articles are specifically exempt from the regulations of this standard. OSHA defines an article as follows:

1910-1200(c) – Article means a manufactured item other than a fluid or particle:

i. Which is formed to a specific shape or design during manufacture;
ii. Which has end use function(s) dependent in whole or in part upon its shape or design during end use; and
iii. Which under normal conditions does not release more than very small quantities.

The "hazardous location" and "explosion proof" are terminology for the environment where these products will be installed. This is not to be confused with "hazardous materials;" this product does not contain any hazardous materials.

Regards,

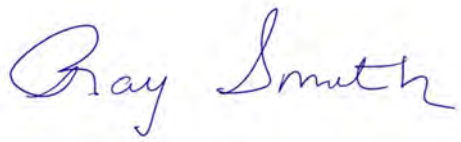

Ray Smith
Larson Electronics, LLC.

LARSON ELECTRONICS LLC • 9419 E US HWY 175 • KEMP, TX 75143
p: 1-800-369-6671 • intl: 903-498-3363 • f: 903-498-3364 • sales@larsonelectronics.com

CERTIFICATE OF COMPLIANCE

Certificate Number	20121003-E253914
Report Reference	E253914-20050328
Issue Date	2012-OCTOBER-03
Issued to:	CMP PRODUCTS GLASSHOUSE ST ST PETERS, NEWCASTLE-UPON-TYNE NE6 1BS UNITED KINGDOM
This is to certify that representative samples of	CONDUIT FITTINGS FOR USE IN ZONE CLASSIFIED HAZARDOUS LOCATIONS See Addendum Page
	Have been investigated by UL in accordance with the Standard(s) indicated on this Certificate.
Standard(s) for Safety:	UL 2225, Cables and Cable-Fittings for Use in Hazardous (Classified) Locations UL 514B, Conduit, Tubing and Cable Fittings UL 60079-0, Electrical Apparatus for Explosive Gas Atmospheres - Part 0: General Requirements UL 60079-7, Electrical Apparatus for Explosive Gas Atmospheres - Part 7: Increased Safety "e"
Additional Information:	See the UL Online Certifications Directory at www.ul.com/database for additional information

Only those products bearing the UL Listing Mark should be considered as being covered by UL's Listing and Follow-Up Service.

The UL Listing Mark generally includes the following elements: the symbol UL in a circle: (UL) with the word “LISTED”; a control number (may be alphanumeric) assigned by UL; and the product category name (product identifier) as indicated in the appropriate UL Directory.

Look for the UL Listing Mark on the product.

William R. Carney

William R. Carney, Director, North American Certification Programs

UL LLC

Any information and documentation involving UL Mark services are provided on behalf of UL LLC (UL) or any authorized licensee of UL. For questions, please contact a local UL Customer Service Representative at www.ul.com/contactus

CERTIFICATE OF COMPLIANCE

Certificate Number	20121003-E253914
Report Reference	E253914-20050328
Issue Date	2012-OCTOBER-03

This is to certify that representative samples of the product as specified on this certificate were tested according to the current UL requirements.

Series PXSS2K Cord fittings for use only with Listed Extra-hard usage cords. For vertical or horizontal mounting in Zone 1 hazardous locations. For use only with manufacturer's “Denso” Type 2122 sealing compound.

Class I, Zone 1, AEx d IIC and AEx e II hazardous locations when provided with NPT or a minimum 10 full ISO metric threads.

William R. Carney

William R. Carney, Director, North American Certification Programs

UL LLC

Any information and documentation involving UL Mark services are provided on behalf of UL LLC (UL) or any authorized licensee of UL. For questions, please contact a local UL Customer Service Representative at www.ul.com/contactus

CERTIFICATE OF COMPLIANCE

Certificate Number	20120925-E201187B
Report Reference	E201187-19990430
Issue Date	2012-SEPTEMBER-25

Issued to:

CMP PRODUCTS
GLASSHOUSE ST
ST PETERS, NEWCASTLE-UPON-TYNE
NE6 1BS UNITED KINGDOM

This is to certify that representative samples of

MARINE SHIPBOARD CABLE SEALING FITTINGS FOR USE IN HAZARDOUS LOCATIONS

MARINE SHIPBOARD CABLE FITTINGS FOR USE IN ZONE CLASSIFIED HAZARDOUS LOCATIONS

Marine Shipboard cable, Series PXSS2K

Have been investigated by UL in accordance with the Standard(s) indicated on this Certificate.

Standard(s) for Safety:

UL 2225, Standard for Cables and Cable Fittings for Use in Hazardous (Classified) Locations
CSA-C22.2 No. 174, Standard for Cables and Cable Glands for Use in Hazardous Locations

Additional Information:

See the UL Online Certifications Directory at www.ul.com/database for additional information

Only those products bearing the UL Listing Mark for the US and Canada should be considered as being covered by UL's Listing and Follow-Up Service meeting the appropriate requirements for US and Canada.
The UL Listing Mark for the US and Canada generally includes: the UL in a circle symbol with “C” and “US” identifiers: c UL us the word “LISTED”; a control number (may be alphanumeric) assigned by UL; and the product category name (product identifier) as indicated in the appropriate UL Directory.

Look for the UL Listing Mark on the product.

William R. Carney

William R. Carney, Director, North American Certification Programs

UL LLC

Any information and documentation involving UL Mark services are provided on behalf of UL LLC (UL) or any authorized licensee of UL. For questions, please contact a local UL Customer Service Representative at www.ul.com/contactus

Certificate of Compliance

Certificate: 2288626 (101909_0_000) **Master Contract:** 184585

Project: 70096183 **Date Issued:** 2016-10-06

Issued to: **CMP Products Ltd**
Glasshouse St.
St. Peters
Newcastle Upon Tyne, NE6 1BS
UNITED KINGDOM
Attention: Dave Willcock

The products listed below are eligible to bear the CSA Mark shown with adjacent indicators 'C' and 'US' for Canada and US or with adjacent indicator 'US' for US only or without either indicator for Canada only.

Issued by:
Madhumathi Kulothungan
Madhumathi Kulothungan

PRODUCTS

Class I, Division 2, Groups A, B, C and D; Class II, Division 2, Groups F and G; Class III, Division 1 and 2; Type 4X; Oil Resistance II:

Class I, Zone 2, AEx nR IIC Gc

- Series PX2K or PX2KW cable glands, integrally sealed (SL) for use only with served wire armored Tray Cable Type (TC). For vertical or horizontal mounting, for use with manufacturer's Type EP2122 or Rapid Ex sealing compound, trade sizes ½ in NPT through 4 in NPT and M20 through M100 (Metric), when provided with NPT or a minimum of 8 full ISO metric threads.

- Series PXSS2K cable glands, integrally sealed (SL) for use with unarmored Tray Cable Type (TC) and unarmored Marine Shipboard Cable Type. For vertical or horizontal mounting, for use with manufacturer's Type EP2122 or Rapid Ex sealing compound, trade sizes ½ in NPT through 4 in NPT and M20 through M100 (Metric), when provided with NPT or a minimum of 8 full ISO metric threads.

Class I, Division 2, Groups A, B, C and D; Class III, Division 1 and 2; Type 4X; Oil Resistance II:
Class I, Zone 2, AEx nR IIC Gc

- Series PX2K or PX2KW cable glands, integrally sealed (SL) for use only with served wire armored Tray Cable Type (TC-ER). For vertical or horizontal mounting, for use with manufacturer's Type EP2122 or

Rapid Ex sealing compound, trade sizes ½ in NPT through 4 in NPT and M20 through M100 (Metric), when provided with NPT or a minimum of 8 full ISO metric threads.

- Series PXSS2K cable glands, integrally sealed (SL) for use with unarmored Tray Cable Type (TC-ER) and unarmored Marine Shipboard Cable Type. For vertical or horizontal mounting, for use with manufacturer's Type EP2122 or Rapid Ex sealing compound, trade sizes ½ in NPT through 4 in NPT and M20 through M100 (Metric), when provided with NPT or a minimum of 8 full ISO metric threads.

Class I, Division 1 and 2, Groups A, B, C and D; Type 4X; Oil Resistance II:
Class I, Zone1, AEx d IIC Gb, AEx e IIC Gb; Class I, Zone 2, AEx nR IIC Gc

- Series PX2K or PX2KW cable glands, integrally sealed (SL) for use only with served wire armored Tray Cable Type (TC-ER-HL). For vertical or horizontal mounting, for use with manufacturer's Type EP2122 or Rapid Ex sealing compound, trade sizes ½ in NPT through 4 in NPT and M20 through M100 (Metric), when provided with NPT or a minimum of 8 full ISO metric threads.

- Series PXSS2K cable glands, integrally sealed (SL) for use with unarmored Tray Cable Type (TC-ER-HL). For vertical or horizontal mounting, for use with manufacturer's Type EP2122 or Rapid Ex sealing compound, trade sizes ½ in NPT through 4 in NPT and M20 through M100 (Metric), when provided with NPT or a minimum of 8 full ISO metric threads.

Class I, Division 2, Groups C and D; Class II, Division 2, Groups F and G; Class III, Division 1 and 2; Type 4X; Oil Resistant II:
Class I, Zone 2, AEx nR IIC Gc

- Series PX2K or PX2KW cable glands, integrally sealed (SL) for use only with served wire armored Tray Cable Type (TC). For vertical or horizontal mounting, for use with manufacturer's Type EP2122 or Rapid Ex sealing compound, trade sizes ½ in NPT through 4 in NPT and M20 through M100 (Metric), when provided with NPT or a minimum of 5 full ISO metric threads.

- Series PXSS2K cable glands, integrally sealed (SL) for use with unarmored Tray Cable Type (TC) and unarmored Marine Shipboard Cable Type. For vertical or horizontal mounting, for use with manufacturer's Type EP2122 or Rapid Ex sealing compound, trade sizes ½ in NPT through 4 in NPT and M20 through M100 (Metric), when provided with NPT or a minimum of 5 full ISO metric threads.

Class I, Division 2, Groups C and D; Class III, Division 1 and 2; Type 4X; Oil Resistant II:
Class I, Zone 2, AEx nR IIC Gc

- Series PX2K or PX2KW cable glands, integrally sealed (SL) for use only with served wire armored Tray Cable Type (TC-ER). For vertical or horizontal mounting, for use with manufacturer's Type EP2122 or Rapid Ex sealing compound, trade sizes ½ in NPT through 4 in NPT and M20 through M100 (Metric), when provided with NPT or a minimum of 5 full ISO metric threads.

- Series PXSS2K cable glands, integrally sealed (SL) for use with unarmored Tray Cable Type (TC-ER) and unarmored Marine Shipboard Cable Type. For vertical or horizontal mounting, for use with

manufacturer's Type EP2122 or Rapid Ex sealing compound, trade sizes ½ in NPT through 4 in NPT and M20 through M100 (Metric), when provided with NPT or a minimum of 5 full ISO metric threads.

Class I, Division 1 and 2, Groups C and D; Type 4X; Oil Resistant II:
Class I, Zone 1, AEx d IIC Gb, AEx e IIC Gb; Class I, Zone 2, AEx nR IIC Gc;

- Series PX2K or PX2KW cable glands, integrally sealed (SL) for use only with served wire armored Tray Cable Type (TC-ER-HL). For vertical or horizontal mounting, for use with manufacturer's Type EP2122 or Rapid Ex sealing compound, trade sizes ½ in NPT through 4 in NPT and M20 through M100 (Metric), when provided with NPT or a minimum of 5 full ISO metric threads.

- Series PXSS2K cable glands, integrally sealed (SL) for use with unarmored Tray Cable Type (TC-ER-HL). For vertical or horizontal mounting, for use with manufacturer's Type EP2122 or Rapid Ex sealing compound, trade sizes ½ in NPT through 4 in NPT and M20 through M100 (Metric), when provided with NPT or a minimum of 5 full ISO metric threads.

Class I, Division 1 and 2, Groups A, B, C and D; Class II, Division 1 and 2, Groups E, F and G; Class III; Type 4X: Oil Resistant II:
Class I, Zone 1, AEx d IIC Gb, AEx e IIC Gb; Class I, Zone 2 AEx nR IIC Gc; Class I, Zone 20 AEx ta IIIC Da

- Series PX2KX and PX2K cable glands, integrally sealed (SL) for use with braided-armored or armored-jacketed Marine Shipboard Cable Type. For vertical or horizontal mounting, for use with manufacturer's Type EP2122 or Rapid Ex sealing compound, trade sizes ½ in NPT through 4 in NPT and M20 through M100 (Metric), when provided with NPT or a minimum of 8 full ISO metric threads.

Class I, Division 1 and 2, Groups C and D; Class II, Division 1 and 2, Groups E, F and G; Class III; Type 4X: Oil Resistant II:
Class I, Zone 1, AEx d IIC Gb, AEx e IIC Gb; Class I, Zone 2 AEx nR IIC Gc; Class I, Zone 20 AEx ta IIIC Da

- Series PX2KX and PX2K cable glands, integrally sealed (SL) for use with braided-armored or armored-jacketed Marine Shipboard Cable Type. For vertical or horizontal mounting, for use with manufacturer's Type EP2122 or Rapid Ex sealing compound, trade sizes ½ in NPT through 4 in NPT and M20 through M100 (Metric), when provided with NPT or a minimum of 5 full ISO metric threads.

Class I, Division 1 and 2, Groups A, B, C and D; Class II, Groups E, F and G; Class III; Type 4X; Oil Resistant II:
Class I, Zone 1, AEx d IIC Gb, AEx e IIC Gb; Class I, Zone 2, AEx nR II C Gc; Class I, Zone 20 AEx ta IIIC Da

- Series PXSS2K cable glands, integrally sealed (SL) for use with Extra Hard usage cord. For vertical or horizontal mounting, for use with manufacturer's Type EP2122 or Rapid Ex sealing compound, trade sizes ½ in NPT through 4 in NPT and M20 through M100 (Metric), when provided with a minimum of 5 full NPT threads or 8 full ISO metric threads.

Class I, Division 1 and 2, Groups C and D; Class II, Division 1 and 2, Groups E, F and G; Class III; Type 4X: Oil Resistant II:
Class I, Zone 1, AEx d IIC Gb, AEx e IIC Gb; Class 1, Zone 2, AEx nR IIC Gc; Class I, Zone 20 AEx ta IIIC Da

- Series PX2KX cable glands, integrally sealed (SL) for use with braided-armored or armored-jacketed Marine Shipboard Cable Type. For vertical or horizontal mounting, for use with manufacturer's Type EP2122 or RapidEx sealing compound, trade sizes ½ in NPT through 4 in NPT and M20 through M100 (Metric), when provided with 5 full NPT threads or a minimum of 8 full ISO metric threads.

Notes:

1. Cable gland connectors material may be of brass, aluminum or stainless steel.
2. Connectors with metric entry threads are only suitable for Areas Classified in ZONES unless fitted with an approved Metric to NPT thread conversion adaptor**.**
3. According to US (NEC) wiring method for the types of cables that can be used in Class I, Div. 1 and 2 and Class I, Zone 1and 2 Classified Areas, according to 60079-14 installation wiring method restrictions.
4. When used with "RapidEx" sealing compound the product Series has suffix – REX added to it. E.g. PX2KW becomes PX2KW-REX.
5. "Tray Cable" in the report could be read as TC, TC-ER, TC-ER-HL (tray cable).
6. Cord in the report could be read as, SO, SOO, SOOW listed for 'extra hard usage'.
7. Marine Shipboard cables are for use only on Marine shipboard or off shore unless they have been tested to CSA Std. 174 and or UL Std. 2225 when used in Hazard Location Classified areas. These cables must be marked with the letter HL so that its known that they have being certified for Hazloc classified areas.
8. All cable types referenced can be read as being with or without an EMI shield.
9. Refer to the report 2288626, Edition 6 for Tables that specifically lists the cable gland with cable series applicable to respective divisions and zones as per CEC and NFPA 70 standards.

CLASS 4418 05 - CABLE - Hardware - For Hazardous Locations

Class I, Division 2, Groups A, B, C and D; Class II, Division 2, Groups F and G; Class III, Division 2; Type 4X; Oil Resistant II:
Ex nR IIC Gc

- Series PX2K or PX2KW cable glands, integrally sealed (SL) for use only with served wire armored Tray Cable Type. For vertical or horizontal mounting, for use with manufacturer's Type EP2122 or Rapid Ex sealing compound, trade sizes ½ in NPT through 4 in NPT and M20 through M100 (Metric), when provided with NPT or a minimum of 8 full ISO metric threads.

- Series PXSS2K glands, integrally sealed (SL) for use with unarmored Tray Cable Type and unarmored Marine Shipboard Cable Type. For vertical or horizontal mounting, for use with manufacturer's Type EP2122 or Rapid Ex sealing compound, trade sizes ½ in NPT through 4 in NPT and M20 through M100 (Metric), when provided with NPT or a minimum of 8 full ISO metric threads.

Class I, Division 2, Groups C and D; Class II, Division 2, Groups F and G; Class III, Division 2; Type 4X; Oil Resistant II:
Ex nR IIC Gc

- Series PX2K or PX2KW cable glands, integrally sealed (SL) for use only with served wire armored Tray Cable Type. For vertical or horizontal mounting, for use with manufacturer's Type EP2122 or Rapid Ex sealing compound, trade sizes ½ in NPT through 4 in NPT and M20 through M100 (Metric), when provided with NPT or a minimum of 5 full ISO metric threads.

- Series PXSS2K cable glands, integrally sealed (SL) for use with unarmored Tray Cable Type and unarmored Marine Shipboard Cable Type. For vertical or horizontal mounting, for use with manufacturer's Type EP2122 or Rapid Ex sealing compound, trade sizes ½ in NPT through 4in NPT and M20 through M100 (Metric), when provided with NPT or a minimum of 5 full ISO metric threads.

Class I, Division 1 and 2 Groups A, B, C and D; Class II, Division 1 and 2 Groups E, F and G; Class III, Division 1 and 2; Type 4X: Oil Resistant II:
Ex d IIC Gb, Ex e IIC Gb, Ex nR IIC Gc, Ex ta IIIC Da

- Series PX2KX and PX2K cable glands, integrally sealed (SL) for use with braided-armored or armored-jacketed Marine Shipboard Cable Type. For vertical or horizontal mounting, for use with manufacturer's Type EP2122 or RapidEx sealing compound, trade sizes ½ in NPT through 4 in NPT and M20 through M100 (Metric), when provided with NPT or a minimum of 8 full ISO metric threads

Class I, Division 1 and 2 Groups C and D; Class II, Division 1 and 2 Groups E, F and G; Class III, Division 1 and 2; Type 4X: Oil Resistant II:
Ex d IIC Gb, Ex e IIC Gb, Ex nR IIC Gc, Ex ta IIIC Da

- Series PX2KX and PX2K cable glands, integrally sealed (SL) for use with braided-armored or armored-jacketed Marine Shipboard Cable Type. For vertical or horizontal mounting, for use with manufacturer's Type EP2122 or RapidEx sealing compound, trade sizes ½ in NPT through 4 in NPT and M20 through M100 (Metric), when provided with NPT or a minimum of 5 full ISO metric threads

Class I, Division 1 and 2, Groups A, B, C and D; Class II, Groups E, F and G; Class III; Type 4X; Oil Resistant II:
Ex d IIC Gb; Ex e IIC Gb, Ex nR IIC Gc, Ex ta IIIC Da

- Series PXSS2K cable glands, integrally sealed (SL) for use with Extra Hard usage cord. For vertical or horizontal mounting, for use with manufacturer's Type EP2122 or Rapid Ex sealing compound, trade sizes ½ in NPT through 4 in NPT and M20 through M100 (Metric), when provided with a minimum of 5 full NPT threads or 8 full ISO metric threads

Class I, Division 1 and 2 Groups C and D; Class II, Division 1 and 2 Groups E, F and G; Class III, Division 1 and 2; Type 4X: Oil Resistant II:
Ex d IIC Gb, Ex nR IIC Gc, Ex e IIC Gb, Ex ta IIIC Da

- Series PX2KX cable glands, integrally sealed (SL) for use with braided-armored or armored-

jacketed Marine Shipboard Cable Type. For vertical or horizontal mounting, for use with manufacturer's Type EP2122 or RapidEx sealing compound, trade sizes ½ in NPT through 4 in NPT and M20 through M100 (Metric), when provided with 5 full NPT threads or a minimum of 8 full ISO metric threads.

Notes:

1. Cable gland connectors material may be of brass, aluminum or stainless steel.
2. Connectors with metric entry threads are only suitable for Areas Classified in ZONES unless fitted with an approved Metric to NPT thread conversion adaptor**.**
3. According to C.E.C. wiring method for the types of cables that can be used in Class I, Div. 1 and 2 and Class I, Zone 1and 2 Classified Areas, according to 60079-14 installation wiring method restrictions.
4. Shipboard Cables are for use on Marine Platform and or shipboards only and are subject to local authorities having jurisdiction on the installation.
5. When used with "RapidEx" sealing compound the product Series has suffix – REX added to it. E.g. PX2KW becomes PX2KW-REX.
6. "Tray Cable" in the report could be read as TC, TC-ER, TC-ER-HL (tray cable).
7. Marine Shipboard cables are for use only on Marine shipboard or off shore unless they have being tested to CSA Std. 174 and or UL Std. 2225 when used in Hazard Location Classified areas. These cables must be marked with the letter HL so that its known that they have being certified for Hazloc classified areas.
8. All cable types referenced can be read as being with or without an EMI shield
9. Refer to the report 2288626, Edition 6 for Tables that specifically lists the cable gland with cable series applicable to respective divisions and zones as per CEC and NFPA 70 standards.

Certificate: 2288626 **Master Contract:** 184585

Project: 70096183 **Date Issued:** 2016-10-06

APPLICABLE REQUIREMENTS

CAN/CSA-C22.2 No 0-M91	-	General Requirements
CAN/CSA-C22.2 No 18-04	-	Outlet Boxes, Conduit Boxes, and Fittings
CAN/CSA-C22.2 No 25-1966	-	Enclosures for Use in Class II, Groups E, F and G Hazardous Locations
CAN/CSA-C22.2 No 30-M1986-		Explosion Proof Enclosure for use in Class I Hazardous Locations – Industrial Products
CAN/CSA-C22.2 No.174-M1984	-	Cables and Cable Glands for Use in Hazardous Locations
CAN/CSA-C22.2 No.94-M91	-	Special Purpose Enclosures
CSA C22.2 No 60079-0-11	-	Explosive atmospheres — Part 0: Equipment — General requirements - Second Edition
CSA C22.2 NO 60079-7-12	-	Explosive atmospheres — Part 7: Equipment protection by increased safety “e” - First Edition
CSA C22.2 NO 60079-1-11	-	Explosive atmospheres — Part 1: Equipment protection by flameproof enclosures “d” - Second Edition
CSA C22.2 No 60079-15-12	-	Electrical apparatus for explosive gas atmospheres — Part 15: Construction, test and marking of type of protection "n" electrical apparatus - First Edition
CSA C22.2 No 60079-31-12	-	Explosive atmospheres -Part 31: Equipment dust ignition protection by enclosure “t”.
ANSI/UL 514B Edition 5	-	Conduit, Tubing, and Cable Fittings
ANSI/UL 50 Edition 11	-	Enclosures for Electrical Equipment
ANSI/UL 2225 Edition 4	-	Cables and Cable Fittings For Use in Hazardous (Classified) Locations
ANSI/ISA 60079-31 (12.10.03)-2013	-	Explosive atmospheres - Part 31: Equipment dust ignition protection by enclosure “t”.
CAN/CSA-E61241-1-1	-	Electrical Apparatus for for the presence of combustible dust – Part 1-1
UL60079-0:09	-	Electrical Apparatus for Explosive Gas Atmospheres – Part 0 -
UL60079-7:08	-	Electrical Apparatus for Explosive Gas Atmospheres – Part 7 – Increase Safety “e”
UL60079-1:09	-	Electrical Apparatus for Explosive Gas Atmospheres – Part 1 – Flameproof
UL60079-15:13	-	UL Standard for Safety Explosive atmospheres – Part 15: Equipment protection by type of protection "n" - Fourth Edition

CERTIFICATE OF COMPLIANCE

Certificate Number	20120925-E201187B
Report Reference	E201187-19990430
Issue Date	2012-SEPTEMBER-25

Issued to:

CMP PRODUCTS
GLASSHOUSE ST
ST PETERS, NEWCASTLE-UPON-TYNE
NE6 1BS UNITED KINGDOM

This is to certify that representative samples of

MARINE SHIPBOARD CABLE SEALING FITTINGS FOR USE IN HAZARDOUS LOCATIONS

MARINE SHIPBOARD CABLE FITTINGS FOR USE IN ZONE CLASSIFIED HAZARDOUS LOCATIONS

Marine Shipboard cable, Series PXSS2K

Have been investigated by UL in accordance with the Standard(s) indicated on this Certificate.

Standard(s) for Safety:

UL 2225, Standard for Cables and Cable Fittings for Use in Hazardous (Classified) Locations
CSA-C22.2 No. 174, Standard for Cables and Cable Glands for Use in Hazardous Locations

Additional Information:

See the UL Online Certifications Directory at www.ul.com/database for additional information

Only those products bearing the UL Listing Mark for the US and Canada should be considered as being covered by UL's Listing and Follow-Up Service meeting the appropriate requirements for US and Canada.
The UL Listing Mark for the US and Canada generally includes: the UL in a circle symbol with “C” and “US” identifiers: c UL us the word “LISTED”; a control number (may be alphanumeric) assigned by UL; and the product category name (product identifier) as indicated in the appropriate UL Directory.

Look for the UL Listing Mark on the product.

William R. Carney

William R. Carney, Director, North American Certification Programs

UL LLC

Any information and documentation involving UL Mark services are provided on behalf of UL LLC (UL) or any authorized licensee of UL. For questions, please contact a local UL Customer Service Representative at www.ul.com/contactus

Certification

Manufacturer: Larson Electronics LLC
Address: 9419 US-HWY 175
Kemp, Texas 75143

Declare the following equipment conforms to the standard(s) as listed:

Model: CGB-PXSS2K
Description: Explosion Proof Cable Gland

Evaluated Listings:

CE: DIRECTIVE 2014/35/EU - LOW VOLTAGE DIRECTIVE
CE: DIRECTIVE 2014/30/EU - EMC DIRECTIVE
CE: Regulation (EC) No 1907/2006 - REACH REGULATION
CE: DIRECTIVE 2015/863/EU - ROHS DIRECTIVE

The CGB-PXSS2K Series complies with the essential protection requirements of the European Parliament of the Council Directive for Low Voltage Directive, EMC Directive, REACH Regulation, and RoHS Directive. This certification applies to all specimens manufactured in accordance to the manufacture's drawings.

Signed for and on behalf of: Larson Electronics, LLC
Place of issue: Kemp, TX

Signature: James Thomas

Name: James Thomas
Position: Operations Manager

LARSON ELECTRONICS LLC • 9419 E US HWY 175 • KEMP, TX 75143
p: 1-800-369-6671 • intl: 903-498-3363 • f: 903-498-3364 • sales@larsonelectronics.com

Certification

Manufacturer: Larson Electronics LLC
Address: 9419 US-HWY 175
Kemp, Texas 75143

Declare the following equipment conforms to the standard(s) as listed:

Model: CGB-PXSS2K
Description: Explosion Proof Cable Gland

Evaluated Listings:

CE: DIRECTIVE 2015/863/EU - ROHS DIRECTIVE

This is to certify that products offered by Larson Electronics LLC comply with the Reduction of Hazardous Substances (RoHS) directives. Directive 2002/95/EC became effective on 1 July 2006. It restricts the use of six substances in the manufacture of electrical and electronic equipment. This directive was revised in June 2011 and is now referred to as directive 2011/65/EU. Directive 2015/863/EU amending Annex II to Directive 2011/65/EU announced plans to add four substances from 22 July 2019.

We hereby certify that the equipment specified above conforms to the Directive(s) by containing less of the restricted substances than the stated limits.

Signed for and on behalf of: Larson Electronics, LLC
Place of issue: Kemp, TX

Signature: 

Name: James Thomas
Position: Operations Manager

LARSON ELECTRONICS LLC • 9419 E US HWY 175 • KEMP, TX 75143
p: 1-800-369-6671 • intl: 903-498-3363 • f: 903-498-3364 • sales@larsonelectronics.com

Certification

Manufacturer: Larson Electronics LLC
Address: 9419 US-HWY 175
Kemp, Texas 75143

Declare the following equipment conforms to the standard(s) as listed:

Model: CGB-PXSS2K
Description: Explosion Proof Cable Gland

Evaluated Listings:

CE: Regulation (EC) No 1907/2006 - REACH REGULATION

This letter establishes the opinion of Larson Electronics LLC regarding the status, under the current European Union ("EU") Regulations on Registration, Evaluation, Authorization, and Restriction of Chemical Substances ("REACH").

REACH does not apply to manufactured products which are referred to as "completed articles". Substances (chemicals) are subject to REACH registration, NOT products.

In addition, Articles are exempt from the REACH requirements if (a) the Article does not contain a substance of very high concern or candidate substance in an amount exceeding 0.1% weight by weight, and (b) if substances present in the Article in excess of 1 ton per year per importer are not expected nor intended to be released.

Based on communication with our raw material suppliers, we conclude that to the best of our knowledge our products requiring REACH compliance do not contain any of the currently listed SVHC in concentrations of 0.1% or above.

Accordingly, we foresee no registration or pre-registration requirement for the products we supply.

Signed for and on behalf of: Larson Electronics, LLC
Place of issue: Kemp, TX

Signature: James Thomas

Name: James Thomas
Position: Operations Manager

LARSON ELECTRONICS LLC • 9419 E US HWY 175 • KEMP, TX 75143
p: 1-800-369-6671 • intl: 903-498-3363 • f: 903-498-3364 • sales@larsonelectronics.com

Larson Electronics LLC
9419 E US HWY 175, Kemp, TX 75143
Phone: 800.369.6671

www.LarsonElectronics.com
Email: sales@LarsonElectronics.com
Fax: 903.765.7664

Frequently Asked Questions (FAQ)

There are no Faqs