Larson Electronics LLC
9419 E US HWY 175, Kemp, TX 75143
Phone: 800.369.6671

www.LarsonElectronics.com
Email: sales@LarsonElectronics.com
Fax: 903.765.7664

LEDLB-24E-VISGREEN

LED Light Emitter - 12 Green LEDs, 12 White LEDs - 72 Watts - 800'L X 100'W Spot Beam - 9-42VDC

Product ID: 150499



Image: LEDLB-24E-VISGREEN

Larson Electronics LLC manufactures a wide variety of products, including custom built to spec designs. The pictures displayed for this unit are a general representation of form factor for the product line and may not accurately represent this exact configuration in every detail due to custom builds and changes between similar products in our standard catalog. The specifics for this configuration are listed in the specification table and supporting documentation (CAD files, Dimensional Drawing, Name Plate Diagram, Wiring Diagram, etc.). This means that specific details (receptacles, plugs, wires, connections, mounting brackets, external finishes, etc.) may not be accurately represented in images vs specifications. Please review specifications and do not order based solely on images.

LEDLB-24E-VISGREEN LED Light Bar

LEDs: 24 Edixeon® 3 Watt Emitters - (12) White & (12) Green
Dimensions: 8.25"-L 5.25"-H 3.56"-D
Watts: 72
Voltage: 9-42 VDC
Spot Beam: 800`L x 100`W
Flood Beam: 275`L x 240`W
Weight: 7.4 Lbs
Lighting Configuration: 10° Spot or 35° Flood
Mounting: Inverted U Bracket
Wiring: 26" 14/3 AWM Whip terminated in Deutsch IPD / LADD DT04-3P connector
Wiring Harness: 20` 16/3 SOOW Wiring Harnesses w/ Deutsch IPD / LADD DT06-3S plugs and blunt cut ends
Amps: 6 (on 12 volts) 3 (on 24 volts)
Lumens: 4,320
LED Light Color: White(6000K) + Green
LED Life Expectancy: 50,000 hours
Optics Efficiency: 90%
Materials: Aluminum Housing, Polycarbonate Lens
Housing Colors: Black or White

LEDLB LED Features

Edixeon® 3 Watt LED Emitters
LEDs Driven At 80%
-40 C~ +80C Operating Temp Range
RoHS Compliant
70% Lumen Retention @65,000 hours
LED Chip Op Temp -40C to +125C
IP68 Rated Waterproof to 3 Meters

CE Certified

Special Orders - Special Requirements

Contact us for special requirements
Toll Free: 1-800-369-6671
Intl: 1-903-270-1187
E-mail: sales@larsonelectronics.com

Buy American Compliant

The Larson Electronics LEDLB-24E-VISGREEN LED Light Bar offers high light output and extreme durability combined with versatile mounting and power options. This IP68 rated LED light bar is waterproof to three meters and produces a combination of white and green light while drawing only 72 watts of power @6 amps from a 12 volt electrical system. This light can run on any voltage from 9 to 32 volts and provides an extremely rugged lighting solution that is ideal for use in commercial marine environments as well as industrial and manufacturing applications such as machine vision system lighting, heavy equipment illumination, blasting lighting and mining operations.

The LEDLB-24E-VISGREEN LED light bar from Larson Electronics produces a combination light beam consisting of white and green light while drawing only 72 watts @6 amps from a 12 volt electrical system. Twenty-four Edison Edixeon® Emitters containing CREE EZBright® three watt LEDs are arranged in rows, two rows of white and two rows of green, and paired with high purity 10 degree optics to produce a tightly focused spot beam with limited spread or light spillage. We also offer optional floodlight versions with 35 degree optics to produce a wider beam spread and more light over a larger area nearer the fixture, making flood versions ideal for use as work and area lights.

This specially configured LED emitter is designed to produce visible white light and visible green light. The wiring harness includes separate power leads that enable the operator to power the white array (top two rows of LEDs) and the green array (bottom two rows of LEDs) separately. The white and green array share a single ground. This enables the operators to switch from visible white light to the green tracking light without leaving the vehicle via a 3-position switch.

These LED light bars are IP68 rated and waterproof to 3 meters, sealed against intrusion by dust and dirt and very ruggedly constructed to withstand the most demanding environments, conditions and applications. The entire Larson Electronics LEDLB-E series are constructed of extruded aluminum and feature heavier housings, rubber isolated mounts and unbreakable polycarbonate lenses to provide increased durability against vibrations, impacts, waves, hard rains, sand and high winds.

LED Benefits: Unlike gas burning and arc type lamps that have glass bulbs, LEDs have no filaments or fragile housings to break during operation and/or transportation. Instead of heating a small filament or using a combination of gases to produce light, light emitting diodes (LEDs) use semi-conductive materials that illuminate when electric current is applied, providing instant illumination with no warm up or cool down time before re-striking. Because there is no warm up period, this light can be cycled on and off with no reduction in lamp life.

LED lights run at significantly cooler temperatures than traditional metal halide and high pressure sodium lights and contain no harmful gases, vapors, or mercury, making them both safer and more energy efficient. No extra energy is wasted in cooling enclosed work areas due to external heat emissions from bulb type lights, and the operator risks associated with traditional lighting methods, such as accidental burns and exposure to hazardous substances contained in the glass bulbs, are eliminated. In addition, LEDs are also safer for the environment as they are 100% recyclable, which eliminates the need for costly special disposal services required with traditional gas burning and arc type lamps.

Heat Management: Heat is the single largest factor in premature LED failure and color shifting. As a result, many manufacturers reduce the output of their LEDs to reduce the amount of heat produced. These LED light bars utilize an extruded aluminum housing that incorporates an advanced heat radiating fin design which dissipates heat efficiently to produce the maximum amount of power and longevity from the integrated Edison Edixeon® Emitters. The end result is more light and longer LED life with higher average lumen maintenance after 50,000 hours.

Voltage Control: These units are able to monitor and adjust input current to maintain the correct LED voltage levels regardless of input levels across a specific range. These LEDLB series light bars can operate on current ranging from 9 to 32V DC without any modifications necessary as a result. This multi-voltage capability makes these units ideal for mobile and stand alone applications such as those found on commercial boats, heavy equipment and vehicles where power systems don`t always operate with 12 volts and external generators, transformers or inverters are impractical.

LEDLB-24E-VISGREEN
35° Flood Beam



LEDLB-24E-VISGREEN
10° Spot Beam

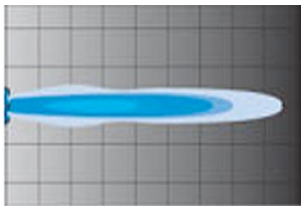

Durability: The LEDLB-E series of LED light bars from Larson Electronics offer IP68 rated construction that is designed to withstand extremes of environmental and operating conditions. The LED lights with the `E` part number designation are designed for extreme durability and are larger and heavier than the standard LEDLB series lights and are nearly twice as heavy as their standard counterparts. These units can withstand rapid temperature changes of -40 degrees Celsius to 85 degrees Celsius, are waterproof to three meters and resist ingress of dust, dirt and humidity. The housings are formed from thick extruded aluminum and the lenses are unbreakable polycarbonate. The Edixeon® LEDs offer inherent LED resistance to shocks and vibrations contributing to these units 15.6Grms rating of vibration tolerance. We recommend these LED lights for high stress - high vibratory conditions, high humidity climates, very cold areas and rough saltwater conditions. They are also well suited to environments where equipment is used in one temperature extreme and stored in another temperature extreme.

Mounting: Larson Electronics LEDLB series light bars are equipped standard with aluminum mounting blocks which slide within the aluminum housing to allow users to adjust their positioning to match existing or user drilled mounting holes. Each aluminum mounting block has an integrated rubber bushing to absorb vibrations and shocks. To secure the lights in place users simply slide the mounting bolts through the aluminum mounting block and rubber isolator, through the mounting surface, then secure the bolt with a locking nut on the opposite

side of the mounting surface. This mounting system enables mounting to flat or round surfaces and allows for minimal 7 degrees of flexibility of angle placement of the light. In this LED emitter light bar model, an additional mounting option is provided. The adjustable, shock insulated mounts are attached to a simple, inverted u-bracket type mount. The LED light bar can then be mounted via a single 3/8 bolt through the center of the bracket. We also offer a BC-2 bar clamp mounting system you can view here for even greater mounting versatility.

Note: This combination spotlight is terminated in a Deutsch IPD / LADD DT04-3P connector. The mating connector plug is DT06-3S. A 20` 16/3 SOOW wiring harnesses terminated in DT06-3S connectors and blunt cut ends are included with the light.

At Larson Electronics, we do more than meet your lighting needs. We also provide replacement, retrofit, and upgrade parts as well as industrial grade power accessories. Our craftsmen can custom build any lighting system and/or accessories to fit the unique demands of your operation. A commitment to honesty, quality, and dependability has made Larson Electronics a leader in the lighting and electronics business since 1973. Contact us today at 800-369-6671 or message sales@larsonelectronics.com for more information about our custom options tailored to meet your specific industry needs.

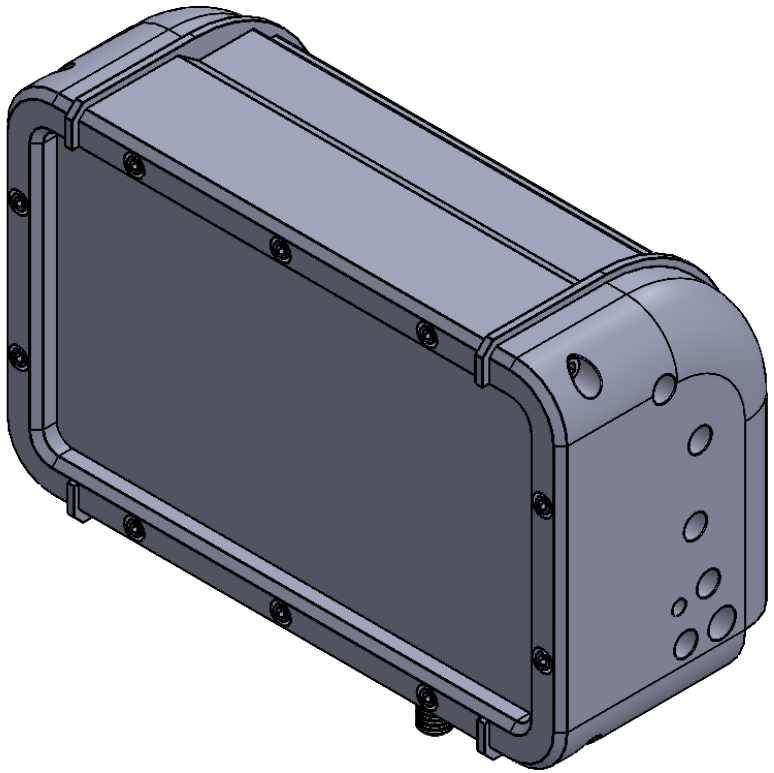

LARSON ELECTRONICS

PART NUMBER:

LEDLB-24E

SIZE		REV
A		1

SCALE: NTS | SHEET 1 OF 2

DIMENSIONS ARE IN INCHES

DO NOT SCALE DRAWING | DATE | 11/16/2021

UNLESS OTHERWISE NOTED:

Angle	+/- 1 deg
.X	+/- .1
.XX	+/- .05
.XXX	+/- .005

PROPRIETARY AND CONFIDENTIAL

THE INFORMATION CONTAINED IN THIS DRAWING IS THE SOLE PROPERTY OF LARSON ELECTRONICS LLC. ANY REPRODUCTION IN PART OR AS A WHOLE WITHOUT THE WRITTEN PERMISSION OF LARSON ELECTRONICS LLC IS PROHIBITED.

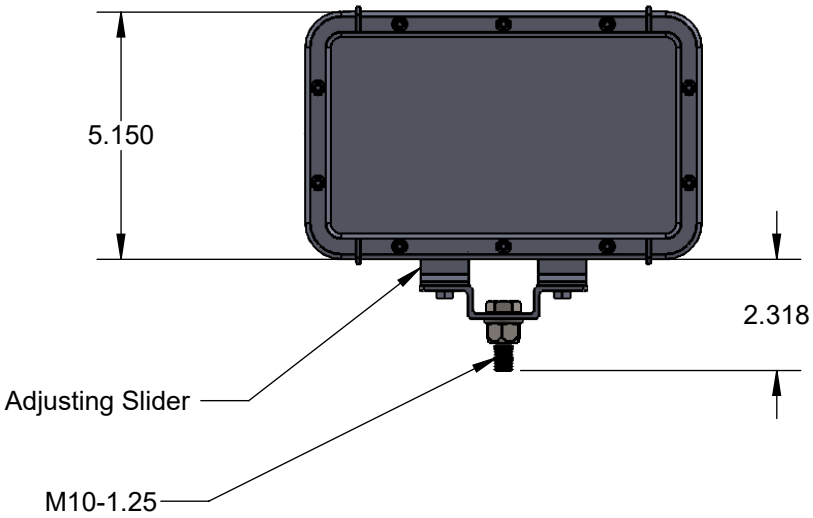

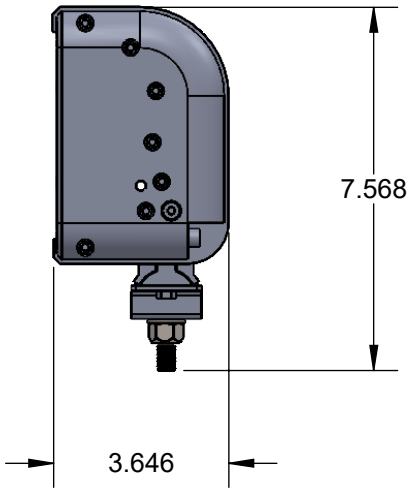

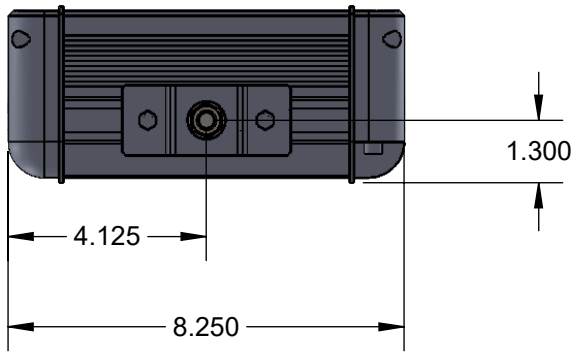

Mounting hole: M10 Clearance hole

PROPRIETARY AND CONFIDENTIAL
THE INFORMATION CONTAINED IN THIS DRAWING IS THE SOLE PROPERTY OF LARSON ELECTRONICS LLC. ANY REPRODUCTION IN PART OR AS A WHOLE WITHOUT THE WRITTEN PERMISSION OF LARSON ELECTRONICS LLC IS PROHIBITED.

UNLESS OTHERWISE NOTED:
Angle +/- 1 deg
.X +/- .1
.XX +/- .05
.XXX +/- .005

DIMENSIONS ARE IN INCHES
DO NOT SCALE DRAWING
DATE 11/16/2021

LARSON ELECTRONICS

PART NUMBER:

LEDLB-24E

SIZE **A**
REV 1
SCALE: NTS
SHEET 2 OF 2

Larson Electronics LLC
9419 E US HWY 175, Kemp, TX 75143
Phone: 800.369.6671

www.LarsonElectronics.com
Email: sales@LarsonElectronics.com
Fax: 903.765.7664



Larson Electronics LLC
9419 E US HWY 175, Kemp, TX 75143
Phone: 800.369.6671

www.LarsonElectronics.com
Email: sales@LarsonElectronics.com
Fax: 903.765.7664



Larson Electronics LLC
9419 E US HWY 175, Kemp, TX 75143
Phone: 800.369.6671

www.LarsonElectronics.com
Email: sales@LarsonElectronics.com
Fax: 903.765.7664



Larson Electronics LLC
9419 E US HWY 175, Kemp, TX 75143
Phone: 800.369.6671

www.LarsonElectronics.com
Email: sales@LarsonElectronics.com
Fax: 903.765.7664



Material Safety Data Sheet

To Whom It May Concern,

The Larson Electronics LLC LEDLB, LED3W, LED5W, LED10W, LEDP, and LEDxxWRE industrial line of LED light bars and light fixtures without emergency battery backup are considered "ARTICLES" under 29 CFR 1910-1200, the OSHA Hazard Communication Standard, and do not require a Material Safety Data Sheet (MSDS). This document does not expire.

Articles are specifically exempt from the regulations of this standard. OSHA defines an article as follows:

1910-1200(c) – Article means a manufactured item other than a fluid or particle:

i. Which is formed to a specific shape or design during manufacture;
ii. Which has end use function(s) dependent in whole or in part upon its shape or design during end use; and
iii. Which under normal conditions does not release more than very small quantities.

Regards,

Ray Smith
Larson Electronics, LLC.

LARSON ELECTRONICS LLC • 9419 E US HWY 175 • KEMP, TX 75143
p: 1-800-369-6671 • intl: 903-498-3363 • f: 903-498-3364 • sales@larsonelectronics.com

Certification

Manufacturer: Larson Electronics LLC
Address: 9419 US-HWY 175
Kemp, Texas 75143

Declare the following equipment conforms to the standard(s) as listed:

Model: LEDLB, LED3W, LED5W, LED10W, LEDP, and LEDxxWRE Series
Description: LED Light Bars

Evaluated Listings:

CE: DIRECTIVE 2014/35/EU - LOW VOLTAGE DIRECTIVE
CE: DIRECTIVE 2014/30/EU - EMC DIRECTIVE
CE: Regulation (EC) No 1907/2006 - REACH REGULATION
CE: DIRECTIVE 2015/863/EU - ROHS DIRECTIVE

The LEDLB, LED3W, LED5W, LED10W, LEDP, and LEDxxWRE series complies with the essential protection requirements of the European Parliament of the Council Directive for Low Voltage Directive, EMC Directive, REACH Regulation, and RoHS Directive. This certification applies to all specimens manufactured in accordance to the manufacture's drawings.

Signed for and on behalf of: Larson Electronics, LLC
Place of issue: Kemp, TX

Signature: James Thomas

Name: James Thomas
Position: Operations Manager

LARSON ELECTRONICS LLC • 9419 E US HWY 175 • KEMP, TX 75143
p: 1-800-369-6671 • intl: 903-498-3363 • f: 903-498-3364 • sales@larsonelectronics.com

Certification

Manufacturer: Larson Electronics LLC
Address: 9419 US-HWY 175
Kemp, Texas 75143

Declare the following equipment conforms to the standard(s) as listed:

Model: LEDLB, LED3W, LED5W, LED10W, LEDP, and LEDxxWRE
Description: LED Light Bars

Evaluated Listings:

CE: DIRECTIVE 2015/863/EU - ROHS DIRECTIVE

This is to certify that products offered by Larson Electronics LLC comply with the Reduction of Hazardous Substances (RoHS) directives. Directive 2002/95/EC became effective on 1 July 2006. It restricts the use of six substances in the manufacture of electrical and electronic equipment. This directive was revised in June 2011 and is now referred to as directive 2011/65/EU. Directive 2015/863/EU amending Annex II to Directive 2011/65/EU announced plans to add four substances from 22 July 2019.

We hereby certify that the equipment specified above conforms to the Directive(s) by containing less of the restricted substances than the stated limits.

Signed for and on behalf of: Larson Electronics, LLC
Place of issue: Kemp, TX

Signature: James Thomas

Name: James Thomas
Position: Operations Manager

LARSON ELECTRONICS LLC • 9419 E US HWY 175 • KEMP, TX 75143
p: 1-800-369-6671 • intl: 903-498-3363 • f: 903-498-3364 • sales@larsonelectronics.com

Certification

Manufacturer: Larson Electronics LLC
Address: 9419 US-HWY 175
Kemp, Texas 75143

Declare the following equipment conforms to the standard(s) as listed:

Model: LEDLB, LED3W, LED5W, LED10W, LEDP, and LEDxxWRE Series
Description: LED Light Bars

Evaluated Listings:

CE: Regulation (EC) No 1907/2006 - REACH REGULATION

This letter establishes the opinion of Larson Electronics LLC regarding the status, under the current European Union ("EU") Regulations on Registration, Evaluation, Authorization, and Restriction of Chemical Substances ("REACH").

REACH does not apply to manufactured products which are referred to as "completed articles". Substances (chemicals) are subject to REACH registration, NOT products.

In addition, Articles are exempt from the REACH requirements if (a) the Article does not contain a substance of very high concern or candidate substance in an amount exceeding 0.1% weight by weight, and (b) if substances present in the Article in excess of 1 ton per year per importer are not expected nor intended to be released.

Based on communication with our raw material suppliers, we conclude that to the best of our knowledge our products requiring REACH compliance do not contain any of the currently listed SVHC in concentrations of 0.1% or above.

Accordingly, we foresee no registration or pre-registration requirement for the products we supply.

Signed for and on behalf of: Larson Electronics, LLC
Place of issue: Kemp, TX

Signature: James Thomas

Name: James Thomas
Position: Operations Manager

LARSON ELECTRONICS LLC • 9419 E US HWY 175 • KEMP, TX 75143
p: 1-800-369-6671 • intl: 903-498-3363 • f: 903-498-3364 • sales@larsonelectronics.com

Larson Electronics LLC
9419 E US HWY 175, Kemp, TX 75143
Phone: 800.369.6671

www.LarsonElectronics.com
Email: sales@LarsonElectronics.com
Fax: 903.765.7664

Frequently Asked Questions (FAQ)

There are no Faqs