Larson Electronics LLC
9419 E US HWY 175, Kemp, TX 75143
Phone: 800.369.6671

www.LarsonElectronics.com
Email: sales@LarsonElectronics.com
Fax: 903.765.7664

EPL-HB-50LED-RT-JB2-XLV-C1D1-12.3-150-EPP

50W Explosion Proof Low Bay LED Light - 120-277VAC Stepped Down 12/24VDC

Product ID: 150002



Image: EPL-HB-50LED-RT-JB2-XLV-C1D1-12.3-150-EPP

Larson Electronics LLC manufactures a wide variety of products, including custom built to spec designs. The pictures displayed for this unit are a general representation of form factor for the product line and may not accurately represent this exact configuration in every detail due to custom builds and changes between similar products in our standard catalog. The specifics for this configuration are listed in the specification table and supporting documentation (CAD files, Dimensional Drawing, Name Plate Diagram, Wiring Diagram, etc.). This means that specific details (receptacles, plugs, wires, connections, mounting brackets, external finishes, etc.) may not be accurately represented in images vs specifications. Please review specifications and do not order based solely on images.

EPL-HB-50LED-RT-JB2-XLV-C1D1-12.3-150-EPP Explosion Proof LED Light Fixture w/ Adjustable Trunnion Mount

Lamp Type: LED
Dimensions: 7.04" L x 7.04" H x 5.72" D
Watts: 50W
Voltage:120-277V AC Stepped Down to 12V DC or 24V DC
Lumens:7,000
Luminous Efficacy: 140 Lm/W
LED Light Color: 3000K, 4500K & 5600K
LED Life Expectancy: 60,000 hours
Lighting Configuration: Flood
NEMA Type (Lighting): 6H x 6V (60° Optics); 6H x 6V (125° Optics); 6H x 7V (140° Optics)
IES Classification: Type I (60° Optics); Type VS (125° Optics); Type VS (140° Optics)
Longitudinal Classification: Very Short (60° Optics); Very Short (125° Optics); Short (140° Optics)
Cutoff Classification: Cutoff
CIE Type: Direct
BUG Rating: B3-U1-G0 (60° Optics); B3-U1-G0 (125° Optics); B3-U1-G1 (140° Optics)
Flood Beam Angle: 60º or 125º
Ambient Operating Temp Range: -50°C to +65°C
Wiring: 150` 12/3 SOOW Between Transformer & Light - 10` 16/3 SOOW Between Transformer & Plug ; junction box for wiring
Cord Cap Options: 15-Amp 5-15 (125V), 20-Amp 5-20 (125V), or 20-Amp 6-20

Ratings/Approvals

Listed for United States and Canada
Class I, Divisions 1 & 2, Groups C and D
Class II, Divisions 1 & 2, Groups E, F and G
Class III, Divisions 1 & 2
Certified to UL 844 Ed. 13
Certified to UL 1598
Certified to C22.2 No. 137 Rev 2009
Certified to C22.2 No. 250.0
Certified to C22.2 No. 30-M-1986 Rev 2012
T5 Temperature Rating
Paint Spray Booth Approved
IEC 60529 Tested
IP67 Rated Waterproof

Special Orders - Special Requirements

Contact us for special requirements

(250V)
Housing Material: Copper Free Cast Aluminum
Housing Color: Epoxy Powder Coated - Grey
Lens Material: Hardened Borosillicate Glass
Mounting: Adjustable Trunnion Mount

Toll Free: 1-800-369-6671
Intl: 1-903-270-1187
Fax: 1-903-765-7664
E-mail: sales@larsonelectronics.com

The EPL-HB-50LED-RT-JB2-XLV-C1D1-12.3-150-EPP from Larson Electronics is an Explosion Proof Low Bay LED Light Fixture that operates on 120-277V AC that is stepped down to 12V DC or 24V DC via an inline transformer and that produces 6250 lumens while drawing only 50 watts. The EPL-HB-50LED-RT-JB2-XLV-C1D1-12.3-150-EPP is Class I, Divisions 1 & 2, Groups C and D, Class II, Divisions 1 & 2, Groups E, F ,G and Class III Divisions 1 & 2 rated for hazardous areas and is listed for use worldwide including the United States and Canada. This explosion proof low bay LED light fixture also features a junction box on the back for wiring and an adjustable trunnion mount, allowing operators to tilt the light after mounting.

The EPL-HB-50LED-RT-JB2-XLV-C1D1-12.3-150-EPP produces 7,000 lumens of high-intensity LED light for illumination within hazardous areas and potentially explosive work environments, with 3000K, 4500K and 5600K color temperature options. This explosion proof LED light fixture operates on voltages ranging from 120-277V AC. This input voltage is then stepped down to either 12V DC or 24V DC to operate the light via an inline transformer. The transformer is encapsulated to make it weatherproof, but it is NOT explosion proof and must remain located outside of the hazardous area. With 150` of 12/3 SOOW cable between the light and the encapsulated transformer, there is plenty of room to move around the hazardous work area while keeping the transformer in a safe location. There is 10` of 16/3 SOOW between transformer and plug. The EPL-HB-50LED-RT-JB2-XLV-C1D1-12.3-150-EPP produces a flood pattern with a 60° or 125º beam.

This explosion proof LED fixture is supported by an adjustable trunnion mount. Operators may securely and quickly mount the light for hands-free lighting in hazardous locations and confined spaces. After mounting, operators can adjust the angle of the LED fixture by tilting the light head up and down to reach the desired position. This versatile mounting system is ideal for industrial work that requires gloves. When a gloved hand is supporting the light through the opening of the trunnion mount, operators may use the LED fixture as a handheld unit for robust control.

LED Benefits: Unlike gas burning and arc type lamps that have glass bulbs, LEDs have no filaments or fragile housings to break during operation and/or transportation. Instead of heating a small filament or using a combination of gases to produce light, light emitting diodes (LEDs) use semi-conductive materials that illuminate when electric current is applied, providing instant illumination with no warm up or cool down time before re-striking. Because there is no warm up period, this light can be cycled on and off with no reduction in lamp life.

LED lights run at significantly cooler temperatures than traditional metal halide and high pressure sodium lights and contain no harmful gases, vapors, or mercury, making them both safer and more energy efficient. No extra energy is wasted in cooling enclosed work areas due to external heat emissions from bulb type lights, and the operator risks associated with traditional lighting methods, such as accidental burns and exposure to hazardous substances contained in the glass bulbs, are eliminated. In addition, LEDs are also safer for the environment as they are 100% recyclable, which eliminates the need for costly special disposal services required with traditional gas burning and arc type lamps.

Heat Management: Heat is the single largest factor in premature LED failure and color shifting. These LED units contain advanced drivers which use pulse width modulation to control heat buildup rather than simple voltage regulators which are typically harsh on sensitive electronics and can contribute to early LED failure. These units automatically sense the temperature of each LED and adjust the energy frequency or "duty cycle" accordingly to maintain heat levels within acceptable ranges. This system in essence flashes current at an extremely fast on and off rate to each LED based upon the LED`s core temperature. This flash rate is too fast to detect with the human eye, but provides precise control of the current flowing to each LED and thus the heat it generates. This allows the LEDs to be driven at up to 100% capacity without overheating or visible loss of light output. The LEDs are always driven at the same voltage but the duty cycle, however, is changed to alter how long the LEDs are actually on or off. The end result is more light with less heat and longer LED life with an average 80% lumen maintenance after 60,000 hours.

Click Photos to Enlarge



5-15 Straight Blade Plug



5-20 Straight Blade Plug



6-20 Straight Blade Plug

Wiring/Plug: This portable explosion proof LED lighting system is equipped with 150 foot of 12/3 chemical and abrasion resistant SOOW cord that is fitted with an explosion proof cord cap for easy connection to explosion proof outlets. A junction box is located on the back of the unit for wiring. Plug options include C1D1 rated 5-15 15 amp straight blade plug for 110-125V outlets with ground, C1D1 rated 5-20 20 amp straight blade plug for 110-125V outlets with ground, and C1D1 rated 6-20 20 amp straight blade plug for 220-250V outlets with ground. These explosion proof plugs must be mated with the appropriate explosion proof outlet to retain the C1D1 rating. Please choose cord cap option below. Please choose pigtail option below for flying leads with no plug.
PLEASE NOTE: WHILE THE LIGHT ITSELF IS EXPLOSION PROOF, THE INCLUDED STEP DOWN TRANSFORMER IS NOT AND MUST REMAIN OUTSIDE THE HAZARDOUS AREA

Durability: The EPL-HB-50LED-RT-JB2-XLV-C1D1-12.3-150-EPP explosion proof LED light fixture is IP67 rated, dust-proof, and protected against high pressure jets and temporary submersion. The cast aluminum body and LED lamp give this light excellent durability and resistance to vibration and impacts. The housing is specially designed to dissipate heat which increases the efficiency and lifespan of the LEDs and electronics.

High Quality Features

1. Low power consumption.
2. Instant on/off operation.
3. Fixture constructed of extruded corrosion resistant copper

Superior LED Benefits

1. 60,000+ hour lifespan.
2. Can SAVE 50% or more on energy.
3. Qualifies retrofit projects for financial incentives, including

free aluminum alloy.
4. Superior color rendering compared to HPS, LPS, MH.
5. Retains 80% lumen output after 60,000 operating hours.
6. Powder coated aluminum fixture body.
7. 5" ergonomic handle included
8. Low profile - Light weight
9. 7,000 Lumen output from 50 watts

utility rebates, tax credits and energy loan programs.
4. Reduces energy use and prolongs life-spans of peripheral cooling units (A/C, refrigeration)
5. 100% recyclable.
6. No toxins-lead, mercury.
7. No UV light, infrared radiation or CO2 emissions.
8. Qualifies buildings for LED and other sustainable business certifications.
9. Bright, even light maintains consistent color over time.
10. Instant on/off - No flickering, delays or buzzing.
11. Very good color rendering.
12. Vibration/impact resistant.
13. Significantly cooler operation.
14. Less frequent outages, higher output improves workplace safety.

At Larson Electronics, we do more than meet your lighting needs. We also provide replacement, retrofit, and upgrade parts as well as industrial grade power accessories. Our craftsmen can custom build any lighting system and/or accessories to fit the unique demands of your operation. A commitment to honesty, quality, and dependability has made Larson Electronics a leader in the lighting and electronics business since 1973. Contact us today at 800-369-6671 or message sales@larsonelectronics.com for more information about our custom options tailored to meet your specific industry needs.

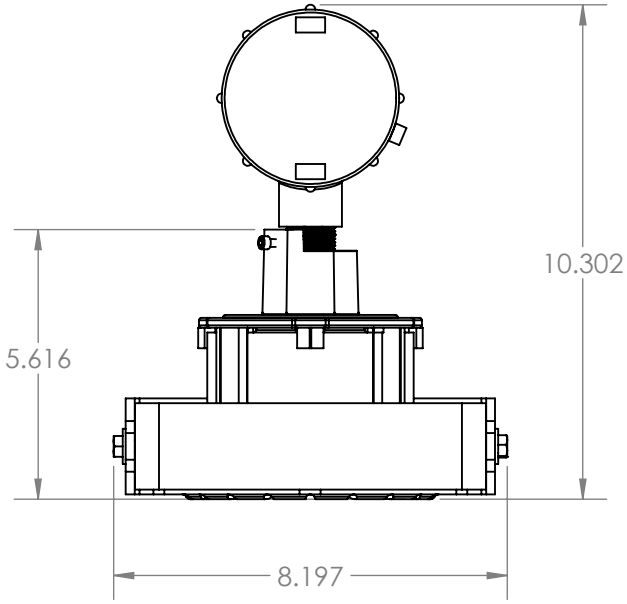

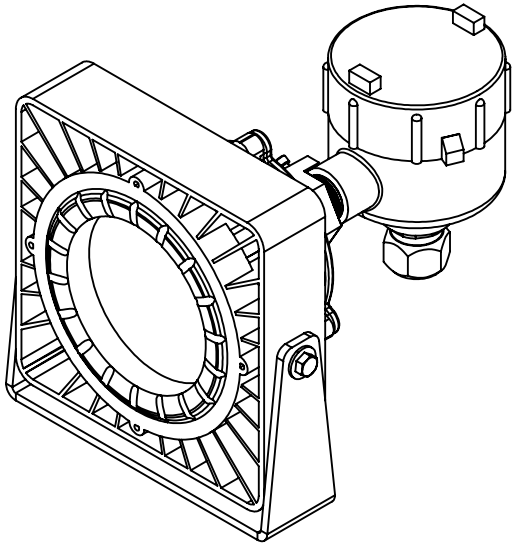

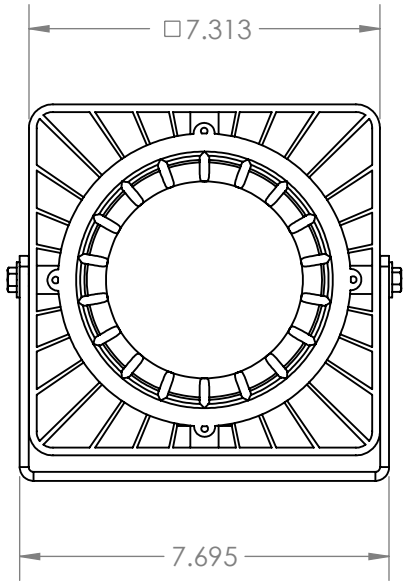

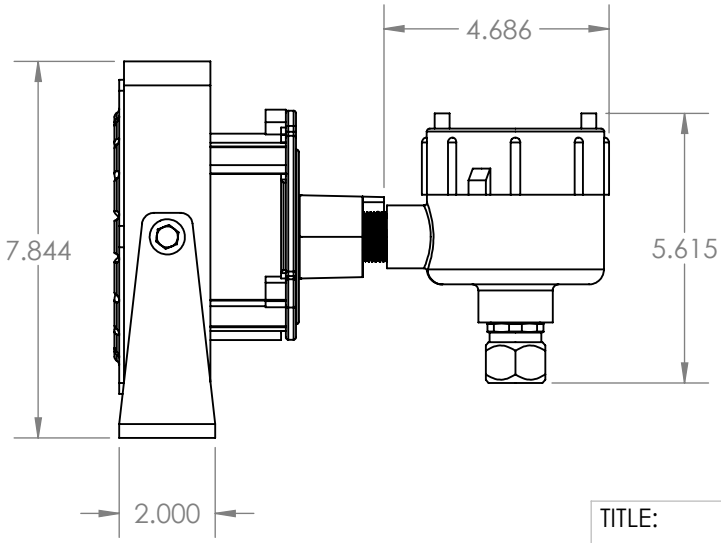

LARSON ELECTRONICS

TITLE:

EPL-HB-50LED-RT-JB2-XLV-C1D1-12.3-150-EPP

FINISH			
SURFACE AREA [sq. in]			NAME
DIMENSIONS ARE IN INCHES		DRAWN	CHRISTOPHER THAUER
MATERIAL		CHECKED	N/A
DO NOT SCALE DRAWING		DATE	9/25/2018

SIZE	DWG. NO.	REV
A		

SCALE: NTS | SHEET 1 OF 2

PROPRIETARY AND CONFIDENTIAL
THE INFORMATION CONTAINED IN THIS DRAWING IS THE SOLE PROPERTY OF LARSON ELECTRONICS LLC. ANY REPRODUCTION IN PART OR AS A WHOLE WITHOUT THE WRITTEN PERMISSION OF LARSON ELECTRONICS LLC IS PROHIBITED.

UNLESS OTHERWISE NOTED:

Angle	+/- .5 deg
.X	+/- .02
.XX	+/- .01
.XXX	+/- .005

5 4 3 2 1

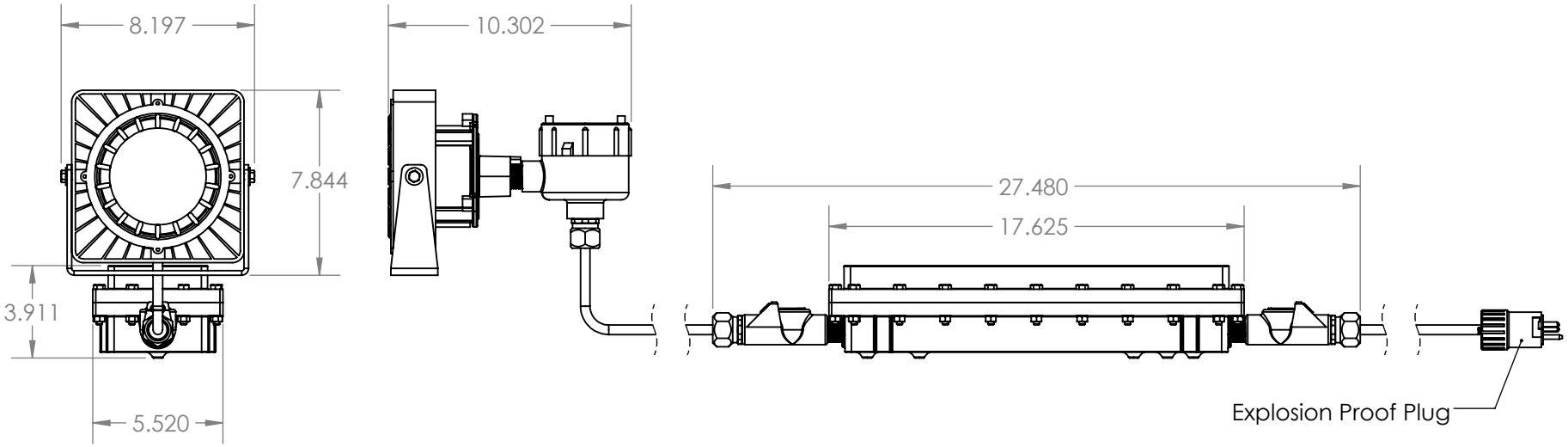

LARSON ELECTRONICS

TITLE:

EPL-HB-50LED-RT-JB2-XLV-C1D1-12.3-150-EPP

FINISH			
SURFACE AREA [sq. in]			NAME
DIMENSIONS ARE IN INCHES		DRAWN	CHRISTOPHER THAUER
MATERIAL		CHECKED	N/A
DO NOT SCALE DRAWING		DATE	9/25/2018

SIZE	DWG. NO.	REV
A		
SCALE: NTS		SHEET 2 OF 2

PROPRIETARY AND CONFIDENTIAL
THE INFORMATION CONTAINED IN THIS DRAWING IS THE SOLE PROPERTY OF LARSON ELECTRONICS LLC. ANY REPRODUCTION IN PART OR AS A WHOLE WITHOUT THE WRITTEN PERMISSION OF LARSON ELECTRONICS LLC IS PROHIBITED.

UNLESS OTHERWISE NOTED:

Angle	+/- .5 deg
.X	+/- .02
.XX	+/- .01
.XXX	+/- .005

5 4 3 2 1

Larson Electronics LLC
9419 E US HWY 175, Kemp, TX 75143
Phone: 800.369.6671

www.LarsonElectronics.com
Email: sales@LarsonElectronics.com
Fax: 903.765.7664



Larson Electronics LLC
9419 E US HWY 175, Kemp, TX 75143
Phone: 800.369.6671

www.LarsonElectronics.com
Email: sales@LarsonElectronics.com
Fax: 903.765.7664



Larson Electronics LLC
9419 E US HWY 175, Kemp, TX 75143
Phone: 800.369.6671

www.LarsonElectronics.com
Email: sales@LarsonElectronics.com
Fax: 903.765.7664



Larson Electronics LLC
9419 E US HWY 175, Kemp, TX 75143
Phone: 800.369.6671

www.LarsonElectronics.com
Email: sales@LarsonElectronics.com
Fax: 903.765.7664



Larson Electronics LLC
9419 E US HWY 175, Kemp, TX 75143
Phone: 800.369.6671

www.LarsonElectronics.com
Email: sales@LarsonElectronics.com
Fax: 903.765.7664

Frequently Asked Questions (FAQ)

There are no Faqs