Larson Electronics LLC
9419 E US HWY 175, Kemp, TX 75143
Phone: 800.369.6671

www.LarsonElectronics.com
Email: sales@LarsonElectronics.com
Fax: 903.765.7664

EPJ-CB-LB-1.5IN

Explosion Proof Elbow Conduit Body, Pulling Outlet Box, 1-1/2" Hubs, 90° Bend, Powder Coated Aluminum, C1D1 C2D1

Product ID: 149784



Image: EPJ-CB-LB-1.5IN

Larson Electronics LLC manufactures a wide variety of products, including custom built to spec designs. The pictures displayed for this unit are a general representation of form factor for the product line and may not accurately represent this exact configuration in every detail due to custom builds and changes between similar products in our standard catalog. The specifics for this configuration are listed in the specification table and supporting documentation (CAD files, Dimensional Drawing, Name Plate Diagram, Wiring Diagram, etc.). This means that specific details (receptacles, plugs, wires, connections, mounting brackets, external finishes, etc.) may not be accurately represented in images vs specifications. Please review specifications and do not order based solely on images.

EPJ-CB-LB-1.5IN Explosion Proof Elbow Conduit
Type: Explosion Proof Elbow Conduit
Dimensions: 7-3/4"L x 4-1/16"D x 3-15/16"W
Weight: 12 lbs
Volume: 27 Cubic Inches
Hub Size: 1.5"
Threading: Taper Threaded Hubs
Bushings: Integral
Covers: Easy Access
Bend Angle: 90°
Materials: Copper Free Aluminum
Finish: Electrostatically Applied Powder Coating
Finish Color: Grey

Ratings/Approvals
Class I, Divisions 1 & 2, Group D
Class II, Division 1, Groups E, F & G
Class II, Division 2, Groups F & G
Class III, Divisions 1 & 2
Allows Straight Pulls of Heavy Cable
Easy Access Covers
Integral Bushings

Special Orders - Special Requirements
Contact us for special requirements
Toll Free: 1-800-369-6671
Intl: 1-903-270-1187
Fax: 1-903-765-7664
E-mail: sales@larsonelectronics.com

The EPL-LB-1.5IN from Larson Electronics is an Explosion Proof Elbow Conduit that is designed to allow straight pulls of heavy cable. The EPL-LB-1.5IN features a 1.5" hub, integral bushings and easy access covers. This explosion proof elbow conduit is suitable for Class I Divisions 1 & 2 Group D, Class II Division 1 Groups E, F & G, Class II Division 2 Groups F & G and Class III Divisions 1 & 2 hazardous locations.

The EPL-LB-1.5IN explosion proof elbow conduit makes a 90 degree bend to permit conduit service entrance into buildings, provide conductor entrance to motors and provide access to wiring for maintenance and future system changes. The cover openings on this unit are on an angle which allows conductors to be pulled through the hub from either direction. The EPL-LB-1.5IN also features domed covers that allow easy bends and relieve strain on insulation as well as taper threaded hubs with integral bushings.

The EPL-LB-1.5IN is constructed from copper free aluminum and is finished with electrostatically applied powder coating for durability and corrosion resistance.

At Larson Electronics, we do more than meet your lighting needs. We also provide replacement, retrofit, and upgrade parts as well as industrial grade power accessories. Our craftsmen can custom build any lighting system and/or accessories to fit the unique demands of your operation. A commitment to honesty, quality, and dependability has made Larson Electronics a leader in the lighting and electronics business since 1973. Contact us today at 800-369-6671 or message sales@larsonelectronics.com for more information about our custom options tailored to meet your specific industry needs.

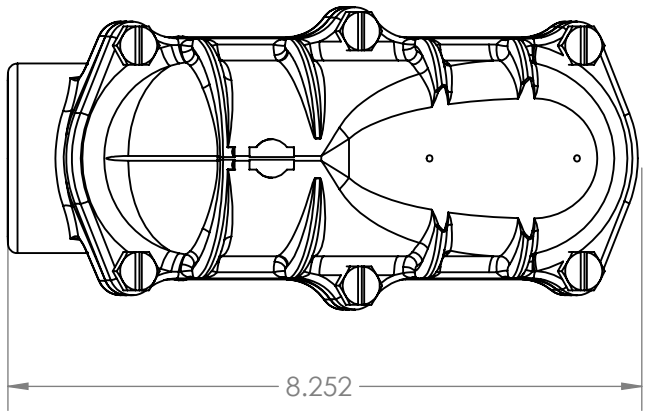

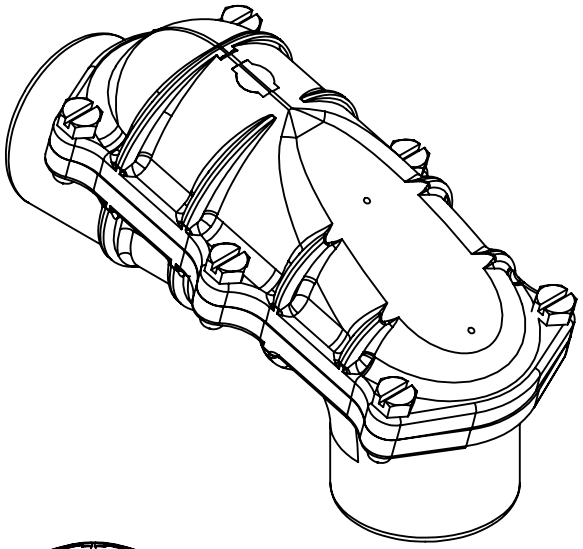

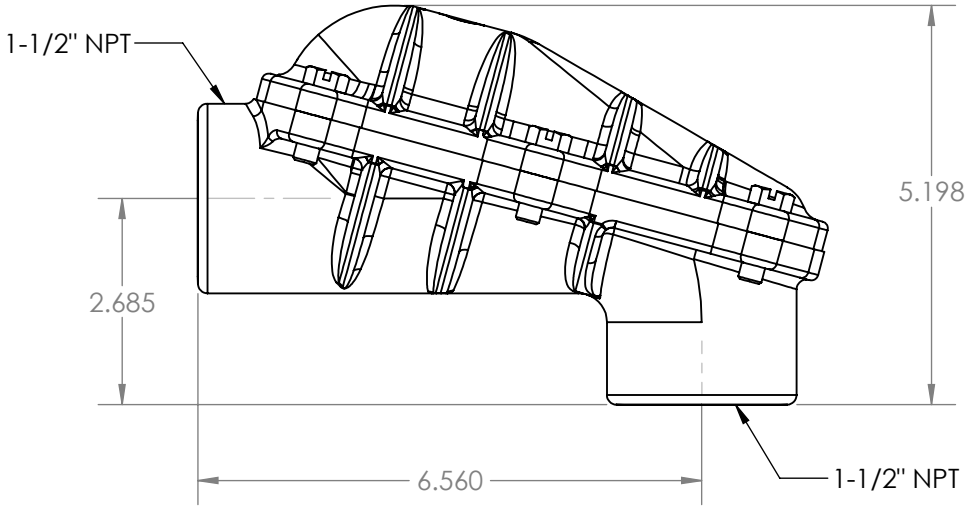

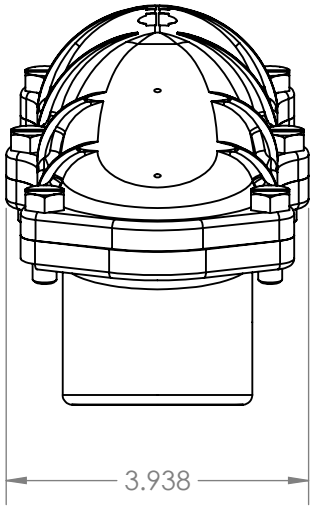

LARSON ELECTRONICS

TITLE:

EPJ-CB-LB-1.5IN

FINISH			
SURFACE AREA [sq. in]			NAME
DIMENSIONS ARE IN INCHES		DRAWN	CHRISTOPHER THAUER
MATERIAL		CHECKED	N/A
DO NOT SCALE DRAWING		DATE	1/31/2023

SIZE	DWG. NO.	REV
A		

SCALE: NTS | SHEET 1 OF 1

PROPRIETARY AND CONFIDENTIAL
THE INFORMATION CONTAINED IN THIS DRAWING IS THE SOLE PROPERTY OF LARSON ELECTRONICS LLC. ANY REPRODUCTION IN PART OR AS A WHOLE WITHOUT THE WRITTEN PERMISSION OF LARSON ELECTRONICS LLC IS PROHIBITED.

UNLESS OTHERWISE NOTED:

Angle	+/- .5 deg
.X	+/- .02
.XX	+/- .01
.XXX	+/- .005

Larson Electronics LLC
9419 E US HWY 175, Kemp, TX 75143
Phone: 800.369.6671

www.LarsonElectronics.com
Email: sales@LarsonElectronics.com
Fax: 903.765.7664

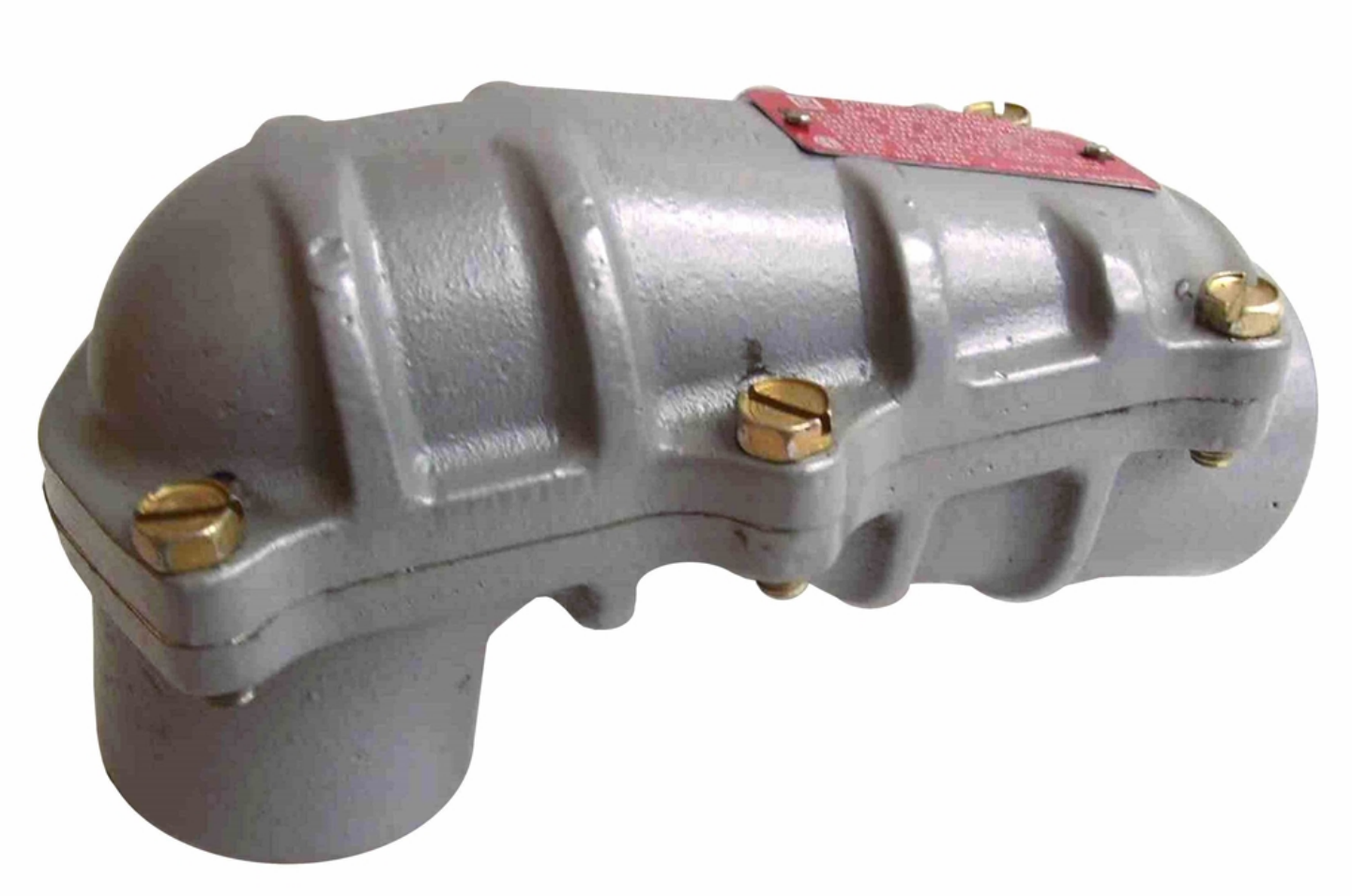

Material Safety Data Sheet

To Whom It May Concern,

The Larson Electronics LLC EPJ industrial line of junction boxes for hazardous locations are considered "ARTICLES" under 29 CFR 1910-1200, the OSHA Hazard Communication Standard, and do not require a Material Safety Data Sheet (MSDS). This document does not expire.

Articles are specifically exempt from the regulations of this standard. OSHA defines an article as follows:

1910-1200(c) – Article means a manufactured item other than a fluid or particle:

i. Which is formed to a specific shape or design during manufacture;
ii. Which has end use function(s) dependent in whole or in part upon its shape or design during end use; and
iii. Which under normal conditions does not release more than very small quantities.

Regards,

Ray Smith

Ray Smith
Larson Electronics, LLC.

LARSON ELECTRONICS LLC • 9419 E US HWY 175 • KEMP, TX 75143
p: 1-800-369-6671 • intl: 903-498-3363 • f: 903-498-3364 • sales@larsonelectronics.com

Larson Electronics LLC
9419 E US HWY 175, Kemp, TX 75143
Phone: 800.369.6671

www.LarsonElectronics.com
Email: sales@LarsonElectronics.com
Fax: 903.765.7664

Frequently Asked Questions (FAQ)

There are no Faqs