Larson Electronics LLC
9419 E US HWY 175, Kemp, TX 75143
Phone: 800.369.6671

www.LarsonElectronics.com
Email: sales@LarsonElectronics.com
Fax: 903.498.3364

EXHL-TRN-LE1-XLV-C1D1-150

12W Explosion Proof Handheld LED Light - 120-277VAC Stepped Down 12/24VDC - Trunnion Mount

Product ID: 149662



Larson Electronics LLC manufactures a wide variety of products, including custom built to spec designs. The pictures displayed for this unit are a general representation of form factor for the product line and may not accurately represent this exact configuration in every detail due to custom builds and changes between similar products in our standard catalog. The specifics for this configuration are listed in the specification table and supporting documentation (CAD files, Dimensional Drawing, Name Plate Diagram, Wiring Diagram, etc.). This means that specific details (receptacles, plugs, wires, connections, mounting brackets, external finishes, etc.) may not be accurately represented in images vs specifications. Please review specifications and do not order based solely on images.

EXHL-TRN-LE1-XLV-C1D1-150 Explosion Proof LED Light Fixture w/ Adjustable Trunnion Mount

Lamp Type: LED
Dimensions: 8"L x 6"W x 14"H
Watts: 12W
Voltage:120-277V AC Stepped Down to 12V DC or 24V DC
Lumens: 1,350
Luminous Efficacy: 110 Lm/W
LED Light Color: 6000K - White
LED Life Expectancy: 50,000 hours
Lighting Configuration: 10° Spot or 40° Flood
Spot Beam: 800`L x 140`W
Flood Beam: 300`L x 225`W
Ambient Operating Temp Range: -40°C to +60°C
Wiring: 150` 12/2 SOOW Between Transformer & Light - 10` 16/3 SOOW Between Transformer & Plug
Cord Cap Options: 15-Amp 5-15 (125V), 20-Amp 5-20 (125V), or 20-Amp 6-20 (250V)
Housing Material: Aluminum
Housing Color: Powder Coated - Grey
Lens Material: Borosilicate Glass
Mounting: Adjustable Trunnion Mount

Ratings/Approvals

Listed for United States, Canada, Europe, Asia
Class I, Div. 1 & 2, Groups B, C, D
Class I, Zones 1 & 2, Groups IIB+H2, IIA
Class II, Div. 1 & 2, Groups E, F ,G
Class III, Div. 1 & 2
NEMA Type 3, 4, 4X, 7 (B,C,D), 9 (E,F,G)
ATEX Ex II 2 G / D
IECEx db IIC Gb
IECEx tb IIC Db IP66

Special Orders- Requirements

Contact us for special requirements

Toll Free: 1-800-369-6671

Intl: 1-903-270-1187

E-mail: sales@larsonelectronics.com

REV	DESCRIPTION	DATE
A	PRODUCTION RELEASE- WITH IN LINE BASLLAST BOX	10/26/2023

EXHL-TRN-LE1-XLV-C1D1-150-1523-12VDC-FL

LARSON ELECTRONICS®

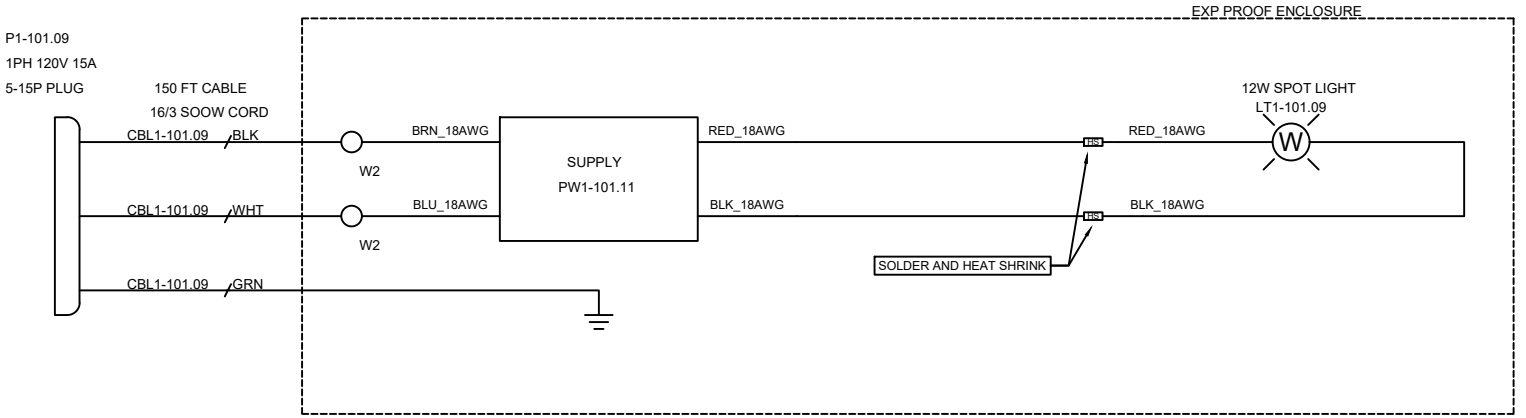

TAGS	QTY	CATALOG	DESCRIPTION
P1-101.09	1	UNV00005389	EXPLOSION PROOF 125V 15A PLUG
LT1-101.09	1	UNV00004101	25W 9-42V LED CANNON LIGHT
PW1-101.11	1	UNV00015867	90-264VAC-12V 60W LED DRIVER
W2	2	UNV00009802	2 HOLE WAGO
CBL1-101.09	1	UNV00007524	CORD 16/3 SOOW UL 90C BLK CABLE
CBL1-101.09A	1	UNV00016497	12/2 SOOW CABLE

LARSON ELECTRONICS
9419 E US HWY 175,
KEMP, TX 75143

TITLE: EXHL-TRN-LE1-XLV-C1D1-150-1523 -12VDC-FL

DRAWN BY	DATE	REV
S.Desai	10/26/2023	A
CHECKED BY	SHEET #	DRAWING #
J.Maldonado	1 OF 1	101

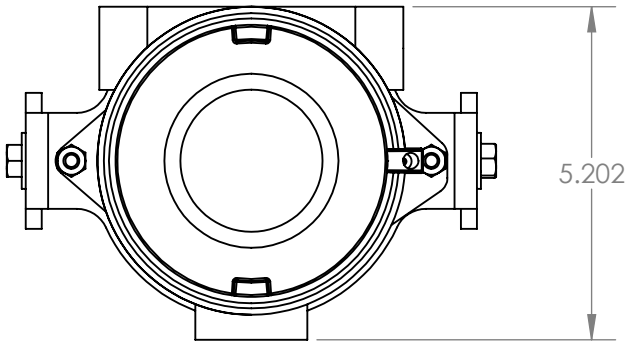

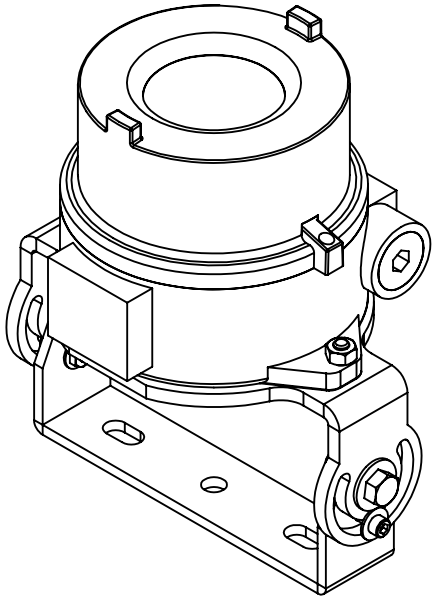

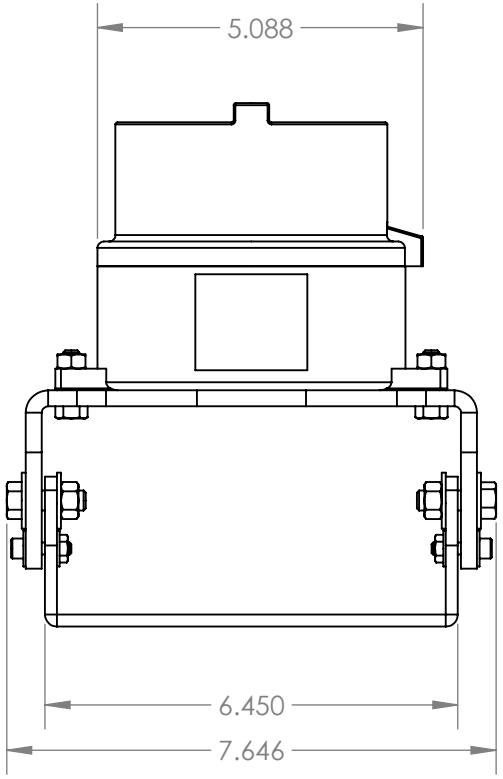

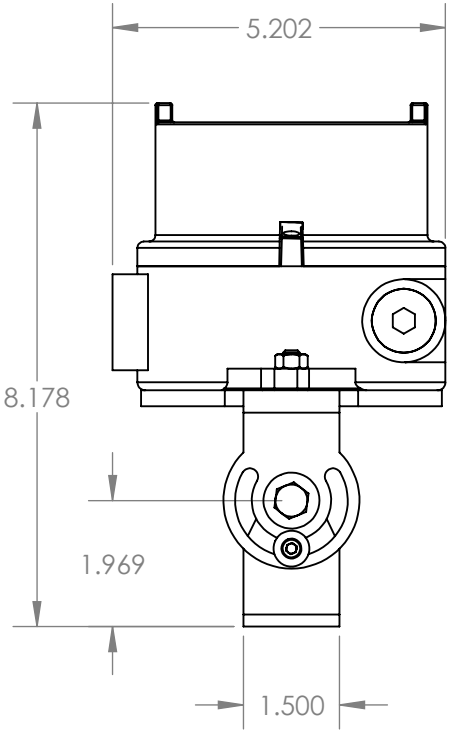

LARSON ELECTRONICS

TITLE:

EXHL-TRN-XX-1224

PROPRIETARY AND CONFIDENTIAL
THE INFORMATION CONTAINED IN THIS DRAWING IS THE SOLE PROPERTY OF LARSON ELECTRONICS LLC. ANY REPRODUCTION IN PART OR AS A WHOLE WITHOUT THE WRITTEN PERMISSION OF LARSON ELECTRONICS LLC IS PROHIBITED.

		NAME
DIMENSIONS ARE IN INCHES	DRAWN	CHRIS THAUER
MATERIAL	CHECKED	JEREMY BLANKENSHIP
DO NOT SCALE DRAWING		

SIZE	DWG. NO.	REV
A		

SCALE: 1:3 | SHEET 1 OF 2

5 4 3 2 1

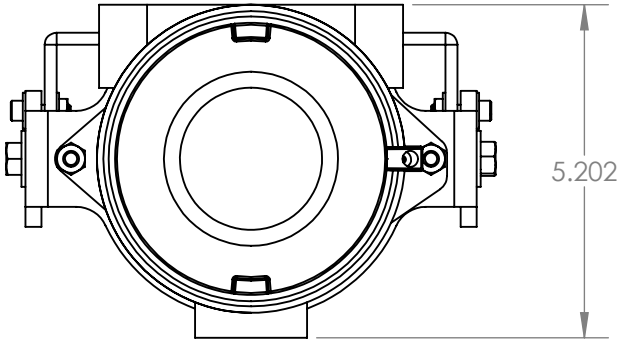

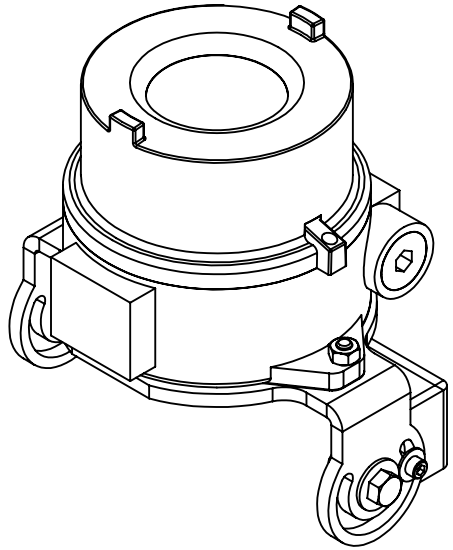

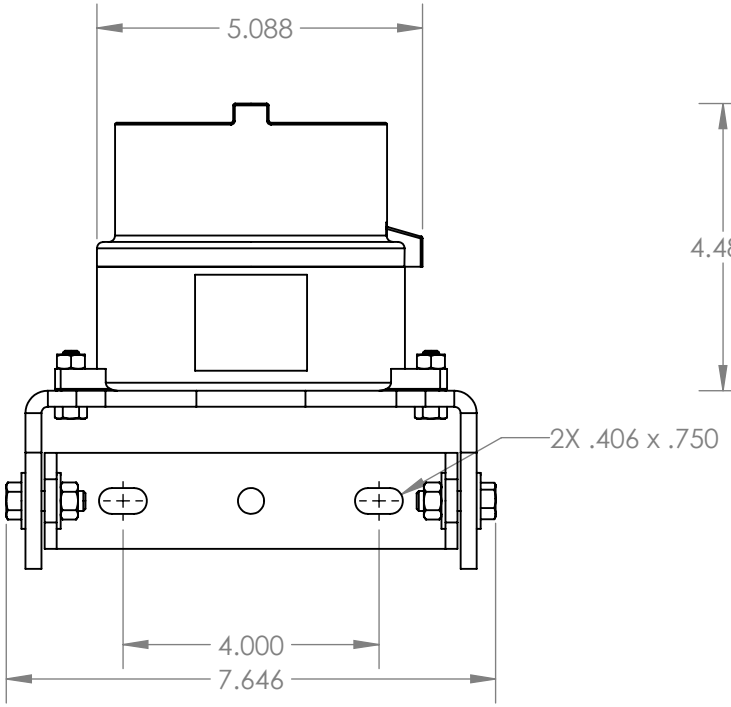

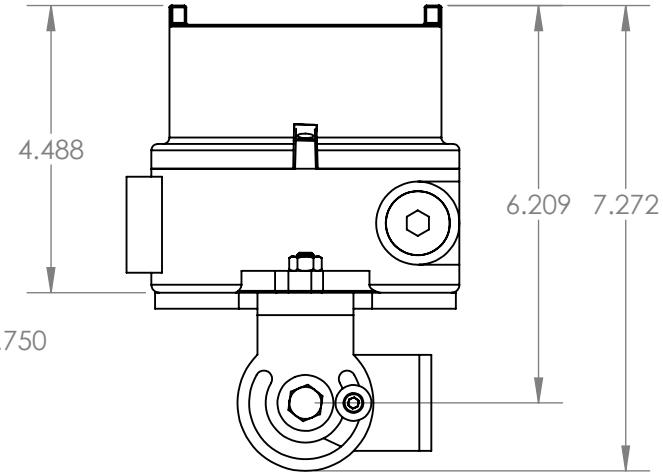

LARSON ELECTRONICS

TITLE:

EXHL-TRN-XX-1224

PROPRIETARY AND CONFIDENTIAL
THE INFORMATION CONTAINED IN THIS DRAWING IS THE SOLE PROPERTY OF LARSON ELECTRONICS LLC. ANY REPRODUCTION IN PART OR AS A WHOLE WITHOUT THE WRITTEN PERMISSION OF LARSON ELECTRONICS LLC IS PROHIBITED.

		NAME
DIMENSIONS ARE IN INCHES	DRAWN	CHRIS THAUER
MATERIAL	CHECKED	JEREMY BLANKENSHIP
DO NOT SCALE DRAWING		

SIZE	DWG. NO.	REV
A		

SCALE: 1:3 SHEET 2 OF 2

5 4 3 2 1

Certification

Manufacturer: Larson Electronics LLC
Address: 9419 US-HWY 175
Kemp, Texas 75143

Declare the following equipment conforms to the standard(s) as listed:

Model: EXHL-TRN-LE1
Description: Explosion Proof LED Light

Evaluated Listings:

UL: FTRV.E83969, BGYM.E83969, FTRX.E150827 – NEC / United States standards
UL: FTRV.E83969, BGYM7.E83969, FTRX7.E150827 – CEC / Canada standards
UL: DEMKO 06 ATEX 141023X, DEMKO 06 ATEX 0521635X **–** ATEX standards
UL: IEC Ex UL 14.0060X, IEC Ex UL 14.0069X – IEC Ex standards
CSA: LR11716 – CEC / Canada standards

The EXHL-TRN-LE1 is certified to NEC, CEC, ATEX, and IEC Ex standards for hazardous locations for:

- NEC: Class I, Divisions 1&2, Groups B, C, D; Class II, Divisions 1&2, Groups E, F, G
- NEC: Class I, Zones 1 & 2, Groups IIB + H2, IIA
- CEC: Class I, Divisions 1&2, Groups B, C, D; Class II, Divisions 1&2, Groups E, F, G
- CEC: Class I, Zones 1 & 2, Groups IIB + H2, IIA
- ATEX: Ex II 2 G D, -60°C ≤ Ta ≤ +70°C
- IEC EX: Ex db IIC “T4...T3” Gb, Ex e IIC “T4...T3” Gb, Ex tb IIIC “T110°C...T140°C” Db IP66, -60°C ≤ Ta ≤ +70°C

The EXHL-TRN-LE1-LV is comprised of a Killark HK series device enclosure. This device enclosure contains a LED assembly, LED driver, custom mounting of the equipment, wire connections, and an aluminum mounting bracket for the enclosure. This assembly is built to NEC, CEC, ATEX, and IEC standards for hazardous locations.

Signed for and on behalf of: Larson Electronics, LLC
Place of issue: Kemp, TX

Signature: James Thomas

Name: James Thomas
Position: Operations Manager

intertek
Total Quality. Assured.



<- Back

Product Description

Title:	INDUSTRIAL CONTROL PANELS
Company:	LARSON ELECTRONICS LLC - Kemp, TX USA
Product Information:	Industrial Control Panels For General Use.
Evaluated to the following:	A representative sample of the listed devices have been tested, investigated and found to comply with the requirements of the Standard(s) for Industrial Control Panels (UL-508A) and are identified with the ETL Listed Mark.

<- Back

Contact Us

ETL listed products that are in doubt or for products that do not appear in the directory, please request a verification of certification.
Americas+1-888-347-5478 (or +1-847-660-7407)
Email etldirectory@intertek.com

Intertek Home
Product Directories
DLP on mobile devices

Inspector Center

Get up-to-date information on everything from our Accreditations to our Certifications and Marks. Learn more...

News

Intertek Unveils New Design for Product Safety and Quality Certification Marks. Learn more...

© 2010 Intertek All Rights Reserved.
All other product or service names are the property of their respective owners.

intertek
Total Quality. Assured.



<- Back

Product Description

Title:	EXPLOSION-PROOF & DUST IGNITION-PROOF ELECTRICAL EQUIPMENT FOR USE IN HAZARDOUS (CLASSIFIED) LOCATIONS
Company:	LARSON ELECTRONICS LLC - Kemp, TX USA
Product Information:	Explosion-proof or dust-ignition-proof Industrial Control Panels for use in Hazardous (Classified) Locations, Model Nos. Custom Industrial Control Panels
Evaluated to the following:	A representative sample of the listed devices have been tested, investigated and found to comply with the requirements of the Standard(s) for Explosion-Proof and Dust Ignition-Proof Electrical Equipment for Use in Hazardous (Classified) Locations (UL-1203) and are identified with the ETL Listed Mark.

<- Back

Contact Us

ETL listed products that are in doubt or for products that do not appear in the directory, please request a verification of certification.
Americas+1-888-347-5478 (or +1-847-660-7407)
Email
etldirectory@intertek.com

Intertek Home
Product Directories
DLP on mobile devices

Inspector Center

Get up-to-date information on everything from our Accreditations to our Certifications and Marks. Learn more...

News

Intertek Unveils New Design for Product Safety and Quality Certification Marks. Learn more...

© 2010 Intertek All Rights Reserved.
All other product or service names are the property of their respective owners.

intertek
Total Quality. Assured.

<- Back

Product Description

Title:	INDUSTRIAL CONTROL EQUIPMENT
Company:	LARSON ELECTRONICS LLC - Kemp, TX USA
Product Information:	Industrial Control Panels For General Use. Industrial Control Panels Relating to Hazardous (Classified) Locations, Custom Industrial Control Panels. Power Distribution System, Model Nos. MGL, MPD, MGS series; Followed by AAK-PBB.FFF-SCC.GGG-EEXCCC.DDD; Where AA = 2,3,5,7,9,15,20,25,30,45,50,75; BB = 1P, 3P; FFF = 480,240,208,120; CC = 1P,3P; GGG = 480,240,208,120; EE = # of outlets; CCC = voltage; DDD = outlet amperage.
Evaluated to the following:	A representative sample of the listed devices have been tested, investigated and found to comply with the requirements of the Standard(s) for Industrial Control Equipment (CAN/CSA-C22.2 No. 14) and are identified with the cETL Listed Mark.

<- Back

Contact Us

ETL listed products that are in doubt or for products that do not appear in the directory, please request a verification of certification.
Americas+1-888-347-5478 (or +1-847-660-7407)
Email
etldirectory@intertek.com

Intertek Home
Product Directories
DLP on mobile devices

Inspector Center

Get up-to-date information on everything from our Accreditations to our Certifications and Marks. Learn more...

News

Intertek Unveils New Design for Product Safety and Quality Certification Marks. Learn more...

© 2010 Intertek All Rights Reserved.
All other product or service names are the property of their respective owners.

intertek
Total Quality. Assured.

<- Back

Product Description

Title:	ENCLOSURES
Company:	LARSON ELECTRONICS LLC - Kemp, TX USA
Product Information:	Explosion-proof or dust-ignition-proof Industrial Control Panels for use in Hazardous (Classified) Locations, Model Nos. Custom Industrial Control Panels Luminaires, Model Nos. EPL-48-2L-LED-SFC, EPL-24-2L-LED-SFC. for use in Hazardous Locations: Class I, Div. 1, Groups C and D T5 or T6 -20°C < Tamb < 40°C Class II, Div. 1., Groups E, F, and G; Class III Div.1 T3B -20°C < Tamb < 40°C
Evaluated to the following:	A representative sample of the listed devices have been tested, investigated and found to comply with the requirements of the Standard(s) for Enclosures for use in Class II, Groups E, F, G Hazardous Locations (CAN/CSA-C22.2 No. 25) and are identified with the cETL Listed Mark.

<- Back

Contact Us

ETL listed products that are in doubt or for products that do not appear in the directory, please request a verification of certification.
Americas+1-888-347-5478 (or +1-847-660-7407)
Email etldirectory@intertek.com

Intertek Home
Product Directories
DLP on mobile devices

Inspector Center

Get up-to-date information on everything from our Accreditations to our Certifications and Marks. Learn more...

News

Intertek Unveils New Design for Product Safety and Quality Certification Marks. Learn more...

© 2010 Intertek All Rights Reserved.
All other product or service names are the property of their respective owners.

intertek
Total Quality. Assured.



<- Back

Product Description

Title:	EXPLOSION-PROOF ENCLOSURES FOR USE IN CLASS I HAZARDOUS LOCATIONS
Company:	LARSON ELECTRONICS LLC - Kemp, TX USA
Product Information:	Explosion-proof or dust-ignition-proof Industrial Control Panels for use in Hazardous (Classified) Locations, Model Nos. Custom Industrial Control Panels
Evaluated to the following:	A representative sample of the listed devices have been tested, investigated and found to comply with the requirements of the Standard(s) for Explosion-Proof Enclosures for Use in Class I Hazardous Locations (CAN/CSA-C22.2 No. 30) and are identified with the cETL Listed Mark.

<- Back

Contact Us

ETL listed products that are in doubt or for products that do not appear in the directory, please request a verification of certification.
Americas+1-888-347-5478 (or +1-847-660-7407)
Email
etldirectory@intertek.com

Intertek Home
Product Directories
DLP on mobile devices

Inspector Center

Get up-to-date information on everything from our Accreditations to our Certifications and Marks. Learn more...

News

Intertek Unveils New Design for Product Safety and Quality Certification Marks. Learn more...

© 2010 Intertek All Rights Reserved.
All other product or service names are the property of their respective owners.

EU Declaration Of Conformity

Manufacturer :	Killark Electric , Div of Hubbell Inc.(Delaware), 2112 Fenton Logistics Park Blvd , Fenton, MO 63026, USA Tel : (314) 531-0460 | Email: killarkinfo@hubbell.com

Declares in its sole responsibility that the product mentioned below

Product Designation :	Increased Safety Enclosures with Terminal Blocks
Type Designation :	HK Series

is in conformity with the essential protection requirements of the following Directive(s),Certification Scheme(s) and Standard(s).

Directive(s) / Scheme(s)	Standard(s)
2014/34/EU ATEX Directive	EN 60079-0:2012+A11:2013 EN 60079-7:2015 EN 60079-31:2014
IEC Certification Scheme For Explosive Atmosphere	IEC 6007-0:2011, Ed. 6.0 IEC 60079-7:2015, Ed. 5.0 IEC 60079-31:2013, Ed. 2.0
Others	EN 60529:1991+A1:2000+A2:2013

Type Examination Certificate	
ATEX	IECEx
DEMKO 06 ATEX 0521635X Rev. 1	IECEx UL 14.0069X Issue No. 1

Certification Body	
ATEX	IECEx
UL International DEMKO A/S, Lyskaer 8, P.O. Box 514, DK-2730, Herlev, Denmark Reg No.: 0539	UL LLC, 333 Pfingsten Rd. Northbrook IL 60062-2096 United States Of America

Marking (Note 1)	
ATEX	IECEx
II 2G Ex eb IIC T4...T3 Gb II 2D Ex tb IIIC T110 ^{0}C ...T140 ^{0}C Db IP66 CE 2813 Ta = -60 ^{0}C to +70 ^{0}C	Ex eb IIC T4...T3 Gb Ex tb IIIC T110 ^{0}C ...T140 ^{0}C Db IP66 T_a = -60 ^{0}C to +70 ^{0}C

Note 1: Ratings provided are maximum ratings and may vary depend on the components used and their installation.Refer Certificate,Installation & Operating manual and rating plate on equipment for details.

QAN compliance has been approved by Notified Body CSA Group Netherlands B.V.,Utrechtseweg 310,6812 AR, Arnhem,Netherlands. (Notified Body number 2813).

To verify the status and authencity of IECEx Certificate of Conformity, please visit Official IECEx Website

Signature :

Name : Tom Michalski
Designation : Certifications Manager
Place and Date : Fenton, 25-10-2019

Material Safety Data Sheet

To Whom It May Concern,

The Larson Electronics LLC EXHL industrial line of LED lights without emergency backup for hazardous locations are considered "ARTICLES" under 29 CFR 1910-1200, the OSHA Hazard Communication Standard, and do not require a Material Safety Data Sheet (MSDS). This document does not expire.

Articles are specifically exempt from the regulations of this standard. OSHA defines an article as follows:

1910-1200(c) – Article means a manufactured item other than a fluid or particle:

i. Which is formed to a specific shape or design during manufacture;
ii. Which has end use function(s) dependent in whole or in part upon its shape or design during end use; and
iii. Which under normal conditions does not release more than very small quantities.

The "hazardous location" and "explosion proof" are terminology for the environment where these products will be installed. This is not to be confused with "hazardous materials;" this product does not contain any hazardous materials.

Regards,

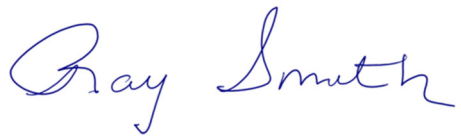

Ray Smith
Larson Electronics, LLC.

LARSON ELECTRONICS LLC • 9419 E US HWY 175 • KEMP, TX 75143
p: 1-800-369-6671 • intl: 903-498-3363 • f: 903-498-3364 • sales@larsonelectronics.com

CERTIFICATE OF COMPLIANCE

Certificate Number	E150827
Report Reference	E150827-19920928
Issue Date	2020-MARCH-19
Issued to:	KILLARK, DIV OF HUBBELL INC (DELAWARE) 2112 Fenton Logistics Park Blvd Fenton MO 63026
This certificate confirms that representative samples of	ENCLOSURE ACCESSORIES FOR USE IN HAZARDOUS LOCATIONS SEE ADDENDUM PAGE
	Have been investigated by UL in accordance with the Standard(s) indicated on this Certificate.
Standard(s) for Safety:	UL 1203, STANDARD FOR EXPLOSION-PROOF AND DUST-IGNITION-PROOF ELECTRICAL EQUIPMENT FOR USE IN HAZARDOUS (CLASSIFIED) LOCATIONS.
Additional Information:	See the UL Online Certifications Directory at https://iq.ulprospector.com for additional information.

This *Certificate of Compliance* does not provide authorization to apply the UL Mark. Only the UL Follow-Up Services Procedure provides authorization to apply the UL Mark.

Only those products bearing the UL Mark should be considered as being UL Certified and covered under UL's Follow-Up Services.

Look for the UL Certification Mark on the product.

Bruce Mahrenholz, Director North American Certification Program

UL LLC

Any information and documentation involving UL Mark services are provided on behalf of UL LLC (UL) or any authorized licensee of UL. For questions, please contact a local UL Customer Service Representative at http://ul.com/aboutul/locations/

CERTIFICATE OF COMPLIANCE

Certificate Number	E150827
Report Reference	E150827-19920928
Issue Date	2020-MARCH-19

This is to certify that representative samples of the product as specified on this certificate were tested according to the current UL requirements.

Enclosure accessories for use in Class I, Groups B, C, and D; Class II, Groups E, F, and G hazardous locations having the following designations.

Cat. No. HKB, HKBD, 2HKB, HKSB or 2HKSB enclosure body followed by -01, -02, -20, -21, -22, -01S, -02S, -21S, -22S, -2S1S, -2S2S, -2SO, -2S1, or -2S2; Cat. No. HFC, HK2D, HK4D, HKGL, HK2GLD, HFSC, HKS4D, HKSGL, or HKS2GLD enclosure covers.

Enclosure accessories for use in Class I, Groups A, B, C and D; Class II, Groups E, F and G hazardous locations having the following designations.

Cat. No. HKBX enclosure body followed by -10, -1S, -20, -2S, -M20, or -M25, followed by -SM, -2S, -M25, -MX; HKBX Series Cat. No. HFCX, HKXGL, HKX2D, and HKX2GLD enclosure covers.

Bruce Mahrenholz, Director North American Certification Program

UL LLC

Any information and documentation involving UL Mark services are provided on behalf of UL LLC (UL) or any authorized licensee of UL. For questions, please contact a local UL Customer Service Representative at http://ul.com/aboutul/locations/

CERTIFICATE OF COMPLIANCE

Certificate Number	E83969
Report Reference	E83969-19890322
Issue Date	2020-MARCH-19
Issued to:	KILLARK, DIV OF HUBBELL INC (DELAWARE) 2112 Fenton Logistics Park Blvd Fenton MO 63026
This certificate confirms that representative samples of	ENCLOSURES FOR USE IN HAZARDOUS LOCATIONS. ENCLOSURES FOR USE IN ZONE CLASSIFIED HAZARDOUS LOCATIONS. SEE ADDENDUM PAGE Have been investigated by UL in accordance with the Standard(s) indicated on this Certificate.
Standard(s) for Safety:	UL 1203, STANDARD FOR EXPLOSION-PROOF AND DUST-IGNITION-PROOF ELECTRICAL EQUIPMENT FOR USE IN HAZARDOUS (CLASSIFIED) LOCATIONS.
Additional Information:	See the UL Online Certifications Directory at https://iq.ulprospector.com for additional information.

This *Certificate of Compliance* does not provide authorization to apply the UL Mark. Only the UL Follow-Up Services Procedure provides authorization to apply the UL Mark.

Only those products bearing the UL Mark should be considered as being UL Certified and covered under UL's Follow-Up Services.

Look for the UL Certification Mark on the product.

Bruce Mahrenholz, Director North American Certification Program

UL LLC

Any information and documentation involving UL Mark services are provided on behalf of UL LLC (UL) or any authorized licensee of UL. For questions, please contact a local UL Customer Service Representative at http://ul.com/aboutul/locations/

CERTIFICATE OF COMPLIANCE

Certificate Number	E83969
Report Reference	E83969-19890322
Issue Date	2020-MARCH-19

This is to certify that representative samples of the product as specified on this certificate were tested according to the current UL requirements.

Cat. No. HKB, HKBD, or HKSB (HKB and HKSB may be prefixed by 2) followed by B, GL, 1GLD, 1D, 2GLD, 2D, 4GLD or 4D may be followed by C, may be followed by B, GL, 1GLD, 1D, 2GLD, 2D, 4GLD or 4D, may be followed by C, -10, -1S, -20, and -2S, may be followed by –MOD for Class I, Groups B, C, and D; Class II, Groups E, F, and G; Class III ; Class I, Zone 1, AEx db IIC Hazardous Locations.

Cat. No. HKBX, may be followed by B, GL, 2D or 2GLD, may be followed by 10, 1S, 20, 2S, M20, or M25, may be followed by SM, 2S, M25, or MX for use in Class I, Groups A, B, C and D; Class II, Groups E, F, and G; Class III Hazardous Locations.

Service Temperature: -60°C to +70°C.

Type 3, 4 and 4X Rated.

Bruce Mahrenholz, Director North American Certification Program

UL LLC

Any information and documentation involving UL Mark services are provided on behalf of UL LLC (UL) or any authorized licensee of UL. For questions, please contact a local UL Customer Service Representative at http://ul.com/aboutul/locations/

Certification Record

Contact an Expert (https://www.csagroup.org/contact/)

Inc. (Delaware) 2112 Fenton Logistics Park Blvd, Fenton Missouri United States 63026	OUTLET BOXES AND FITTINGS-Boxes - For Hazardous Locations	

Contact an Expert (https://www.csagroup.org/contact/)

Class I, Groups B, C, and D; Class II, Groups E, F and G; Class III, Types 3, 4 and 4X CSA (complete enclosures and component packaged).

- HK and 2HK Series instrument enclosure (Component Packaged): HKB, HKSB, HKBD, 2HKB, or 2HKSB box with optional covers: HFC, HFSC, HKGL, HKSGL, HK1D, HKS2D, HK4D, HKS4D, HK1GLD, HK2GLD, HKS2GLD or HK4GLD denoting flat (F), dome (D), and window covers (GL); with 3/4 in. conduit entries.
- HK and 2HK Series instrument enclosures, Cat No: HKB, HKSB, HKBD, 2HKB, or 2HKSB; may be followed with the suffix 01, 02, 20, 21, 22, 01S, 02S, 21S, 22S, 2S1S, 2S2S, 2SO, 2S1, or 2S2.
- HK Series instrument enclosures, Cat No: HKB, HKSB, or HKBD followed by Suffix B, 1D, 2D, 4D, GL, 1GLD, 2GLD or 4GLD; may be followed with the suffix letter C; with 3/4 in. max conduit entries.
- 2HK Series instrument enclosures Cat No: 2HKB, 2HKSB followed by suffix B, 2D, 4D, GL, or 2GLD, followed by suffix B, 2D, 4D, GL, or 2GLD; may be followed with the suffix letter C; may be followed with the suffix -MOD; with 3/4 in. conduit entries.

Note: Series HK, 2HK and HKB instrument enclosures with or without optional covers (component packaged) when suffix S is added to the Cat No it denotes 316 stainless steel construction. In addition, when suffix -4X is added to the Cat No it denotes enclosure type rating 4X.

Class I, Groups A, B, C, and D; Class II, Groups E, F and G; Class III, Types 3, 4 and 4X; Ambinet Range (-60C to + 70C) (Complete enclosures and component packaged).

- No. HKBX, may be followed by B, GL, 2D or 2GLD, may be followed by 10, 1S, 20, 2S, M20, or M25, may be followed by SM, 2S, M25, or MX. HKBX Series Cat. No. HFCX, HKXGL, HKX2D, and HKX2GLD enclosure covers.

- Outlet Boxes, Cat No SPM25131N34 and SPM25132N34, conduit 4 in. max.
- Series GR outlet boxes (component packaged); Cat No GRBB conduit 1-1/2 in max with optional covers GRB-BC, 2GRBD, 4GRBD, GL-275; Cat No GREB conduit 2 in max with

We're always here to help. Let's talk.

We're here to answer your questions and help you get started right away. Call or send us a message anytime.

Contact Us (https://www.csagroup.org/contact)

Contact an Expert (https://www.csagroup.org/contact/)

(https://www.csagroup.org/)

CSA OnDemand™ (http://store.csagroup.org/ondemand/s/?language=en_US)

Informs & Notices (/informs-notices/)

Submit an Incident Report (/submit-a-report)

Agreement on Acceptance of Components (/agreement-acceptance-components/)

CSA Communities (http://community.csagroup.org/login.jspa?referer=%252Findex.jspa)

Alerts & Recalls (/product-alerts-recalls/)

Report Suspect Counterfeit Marks (/testing-certification/marks-labels/brand-protection/reporting-suspect-counterfeit-marks)

Resources & Insights (/resources-insights/)

Standards Research (/standards/standards-research/)

CSA Group Product Listing (/testing-certification/product-listing/)

Sign up for our Newsletter (https://www.csagroup.org/newsletter/)

(http://www.facebook.com/CSAGroup/) (http://www.linkedin.com/company/csa-group/) (http://twitter.com/CSA_Group/) (http://www.youtube.com/user/csastandards/)

Contact an Expert (http://www.csagroup.org/contact/)

© 2020 CSA Group (https://www.csagroup.org)

Contact an Expert (https://www.csagroup.org/contact/)

Certification

Manufacturer: Larson Electronics LLC
Address: 9419 US-HWY 175
Kemp, Texas 75143

Declare the following equipment conforms to the standard(s) as listed:

Model: EXHL Series
Description: Explosion Proof Light

Evaluated Listings:

CE: DIRECTIVE 2014/35/EU - LOW VOLTAGE DIRECTIVE
CE: DIRECTIVE 2014/30/EU - EMC DIRECTIVE
CE: Regulation (EC) No 1907/2006 - REACH REGULATION
CE: DIRECTIVE 2015/863/EU - ROHS DIRECTIVE

The EXHL series complies with the essential protection requirements of the European Parliament of the Council Directive for Low Voltage Directive, EMC Directive, REACH Regulation, and RoHS Directive. This certification applies to all specimens manufactured in accordance to the manufacture's drawings.

Signed for and on behalf of: Larson Electronics, LLC
Place of issue: Kemp, TX

Signature: James Thomas

Name: James Thomas
Position: Operations Manager

LARSON ELECTRONICS LLC • 9419 E US HWY 175 • KEMP, TX 75143
p: 1-800-369-6671 • intl: 903-498-3363 • f: 903-498-3364 • sales@larsonelectronics.com

Certification

Manufacturer: Larson Electronics LLC
Address: 9419 US-HWY 175
Kemp, Texas 75143

Declare the following equipment conforms to the standard(s) as listed:

Model: EXHL Series
Description: Explosion Proof Light

Evaluated Listings:

CE: Regulation (EC) No 1907/2006 - REACH REGULATION
CE: DIRECTIVE 2015/863/EU - ROHS DIRECTIVE

This is to certify that products offered by Larson Electronics LLC comply with the Reduction of Hazardous Substances (RoHS) directives. Directive 2002/95/EC became effective on 1 July 2006. It restricts the use of six substances in the manufacture of electrical and electronic equipment. This directive was revised in June 2011 and is now referred to as directive 2011/65/EU. Directive 2015/863/EU amending Annex II to Directive 2011/65/EU announced plans to add four substances from 22 July 2019.

We hereby certify that the equipment specified above conforms to the Directive(s) by containing less of the restricted substances than the stated limits.

Signed for and on behalf of: Larson Electronics, LLC
Place of issue: Kemp, TX

Signature: James Thomas

Name: James Thomas
Position: Operations Manager

LARSON ELECTRONICS LLC • 9419 E US HWY 175 • KEMP, TX 75143
p: 1-800-369-6671 • intl: 903-498-3363 • f: 903-498-3364 • sales@larsonelectronics.com

Certification

Manufacturer: Larson Electronics LLC
Address: 9419 US-HWY 175
Kemp, Texas 75143

Declare the following equipment conforms to the standard(s) as listed:

Model: EXHL Series
Description: Explosion Proof Light

Evaluated Listings:

CE: Regulation (EC) No 1907/2006 - REACH REGULATION

This letter establishes the opinion of Larson Electronics LLC regarding the status, under the current European Union ("EU") Regulations on Registration, Evaluation, Authorization, and Restriction of Chemical Substances ("REACH").

REACH does not apply to manufactured products which are referred to as "completed articles". Substances (chemicals) are subject to REACH registration, NOT products.

In addition, Articles are exempt from the REACH requirements if (a) the Article does not contain a substance of very high concern or candidate substance in an amount exceeding 0.1% weight by weight, and (b) if substances present in the Article in excess of 1 ton per year per importer are not expected nor intended to be released.

Based on communication with our raw material suppliers, we conclude that to the best of our knowledge our products requiring REACH compliance do not contain any of the currently listed SVHC in concentrations of 0.1% or above.

Accordingly, we foresee no registration or pre-registration requirement for the products we supply.

Signed for and on behalf of: Larson Electronics, LLC
Place of issue: Kemp, TX

Signature: James Thomas

Name: James Thomas
Position: Operations Manager

LARSON ELECTRONICS LLC • 9419 E US HWY 175 • KEMP, TX 75143
p: 1-800-369-6671 • intl: 903-498-3363 • f: 903-498-3364 • sales@larsonelectronics.com

Frequently Asked Questions (FAQ)