Larson Electronics LLC
9419 E US HWY 175, Kemp, TX 75143
Phone: 800.369.6671

www.LarsonElectronics.com
Email: sales@LarsonElectronics.com
Fax: 903.498.3364

SPLT-1.5K-750A-30

1.5KW Solar Power Generator w/ Pneumatic Tower Mast - (6) 256W Solar Panels - Trailer Mounted

Product ID: 149174



Larson Electronics LLC manufactures a wide variety of products, including custom built to spec designs. The pictures displayed for this unit are a general representation of form factor for the product line and may not accurately represent this exact configuration in every detail due to custom builds and changes between similar products in our standard catalog. The specifics for this configuration are listed in the specification table and supporting documentation (CAD files, Dimensional Drawing, Name Plate Diagram, Wiring Diagram, etc.). This means that specific details (receptacles, plugs, wires, connections, mounting brackets, external finishes, etc.) may not be accurately represented in images vs specifications. Please review specifications and do not order based solely on images.

SPLT-1.5K-750A-30 Mobile Solar Power Generator w/ Mast

Solar System Specs:

Panels: (6) 250-Watt panels
Method of Deployment: Rotating axis, hydraulic actuator
Average charge capacity: 66 amps per hour
Panel protection: Fused combiner box
System Protection: Battery over/under and ground fault
System Voltage: 24 Volts

Battery Bank Specs:

Battery Bank: (6) 12-Volt 250aH batteries
Battery Type: 8D Sealed AGM - Maintenance Free
Battery capacity: 750ah total and 375ah usable
Inverter: None
Run Time: 57 Hrs @ 25%, 28.5 hrs @ 50%, 19 hrs @ 75%, 14.25 hrs@ 100%
Alternate Charger: Yes - 125V or 240V Charger
Charging Cable: 100` 12/3 SOOW w/ 5-20, L5-20, 6-20, or L6-20 cord cap

Mast Specs:

Mast Type: Pneumatic
Length: 8.25` to 30`
Mast Head: 56"-L x 30"-H x 4"-D
Capacity: 150 lbs
Mast Materials: Heat Treated 6063B/T5 Aluminum
Operation: Pneumatic via Electric Air Compressor

Features

Fully Solar, No Fuel Needed
1.59KW Solar Generator
Two 795W Solar Arrays - Single Trailer
Hydraulic Actuator for Raising/Lowering Panels
Heavy Duty Steel Trailer w/ Industrial Coating
Maximum Power Point Tracking (MPPT) Charge Controller
AC Battery Bank Rapid Charger w/ 100` Cable & 20A Plug
Solar Compatible Electrical Switches & Breakers
1400 CFM Cooling Fan
(6) 12V DC Deep Cycle AGM Batteries - 750AH
Sealed Batteries - Maintenance Free
Devices Operational While Charging
Up to 57 Hours Operational Runtime on Single Charge
Battery State/Charge Meter w/ Visual Display
Pneumatic Tower Extends 30` Above Trailer Deck Height
360° Mast Rotation w/ Position Key-way Locks
120V or 240V Rapid AC Battery Charger
High Temperature Outback Extreme Series Solar Charge Controller
24V DC Compressor w/ Auto On/Off Pressure Switch
Durable NEMA 3R Ventilated Housing to Protect Solar and Power Generation Components
2" Ball Hitch or 3" Pintle Hitch w/ Height Adjustment
16` x 6` Trailer bed - <13` Towing Height
8.25` to 30` Air Powered Pneumatic Mast - No Winch
3,000 lbs Towing Weight

Air Compressor: 24V DC Electric Air Compressor
Stages: Five
Stage Lengths: 88.5"L x 5.5"D Base section, 86.6"L x 4.65"D, 85.4"L x 3.85"D, 84.25"L x 3.23"D, 83.1"L x 2.6"D Top section

Trailer Specs

Materials: Steel
Bed Type: Expanded Metal
Trailer Dimensions: 208.88"-L x 71.88-W Trailer Bed

Trailer Bed Height: 22.63" Above Ground

Total Collapsed Height (w/o Devices): 125.71"

Total Collapsed Height (w/ Devices): -

Total Extended Height (w/o Devices): -

Total Extended Height (w/ Devices): -

Footprint: 208.88"-L x 100.61"-W w/ Outriggers Extended & Tongue Removed
Hitch: 2" Ball Coupler or 3" Pintle Hitch - Adjustable Height
Tongue: Removable
Finish: Industrial Grade Coating

Lighting: Stop/Tail/Turn & License Plate Lights
Wiring: 7-Pin Flat Trailer Plug (standard)
Axle: (1) 3,500 lbs
Suspension: 3,500 lbs Double Eye Leaf Springs
Brakes: Electrics Brakes w/ Breakaway Switch
Outriggers: (4) 24" Retractable Outriggers w/ 2,000 lbs Manual Leveling Jacks

Wheels: (2) 15" 5x4.5 Steel Rims

Tires: ST205/75/D15 H188
Mounting: Towable Trailer, 3,500 lbs Axle, 2" Ball Coupler
Transportation: Towing, side-mount skid pockets, 4-corner pickeye for crane transport

Dry Weight: ~2,667 lbs
Shipping: Common Freight
Options: Length- Mounting-Fixtures/ Call Us for Special Requirements

High Wind Locking Stabilization Arms for Solar Panels
4-Corner D-Rings for Transportation

Side Access Forklift Skid Pockets

4-Corner Eyelets for Crane Picking and Air Transportation

Stop/Tail/Turn Light, License Plate Lights & Reflective Tape for Highway Use
High Capacity Trailer Rated Tires
Electric Brake Setup w/ Breakaway Device
Included Safety Chains
Removable Tongue for Storage, Transportation & Long Term Deployment
4-Corner Outriggers for Stability & Safety
Expanded Metal Trailer Bed for Easy Cleaning & Removing Ice/Snow Buildup
(2) Rotating Axes
Hydraulic Actuator Provides Fast Vertical Deployment of Solar Array - No Manual Crank Winch
100` 12/3 SOOW for Battery Charger
Fused Combiner Box w/ Disconnect Switch
750 Amp Hour Combined 24V DC Battery Bank
480V Max Capacity (All Devices)

Special Orders - Special Requirements

Contact us for special requirements
Toll Free: 1-800-369-6671
Intl: 1-903-270-1187
Fax: 1-903-498-3364
E-mail: sales@larsonelectronics.com

Made in the USA

The Larson Electronics SPLT-1.5K-750A-30 Solar Power Generator with Pneumatic Tower Mast provides operators with a clean energy alternative to fuel generator-powered systems. With a maximum capacity of 480 watts for connected devices, this solar generator is equipped with a 30` pneumatic mast, automated actuators for raising and lowering the solar panels, and provides continual operation for up to 57 hours. Operators must provide their own equipment or devices to secure on the mast.
PLEASE NOTE: ANY FREE SHIPPING OFFERS DO NOT APPLY TO MASTS OR TRAILERS
Solar Generator with Mast: This solar tower includes six 265-watt solar panels, solar charging system, battery bank, timers, battery charging system and pneumatic mast mounted on trailer with outriggers and removable tongue. This 1.59KW solar generator system replenishes up to 363 amp hours of usable battery capacity per day, assuming 5.5 hours of peak charging sunlight. This system delivers 24 volts for lighting, cameras, sensors or other electronics equipment mounted atop a 30-foot collapsible, pneumatic mast.
Solar Panel Assembly: This unit is comprised of six 265-watt polycrystalline solar panels, generating a total maximum output of 480 watts. The panels are mounted to a rotating axis assembly. There are two assemblies, one on each side of the solar trailer. The panels can be rotated until they face inwards, which protects the panels during transport. When deployed, the panels are rotated until they face upwards. On most models, we offer a locking pin system, preset with a winter and summer angle position for the panels.
In order to optimize the sun capture, the panels are set to +/- 15 degrees of the latitude of the trailers location on the earth. Houston, Texas, for example, is at latitude of 30 degrees, so the winter setting is 45 degrees and the summer setting

would be 15 degrees. While this does not make a huge difference, every little bit helps. The position of the panels are set via locking stabilization arms with key holes, which increases stabilization of the solar array during deployment in with high wind applications.
Once the panels are set the correct solstice position, one section of panel is elevated into position via a hydraulic actuating system. This sets one set of 3 panels above the other section of three panels so they make a consistent plane angle to the sun. The entire panel deployment can be done easily by one person, since the axis system supports the weight of the panels during positioning. The entire process takes just a few minutes.
As part of the deployment, operators will set the four outriggers into position by pulling them out and pinning them into position. Four 2,000 lbs hand crank leveling jacks are used for leveling. The jacks can be leveled by hand crank or attachment provided for power drills. These outriggers can be extended 2` out from the side of the trailer for added stability. This will offset the effects of wind on the panels and the mast.



Solar Charging System: In this 24 volt DC system, each panel is terminated with a fused combiner box with a single lever action cut-off switch. With the switch set to the 'on' position, the combiner box passes power to the 80-amp capacity Outback Extreme charge controller.
This solar tower uses the Outback Extreme maximum power point tracking (MPPT) series charge controller system since it standard temperature threshold is more than 160 degrees Fahrenheit, due to its integrated heat sink and fan assembly. Oddly enough, most charge controllers are not rated past 104° Fahrenheit despite the fact the will always be close to direct sunlight. In the summer time in Texas, our fabrication shop is normally warmer than that, so this solar tower uses a charge controller that would support the southern heat. This charge controller maximizes the solar power gained from the PV array, and prevents over and under charging of the battery bank. We improve on that capability by shading the charge controller and adding additional air flow from the exhaust of a 1400 CFM component cooling system.
The charge controller charges a 750-amp capacity battery bank. This 24 volt battery system in comprised of 12-volt 8D deep cycle acid glass mat (AGM) batteries tied together in series. Of course, with most battery technology, the battery bank cannot be drained below 50% without destroying the batteries. With that in mind, this effectively reduces the total capacity of this system to 375 amps at 24 volts.
The panels produce approximately 11 amps per hour per panel to charge this system. On a bright sunny day, the six panels can generate and deliver up to 363 amps back to the batteries in 5.5 hours. This conservative number of 5.5 hours is pretty standard conservative number for the solar industry. Many parts of the

world have more and some have less. While this solar trailer can be optimized for the angle of the sun, the panel assemblies do not follow the path of the sun, so we use this conservative number to ensure successful operation. In areas with longer days, additional battery banks can be purchased to increase the capacity of the system. The solar trailer has capacity for 2 additional battery banks or 1 additional battery bank and supplemental generator for areas with shorter days or sporadic sunlight.

Battery Bank System: The battery bank consists of six 12-volt acid glass mat (AGM) batteries that are mounted to a removable tray. These AGM batteries are sealed and require no maintenance. The batteries are spaced apart, strapped to the battery tray and covered with a protective shield. The shield provides security and also shaded protection from the sun. The construction of the battery tray system enables the batteries to ventilate while shading and securing them. Much like a forklift battery bank, the entire battery tray system can be replaced in one operation. The trailer includes room for an additional battery bank system or a supplemental generator, both of which can be purchased separately and installed in the field.

Alternate Charging System: The battery bank is equipped with a line voltage AC rapid battery charging system that allows operators to plug the trailer into 120V or 240V AC to charge the battery bank without removing the batteries. This charging system consists of a multi-stage charging algorithm with safe start, short circuit protection, and overcharge protection. 100` of 12/3 SOOW cable terminated in a 5-20P straight blade or L5-20P twist lock cord cap for 120V systems or 6-20P straight blade or L6-20 twist lock cord cap for 240V systems allows operators to plug this unit into line voltage and charge the battery bank during long periods of cloudy days or when not in use. Connected devices can be operated while the batteries are charging.

Component Control Center: In order to ensure that the 50% threshold on the batteries is controlled, this solar trailer includes a system of min/max voltage sensors and relays that monitor the voltage produced by the batteries and will automatically shut off power distribution when the battery capacity falls below 50%. This protects the batteries from failure. We also include ground fault protection and an Outback Mate 3 monitoring system to track and log all activities related to the charger controller and battery health, including solar panel array amperage input and battery charger meter. This monitoring system has a visual display within the control box to show current status of the entire system. In the event there is an issue with the solar trailer, the SD card can be removed from the Mate 3 and sent to Larson Electronics for analysis.

All the electrical components, including the combiner panel, charge controller, over/under battery monitoring and ground fault isolation are encapsulated in a NEMA 3R job box that is bolted to the trailer. The electrical components, including switches, breakers, and cables are are compatible with solar arrays. Since most of these components are not rated for high heat, our component cooling system circulates air within the job box at 1400 CFM when the ambient temperature exceeds 90° Fahrenheit. The component control center also includes a terminal block so that customers can mount additional electronic gear without interfering with the charging systems. The job box that contains the component control system includes locks for security purposes.

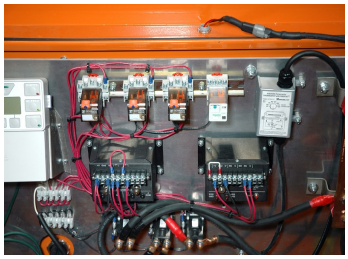

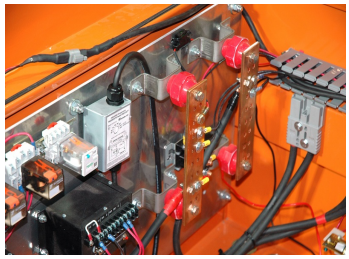

Click Photos to Enlarge





Wire Management: The trailer itself houses a built in wire raceway that brings power from the component control center and batteries to the mast. At the base of the mast there is an access panel for making connections from the power source to the cabling within the pneumatic mast.
Pneumatic Mast: The aluminum pneumatic mast reaches 30` in height above the deck of the trailer via the use of a low voltage air compressor located within the job box. The compressor is equipped with a pressure switch that maintains the pressure within the mast. Once the mast is deployed from the component control center, its operation is automated. The air compressor will turn on briefly when the pressure in the mast falls below the fully inflated threshold. In normal operation, the air compressor may turn on once every few days for about 5 minutes to top off the mast. When it is time to take the mast down for transport, the operator simply release the pressure switch and the mast will slowly release pressure and lower to its full collapsed height of 8.25` above deck.
At the top of the mast, we include a mounting bracket that is 44" wide and 2" by 2" by 1/4" thick, which provides a strong and stable platform for standard payloads up to 150 lbs. of electronics, including lights, camera or sensors. These mounting brackets can be built to customer specifications to include the holes necessary to mount their gear. The mast can be rotated a full 360°. By loosening the T-Handle, operators can rotate the mast with easy in either direction. The mast can be positioned in one of four different keyhole lock-ways to ensure the mast does not move during higher winds, and locked back in place by re-tightening the T-handle. This ensures the mast does not move once position is set. Alternatively, the mast can be locked into place by tightening the T-handle down in between the keyholes, however, higher wind speeds may offset the mast head slightly after position without guy wires. The mast itself spins freely with easy once the T-handle has been loosened, and can typically be rotated with a single hand.
Trailer: The trailer itself is built on a 3500lb rated axle and is approximately 16` long and 6` wide. The trailer is equipped with a removable tongue for storage, transport and security purposes. The tongue features an adjustable hitch, allowing operators to raise or lower the height of the hitch for towing purposes. Hitch options include 2" ball coupler and 3" pintle hitch. Safety chains come standard. For an additional charge, we offer removable wheels in addition to the removable tongue for extra security. The four built in outriggers can be slid out from the frame and pinned into place. A standard crank style support leg can be used to secure each outrigger to the ground. The outrigger feet are over-sized and equipped with through holes for additional ground anchoring mechanisms. D-rings allow the trailer frame to be anchored down for long term deployment and high wind applications. The trailer has an industrial grade finish for rust and corrosion resistance.
The trailer is equipped with an electric brake setup and electronic safety breakway device. All safety lighting on the trailer meet or exceed DOT and FMVSS regulations. This unit is equipped with stop, tail, turn signals, and license plate lights. Wiring is provided by an industrial grade trailer 7-pin flat trailer plug (other options available upon request). Reflective tape along the sides of the trailer

provides increased night time visibility. This trailer is approved for highway use, and will clear standard height interstate bridges.

Solar Tower Runtime

Operation	Lumen Output (w/ Lights)	Hours*
25% Load	10,800	57 hrs
50% Load	21,600	28.5 hrs
75% Load	32,400	19 hrs
100% Load	43,200	14.25 hrs

*Hourly runtime based on maintaining 50% battery capacity. A safety factor of 90aH is included in these calculations to account for unforeseen loss in real world scenarios to provide accurate runtime without damaging the battery bank of the unit

This solar powered tower generator is shipped via common freight. Each unit is equipped with side mounted skid pockets for loading with fork lifts, and 4-corner mounted eyelets allow for crane picking and air transportation methods. The 4-corner eyelets also allow operators to secure this trailer in transportation, ensuring the unit does not move during transit.

Applications: Remote locations, portable communication systems, light towers, remote sensors, telecommunications, elevated mounting applications and more.

Customization: Larson Electronics is a manufacturer of light tower systems and can customize systems to meet custom requirements. Contact us at 1-800-369-6671 or sales@larsonelectronics.com to learn more.

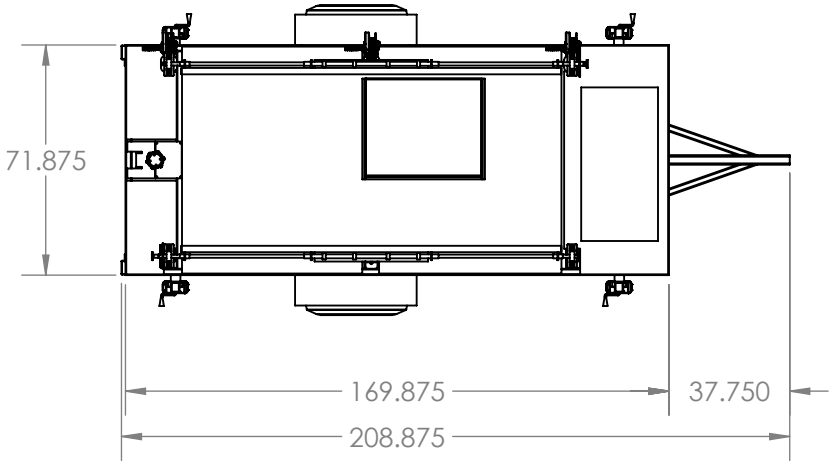

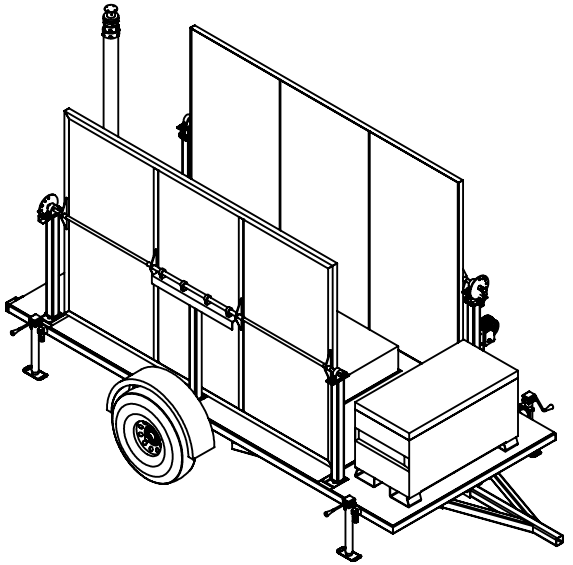

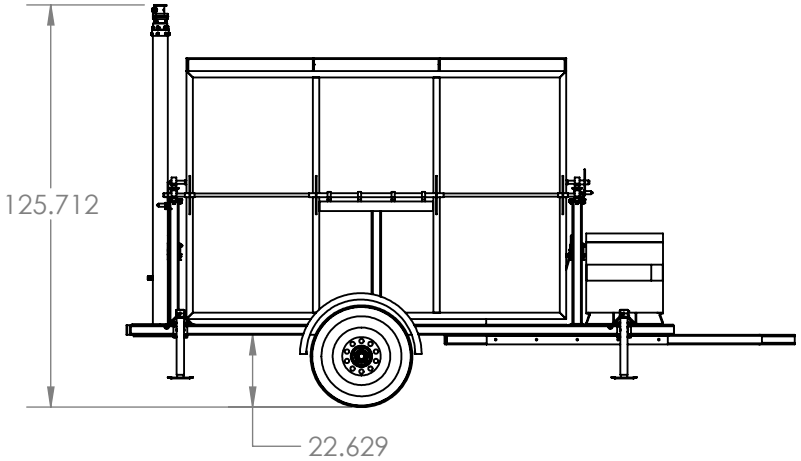

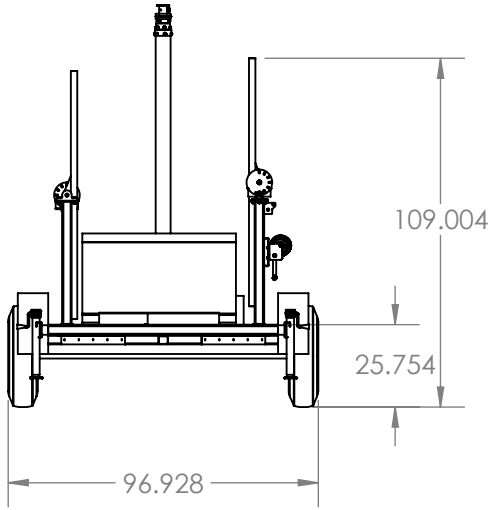

Weight: ~2,667 lb

PROPRIETARY AND CONFIDENTIAL
THE INFORMATION CONTAINED IN THIS DRAWING IS THE SOLE PROPERTY OF LARSON ELECTRONICS LLC. ANY REPRODUCTION IN PART OR AS A WHOLE WITHOUT THE WRITTEN PERMISSION OF LARSON ELECTRONICS LLC IS PROHIBITED.

UNLESS OTHERWISE NOTED:

Angle	+/- .5 deg
.X	+/- .02
.XX	+/- .01
.XXX	+/- .005

FINISH			
SURFACE AREA [sq. in]			NAME
DIMENSIONS ARE IN INCHES		DRAWN	CHRISTOPHER THAUER
MATERIAL		CHECKED	N/A
DO NOT SCALE DRAWING		DATE	1/15/2025

TITLE:

SPLT-1.5K-750A-30-2in.Ball-120V-5.20

SIZE	DWG. NO.	REV
A		

SCALE: NTS | SHEET 1 OF 2

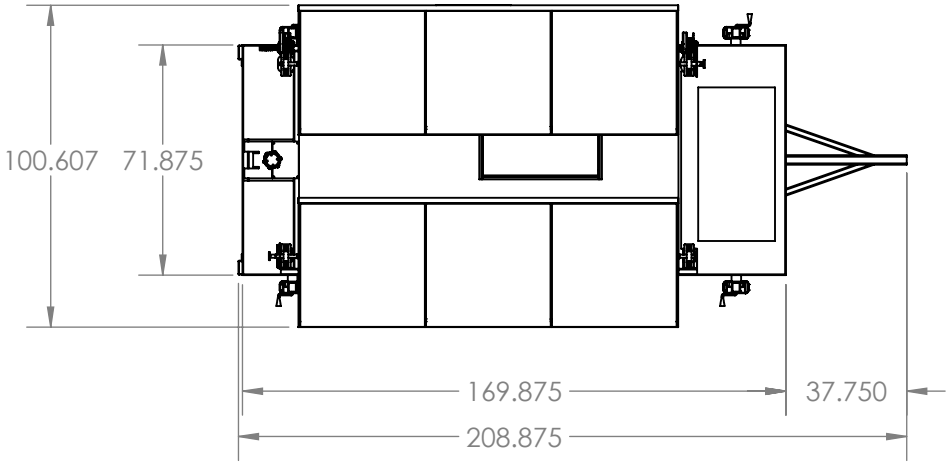

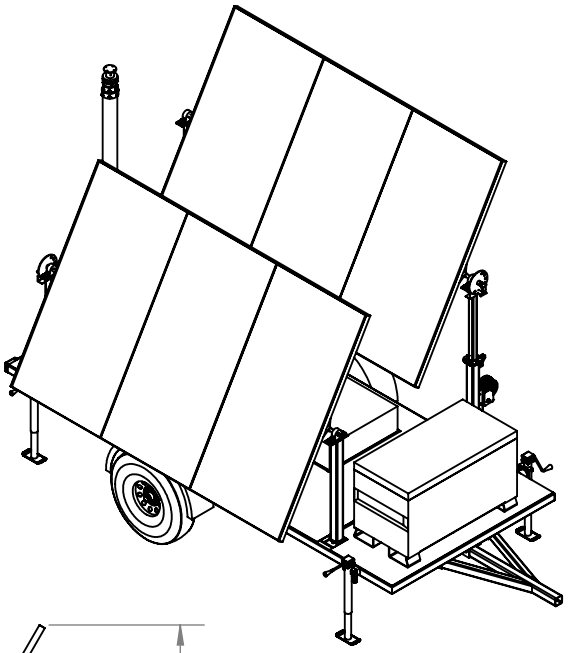

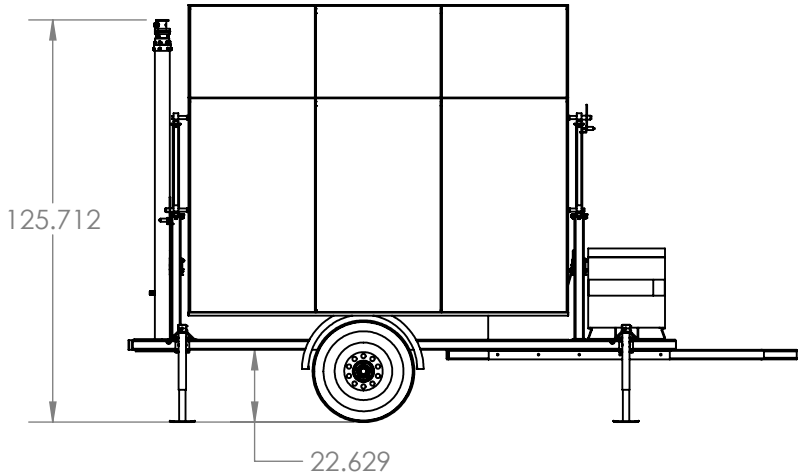

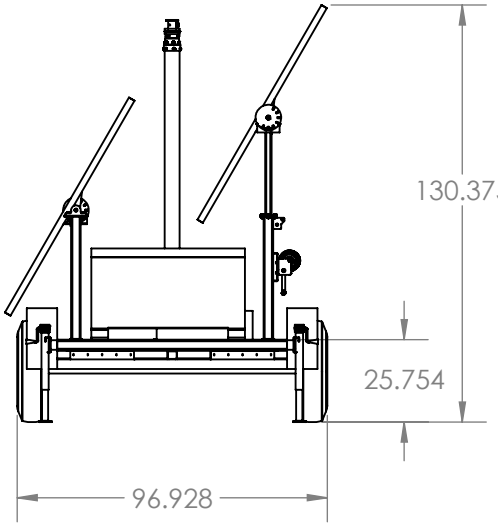

Weight: ~2,667 lb

PROPRIETARY AND CONFIDENTIAL
THE INFORMATION CONTAINED IN THIS DRAWING IS THE SOLE PROPERTY OF LARSON ELECTRONICS LLC. ANY REPRODUCTION IN PART OR AS A WHOLE WITHOUT THE WRITTEN PERMISSION OF LARSON ELECTRONICS LLC IS PROHIBITED.

UNLESS OTHERWISE NOTED:

Angle	+/- .5 deg
.X	+/- .02
.XX	+/- .01
.XXX	+/- .005

FINISH			
SURFACE AREA [sq. in]			NAME
DIMENSIONS ARE IN INCHES		DRAWN	CHRISTOPHER THAUER
MATERIAL		CHECKED	N/A
DO NOT SCALE DRAWING		DATE	1/15/2025

TITLE:

SPLT-1.5K-750A-30-2in.Ball-120V-5.20

SIZE	DWG. NO.	REV
A		

SCALE: NTS | SHEET 2 OF 2









Frequently Asked Questions (FAQ)