Larson Electronics LLC
9419 E US HWY 175, Kemp, TX 75143
Phone: 800.369.6671

www.LarsonElectronics.com
Email: sales@LarsonElectronics.com
Fax: 903.765.7664

EPL-EMG-48-2L-LED-D-V2

0-10V Dimmable Explosion Proof Emergency LED light - 4 foot 2 lamp - Backup Ballast - C1D1/C2D1

Product ID: 147795



Image: EPL-EMG-48-2L-LED-D-V2

Larson Electronics LLC manufactures a wide variety of products, including custom built to spec designs. The pictures displayed for this unit are a general representation of form factor for the product line and may not accurately represent this exact configuration in every detail due to custom builds and changes between similar products in our standard catalog. The specifics for this configuration are listed in the specification table and supporting documentation (CAD files, Dimensional Drawing, Name Plate Diagram, Wiring Diagram, etc.). This means that specific details (receptacles, plugs, wires, connections, mounting brackets, external finishes, etc.) may not be accurately represented in images vs specifications. Please review specifications and do not order based solely on images.

EPL-EMG-48-2L-LED-D-V2 Explosion Proof
NRTL Listed for United States & Canada
Dimensions: W-11.25" x L-52" x H-8.5 "
Weight: 60 Lbs
Voltage: 120-277V AC or 11-25V AC/DC
Total Watts: 56 watts (28 Watts Per Lamp)
Total Lumens: 7,000 (3,500 Per Lamp)
Lumens on Battery Power: 3,500 (1 Lamp)
LED Lamp Life Expectancy: 50,000+ Hours
Luminous Efficacy: 125 Lumens per Watt
Color Temp: 5600K, 4500K, 3000K
Color Rendering Index: >80
Beam Angle: 150°
Power Efficiency: 90%
Power Factor: >0.95
Battery AC Input Voltage: 120/277V AC 60Hz
Battery AC Input Current: 90 mA
Battery AC Input Power Rating: 9.5W
Battery Output Current: 120V @ 165mA - 277V @ 72mA
Illumination Time: 90+ Minutes
Battery Type: High Temp, Maintenance Free, Nickel Cadmium
Battery Lifespan: 7 to 10 Years
Battery Charge Current: 250 mA
Battery Recharge Time: 24 Hours
Ambient Operating Temp Range:0° C to +50°C
Operating Temp Rating: T6 Rated

Ratings/Approvals
Class 1 Division 1, Groups C and D T6
Class 1 Division 2, Group A,B,C,D
Class 2, Division 1 & 2, Groups E,F,G
NRTL Certified to UL 595 Marine Type (Saltwater)
NRTL Certified to UL 844, UL 924
NRTL Certified to UL 1598 Marine Type
Certified Canadian Standards
Listed for Paint Spray Booths
California Title 20 & Title 24 Compliant
IP67 Rated - Waterproof
T6 Temperature Rating
NEMA 4X
LEL Listed LED Lamps
Approved for Confined Spares
Silicone Free
Factory Sealed Fixture
Failsafe Lighting
Emergency Battery Backup
90+ Minute Runtime
Made in the USA
Switch Leg for Powering Light On/Off

Minimum Operating Temp: 0°C
Maximum Case Temp: +50°C
Housing Material: Cast Aluminum End Caps & Battery Enclosure, Aluminum Reflectors - Copper Free
Lens Material: Hardened Borosilicate Glass Tubes
Gasket Material: Buna Rubber O-Rings
Mounting: Surface Standard - Pendant Optional
Wiring Hub: 1/2" NPT

Special Orders - Special Requirements

Contact us for special requirements

Toll Free: 1-800-369-6671
Intl: 1-903-270-1187
Fax: 1-903-765-7664
E-mail: sales@larsonelectronics.com

Made in the USA

The Larson Electronics EPL-EMG-48-2L-LED-D-V2 Dimmable Explosion Proof Emergency LED Light Fixture is NRTL Listed for United States and Canada approved Class 1 Division 1 & 2 and Class 2 Division 1 and 2 for areas where flammable chemical/petrochemical vapors exist or have the potential to exist. This failsafe explosion proof LED light has a T6 temperature rating and carries a paint spray booth light certification, making it ideal for applications such as paint booths, oil rigs, offshore applications, petrochemical, manufacturing, chemical storage, water treatment centers, and food processing plants.

This four foot, two lamp dimmable emergency LED fixture is ideal for operators seeking a top quality explosion proof light that will reduce operating costs, improve lighting quality and reduce downtime incurred from frequent servicing intervals. The EPL-EMG-48-2L-LED-D-V2 is equipped with Larson Electronics' specially designed LED T-series bulbs which produce 7,000 lumens, resulting in 25% more foot candles of illumination at 8 feet as compared to standard T8 lamps when measured with an Extech light meter. Our LED-T series bulbs are visibly brighter than standard T8`s and have consistently surprised many of our customers with their unexpectedly high light output levels.

We now offer our second generation LED tube lamps with this fixture which have increased this hazardous location light's performance. This two lamp explosion proof LED linear fixture is lighter in weight, has a slimmer profile, and produces more light than traditional explosion proof fluorescent fixtures. The four foot long LED tube design bulbs included with this unit are rated at 50,000 hours of service life, which is over twice as long as standard T8 bulbs.

This emergency backup only fluorescent light works, mounts and is wired like our EPL-48-2L-LED explosion proof integrated LED light fixtures. The main difference is that we add a battery backup unit that adds emergency light functionality to the fixture. With an integrated emergency ballast, this explosion proof LED light will continue to operate one LED lamp for 90 minutes at 3,500 lumens after the main electrical power to the light is severed. Once standard electrical power is restored, the emergency battery pack will be recharged. The battery backup unit includes a switched leg for turning the light fixture on/off without kicking the unit into emergency mode.

This fixture carries a T6 temperature rating and is approved for Class I Division 1, Groups C and D, Class I, Division 2, Group A, B, C and D, and Class II, Division 1 and 2, Groups E, F and G environments where flammable or combustible gases, vapors, dusts, fibers, and flying exist or stand the potential to exist. This LED linear fixture is approved for use in confined spaces. Click here to read the NEC description for explosion proof and hazardous locations.

The included dimmable LED lamps have a 50,000+ hour service life, both of which result in extreme efficiency and greatly reduced maintenance costs. These fluorescent style LED lamps have internal drivers, eliminating external power components. The solid state design of the LED

lamps give this fixture superior resistance to damage from vibration, extremes in temperature and a lamp service life over twice that of standard fluorescent bulbs. This second generation lamp is offered in 5600K cool white, 4500K natural white, and 3000K warm white. Our standard unit ships with 5600K unless different color temperature is specified.

These dimmable 28 watt LED tubes work with standard 0-10 dimming controllers. Lumen output is 125 lumens per watt for a total of 3,500 lumens per bulb. While fluorescent lamps are omni-directional and illuminate 360°, the LED style replacement lamps are directional and offer a 160° beam spread. This allows for directed illumination where it is needed and not wasting light via reflectors or or over illuminating areas. This dimming LED tube uses electronic silicon control dimming. We have tested these lamps on all Lutron and Leviton electronic dimmers, such as the Leviton 6633-PLW. Please note: the dimmer switch must be installed outside the hazardous environment or use an explosion proof dimmer switch. Larson Electronics offers an explosion proof dimmer switch that can be installed within the hazardous location.

Unlike the glass tube design of traditional fluorescent lamps, these LED T-Style lamps have no filaments or fragile housings to break during operation. Instead of using a combination of gases to produce light, light emitting diodes (LEDs) use semi-conductive materials that illuminate when electric current applied and emitting light. The LED assembly is mounted to the "tube" constructed from extruded aluminum, with a polycarbonate lens protecting the LEDs. With LED lights, there is no warm up time or cool down time before re-striking and provide instant illumination when powered on, adding to the reliability of LED technology. By nature, LED light sources run significantly cooler than fluorescent lamps, reducing the chance of accidental burns and increased temperatures due to heat emissions. This solid state design of light emitting diodes provides a more reliable, stable, durable, and energy efficient light source over traditional fluorescent lighting.

The 28 watt LED lamps produce 25% more illumination than standard T8 bulbs while offering lower amp draw and increased reliability. Each lamp produces 3,500 lumens at 125 lumens per watt, for a combined 7,000 total lumen light output. An EPL-EMG-48-2L-T8 explosion proof fluorescent light, with a combined total of 64 watts, draws 0.54 amps at 120 volts AC. This LED version of the same light, with a total of 46 watts, draws only 0.38 amps at 120 volts AC. The EPL-EMG-48-2L-LED-D-V2 is universal voltage, not multi-tap, and operates on any voltage from 120V to 277V AC 50/60hz without any modifications. We also make a 12/24V AC/DC version for low voltage applications for AC or DC power.

Energy Consumption Comparison

	T5HO	T8	LED
Wattage	108 watts	64 watts	56 watts
Amp Draw @ 120V AC	0.90 amps	0.54 amps	0.47 amps
Amp Draw @ 220V AC	0.49 amps	0.29 amps	0.25 amps
Amp Draw @ 240V AC	0.45 amps	0.27 amps	0.23 amps
Amp Draw @ 277V AC	0.39 amps	0.24 amps	0.20 amps
Amp Draw @ 12V DC	9 amps	5.34 amps	4.67 amps
Amp Draw @ 24V DC	4.5 amps	2.67 amps	2.34 amps
Lamp Life Expectancy	20,000 hours	24,000 hours	50,000 hours
Operation cost per year	$56.77	$33.64	$29.43

(12hs/day @ 12c/kWh)

Our EPL-48-2L-LED-D-V2 LED light fixture is NRTL Listed for United States and Canada approved for use in paint spray booths. Please note, according to the NEC, using threaded rigid pipe does not require additional seal offs with this fixture. An EYM and seal off is necessary for flex conduit or other non-rigid pipe implementations.

Field Serviceability: This explosion proof LED light fixture is field serviceable. All major internal components can be purchased from Larson Electronics and installed by a licensed electrician with basic tools. With most explosion proof fixtures, the fixture must be returned to the manufacturer for repair work, which presents downtime and long turn around times for repair work. Field serviceability allows operators to perform service work without having to return the fixture to the manufacturer in the event of damage or failure. This fixture has two individual led bulbs. Each LED lamp has its own internal driver specific to that bulb and every bulb is serviceable. Should a lamp failure occur, the other lamp will continue to operate until replaced. The lamps are isolated from each other, so one lamp failure does not impact the second lamp. The other added benefit of the LED bulbs vs integrated LEDs is the bulb can be upgraded as technology advances, providing less wattage for the same light or more light output for the same wattage.

Mounting Options: Unless otherwise specified, our standard, most popular configuration is the bracket end mounting shown enlarged below. We also offer a pendant mount for those needing to suspend the fixture away from the ceiling surface (i.e. suspend from pipe or conduit). Additional mounting configurations can be customized to meet the requirements on the application. Please contact us for special mounting configurations.

Surface Mount (Standard)



Click Photo to Enlarge



Click Photo to Enlarge



Click Photo to Enlarge

Adjustable Surface Mount Brackets: Each bracket is cinched to the bracket mounting peg on each side of the light. The angle of the bracket is set by tightening two cap screws on either side of the bracket. The cap screws act as a set screw. The bracket itself is mounted via a single bolt hole at the top the bracket. There are two brackets, one on each end of the light. Once the brackets are mounted to a surface (ceiling, floor or wall), the light fixture can be removed from the brackets by loosening the cap screws that hold the bracket to the mounting peg.



Pendant Mount (Optional)





Click Photo to Enlarge

3 Conduit Positions

Click Photo to Enlarge

Suspension Mounting: Pendant mount fixtures hang from the ceiling and are suspended by rigid pipe. Each fixture features a 1/2” NPT junction box on one end, and a 1/2” NPT adjustable L-bracket on the other end of the fixture. Operators bring rigid pipe down to the threaded mounting hubs. Wiring is fed down through the rigid pipe to the junction box and tied in to the fixture’s lead wires, completing the electrical connection. The adjustable L-shape mounting bracket provides support for the opposite end of the fixture.

Suggested Applications: Paint spray booths, aircraft maintenance, oil drilling rigs, refineries, solvent and cleaning areas, gas processing plants, chemical manufacturing, waste treatment plants, gas processing plants.

Made in USA Quality

1. Each unit dielectrically tested.
2. Fixture arrives assembled and lamped to reduce installation time and cost. Adjustable mounting brackets enable the operator to choose any mounting angle for the fixture.
3. Fixture constructed of extruded corrosion resistant copper free aluminum alloy
4. No ballast box. No ballast to replace. We simply run the black wire to one end of the bulb and white wire to the other.
5. Heavy gauge extruded aluminum reflectors with high gloss reflective finish. Resists dents and corrosion.
6. A wrench is used to unscrew the end caps for relamping the fixture, while some competitive models require the “tap and knock off” method to loosen the end cap.
7. Explosion proof, impact and heat resistant Pyrex tubes provide lamp protection.

Superior LED Benefits

1. 50,000 hour lifespan.
2. Can SAVE 50% or more on energy.
3. Qualifies retrofit projects for financial incentives, including utility rebates, tax credits and energy loan programs.
4. Reduces energy use and prolongs life-spans of peripheral cooling units (A/C, refrigeration)
5. 100% recyclable.
6. No toxins-lead, mercury.
7. No UV light, infrared radiation or CO2 emissions.
8. Qualifies buildings for LEED and other sustainable business certifications.
9. Bright, even light maintains consistent color over time.
10. Instant on/off – No flickering, delays or buzzing.
11. Very good color rendering.
12. Vibration/impact resistant.
13. Significantly cooler operation.

14. Less frequent outages, higher output improves workplace safety.

REV	DESCRIPTION	DATE
A	PRODUCTION RELEASE	11/29/2021

EPL-EMG-48-2L-LED-D-V2-SFC-56K

LARSON ELECTRONICS®

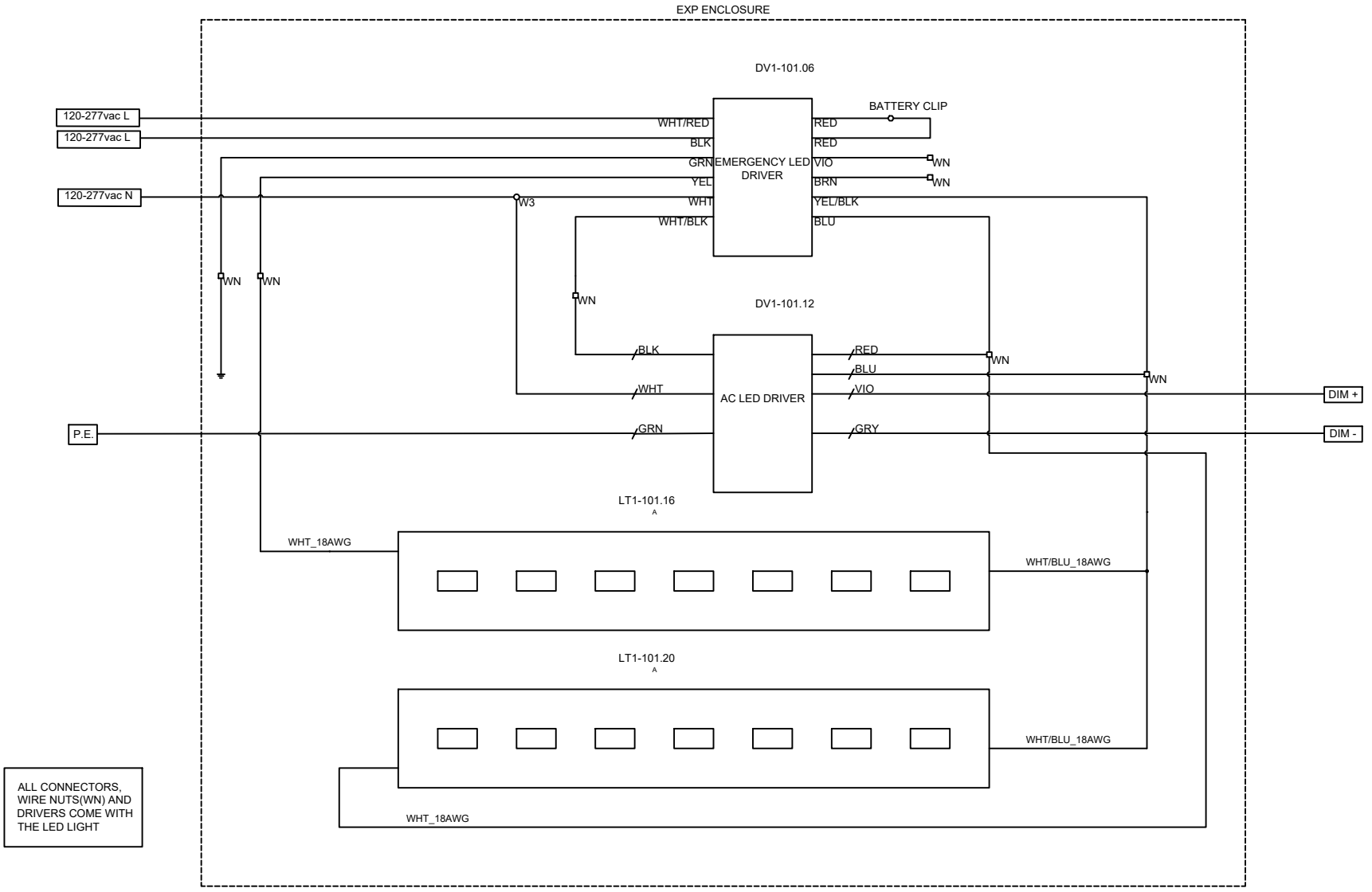

TAGS	QTY	CATALOG	DESCRIPTION
LT1-101.23	1	UNV00004447	G2 LED lamps - w/ emergency ballast - 120-277VAC

LARSON ELECTRONICS
9419 E US HWY 175,
KEMP, TX 75143

TITLE			
EPL-EMG-48-2L-LED-D-V2-SFC-56K			
DRAWN BY	DATE	REV	
A. CIBISOVS	11/29/2021	A	
CHECKED BY	SHEET #	DRAWING #	
R. BLACK	1 OF 1	101	

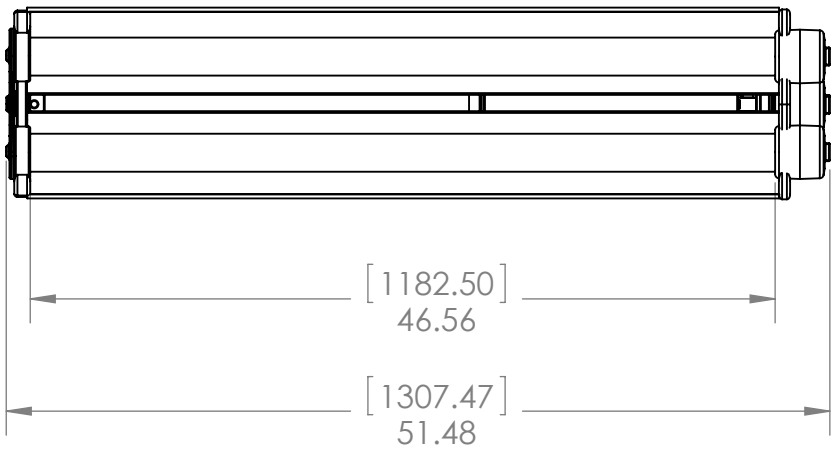

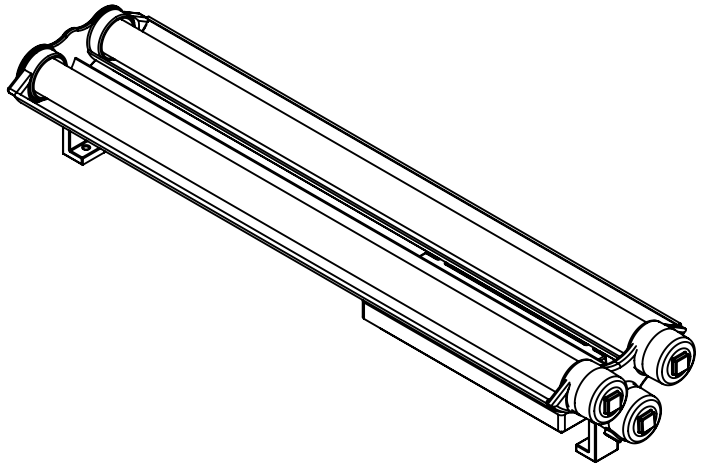

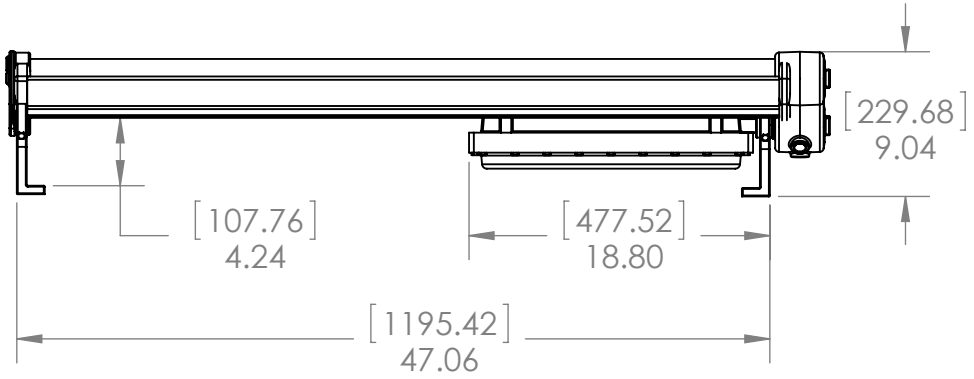

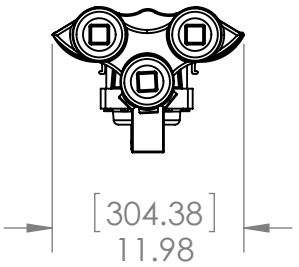

Larson Electronics

TITLE:

EPL-EMG-48-2L-LED-45D-SFC

PROPRIETARY AND CONFIDENTIAL
THE INFORMATION CONTAINED IN THIS DRAWING IS THE SOLE PROPERTY OF LARSON ELECTRONICS LLC. ANY REPRODUCTION IN PART OR AS A WHOLE WITHOUT THE WRITTEN PERMISSION OF LARSON ELECTRONICS LLC IS PROHIBITED.

		NAME
DIMENSIONS ARE IN INCHES	DRAWN	CHRIS THAUER
MATERIAL	CHECKED	JEREMY BLANKENSHIP
DO NOT SCALE DRAWING		

SIZE	DWG. NO.	REV
A		

SCALE: 1:12 | SHEET 1 OF 1

5 4 3 2 1

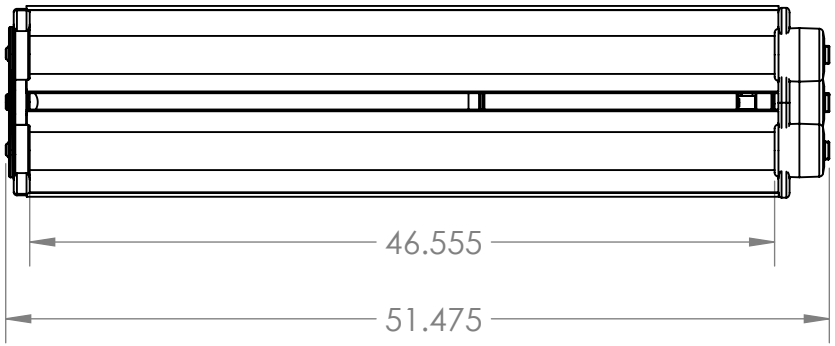

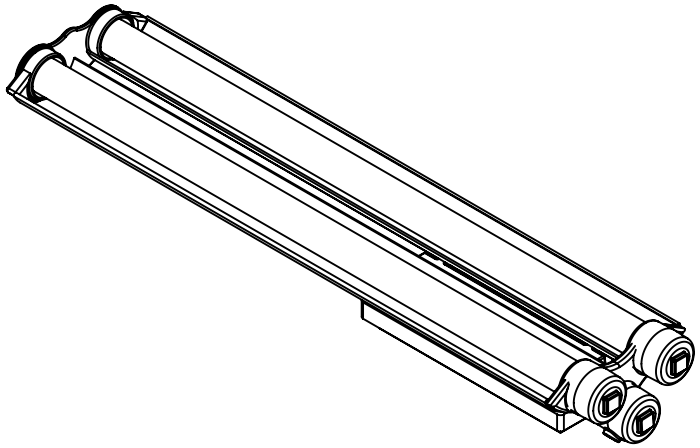

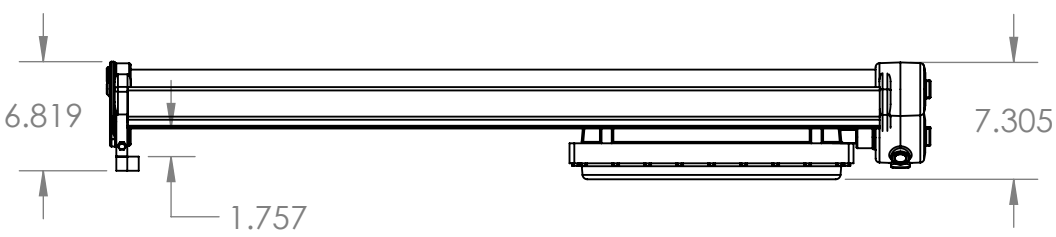

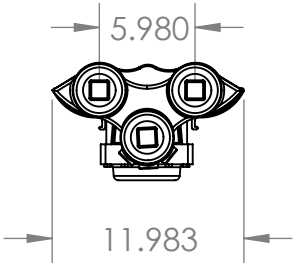

Larson Electronics

TITLE:

EPL-EMG-48-2L-LED-45D-PND

PROPRIETARY AND CONFIDENTIAL
THE INFORMATION CONTAINED IN THIS DRAWING IS THE SOLE PROPERTY OF LARSON ELECTRONICS LLC. ANY REPRODUCTION IN PART OR AS A WHOLE WITHOUT THE WRITTEN PERMISSION OF LARSON ELECTRONICS LLC IS PROHIBITED.

		NAME
DIMENSIONS ARE IN INCHES	DRAWN	CHRIS THAUER
MATERIAL	CHECKED	JEREMY BLANKENSHIP
DO NOT SCALE DRAWING		

SIZE	DWG. NO.	REV
A		

SCALE: 1:12 | SHEET 1 OF 1

5 4 3 2 1

TILTED TO SURFACE MOUNT

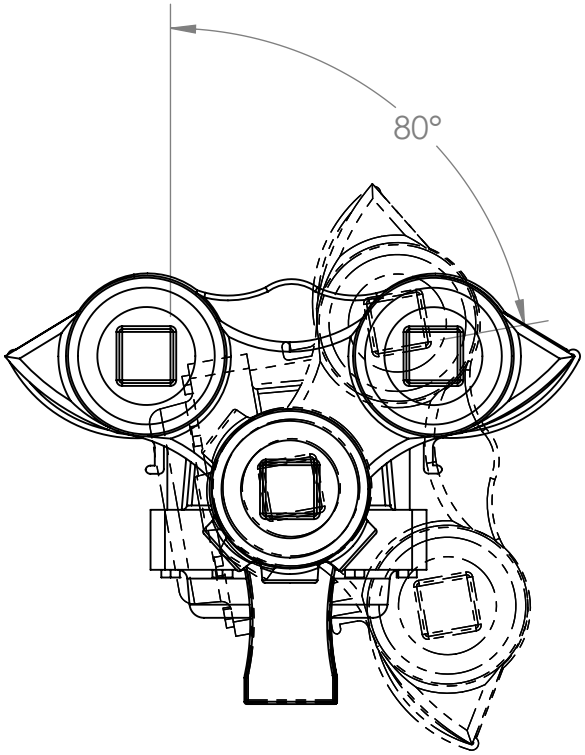

TILTED TO A WALL

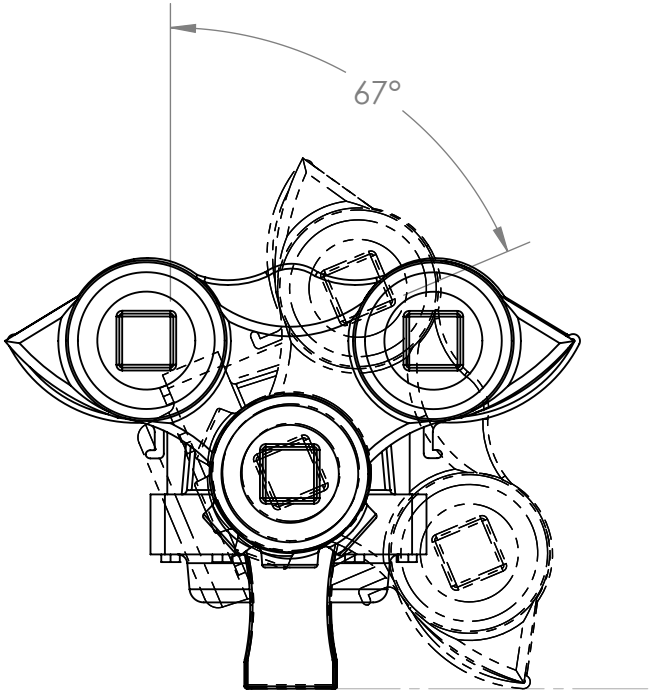

Larson Electronics

TITLE:

EPL-48-2L-SFC
MAXIMUM TILTING ANGLES

		NAME
DIMENSIONS ARE IN INCHES	DRAWN	CHRIS THAUER
MATERIAL	CHECKED	JEREMY BLANKENSHIP
DO NOT SCALE DRAWING		

SIZE	DWG. NO.	REV
A		

SCALE: 1:4 SHEET 1 OF 1

PROPRIETARY AND CONFIDENTIAL
THE INFORMATION CONTAINED IN THIS DRAWING IS THE SOLE PROPERTY OF LARSON ELECTRONICS LLC. ANY REPRODUCTION IN PART OR AS A WHOLE WITHOUT THE WRITTEN PERMISSION OF LARSON ELECTRONICS LLC IS PROHIBITED.

5 4 3 2 1

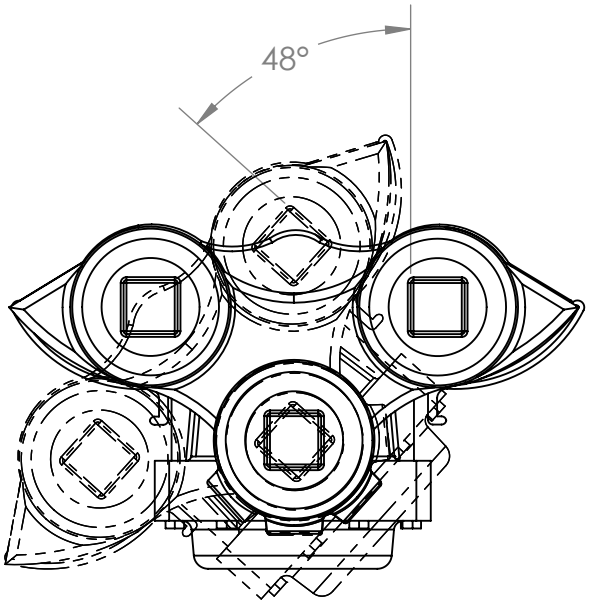

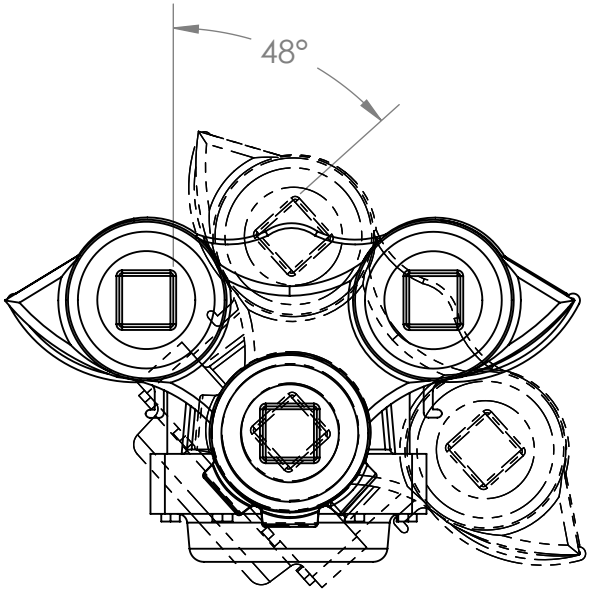

Larson Electronics

TITLE:

EPL-48-2L-PND
TILTING ANGLES

PROPRIETARY AND CONFIDENTIAL
THE INFORMATION CONTAINED IN THIS DRAWING IS THE SOLE PROPERTY OF LARSON ELECTRONICS LLC. ANY REPRODUCTION IN PART OR AS A WHOLE WITHOUT THE WRITTEN PERMISSION OF LARSON ELECTRONICS LLC IS PROHIBITED.

		NAME
DIMENSIONS ARE IN INCHES	DRAWN	CHRIS THAUER
MATERIAL	CHECKED	JEREMY BLANKENSHIP
DO NOT SCALE DRAWING		

SIZE	DWG. NO.	REV
A		

SCALE: 1:4 | SHEET 1 OF 1

5 4 3 2 1

EPL-48-2L

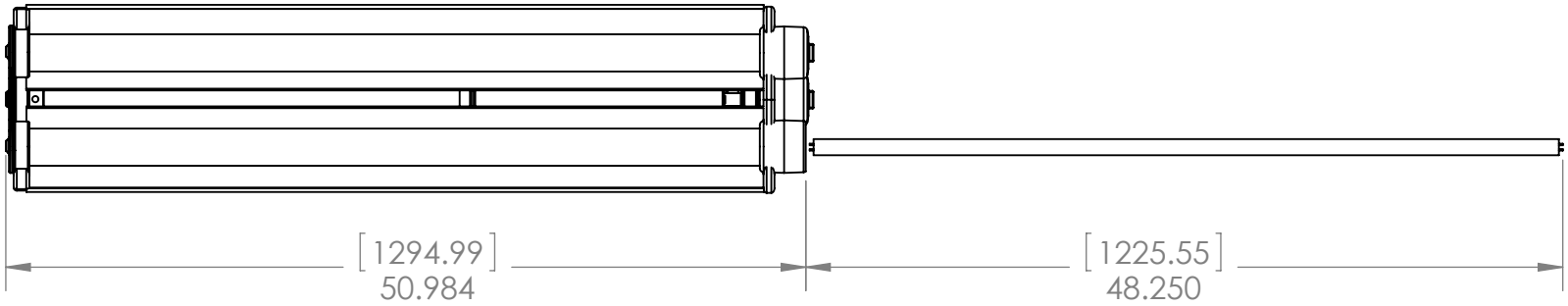

EPL-24-2L

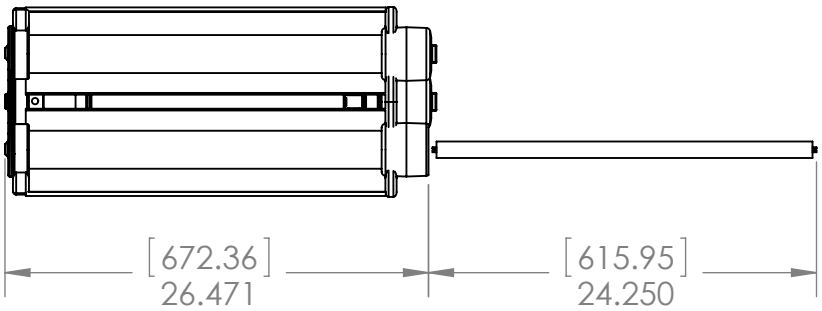

Larson Electronics

TITLE:

PROPRIETARY AND CONFIDENTIAL
THE INFORMATION CONTAINED IN THIS DRAWING IS THE SOLE PROPERTY OF LARSON ELECTRONICS LLC. ANY REPRODUCTION IN PART OR AS A WHOLE WITHOUT THE WRITTEN PERMISSION OF LARSON ELECTRONICS LLC IS PROHIBITED.

		NAME
DIMENSIONS ARE IN INCHES	DRAWN	CHRIS THAUER
MATERIAL	CHECKED	JEREMY BLANKENSHIP
DO NOT SCALE DRAWING		

SIZE	DWG. NO.	REV
A		
SCALE: 1:12		SHEET 1 OF 1

5 4 3 2 1

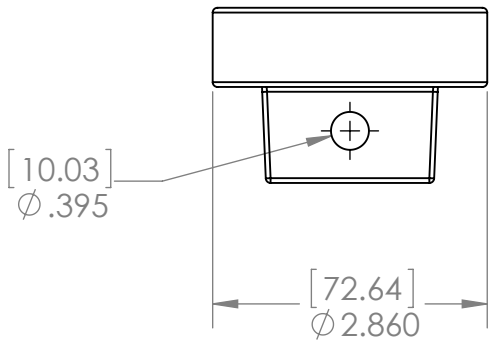

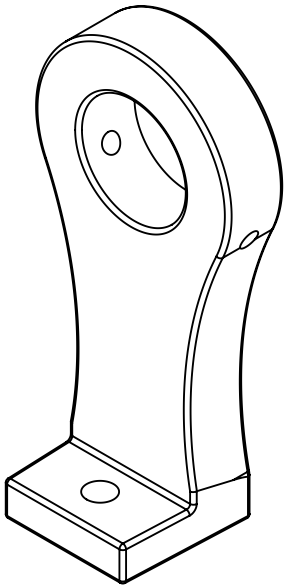

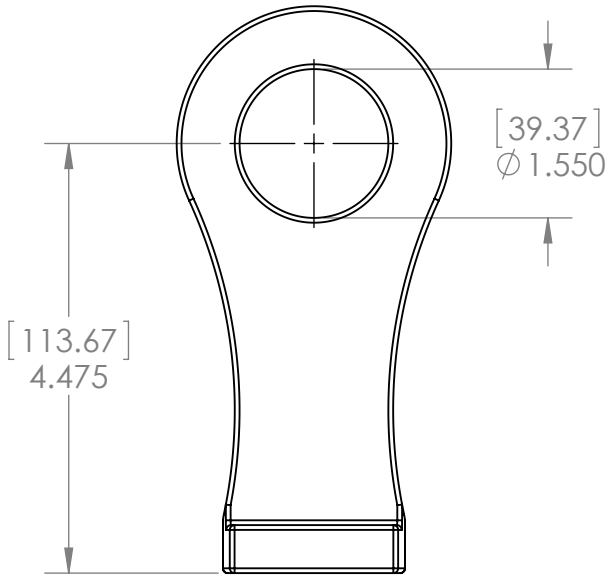

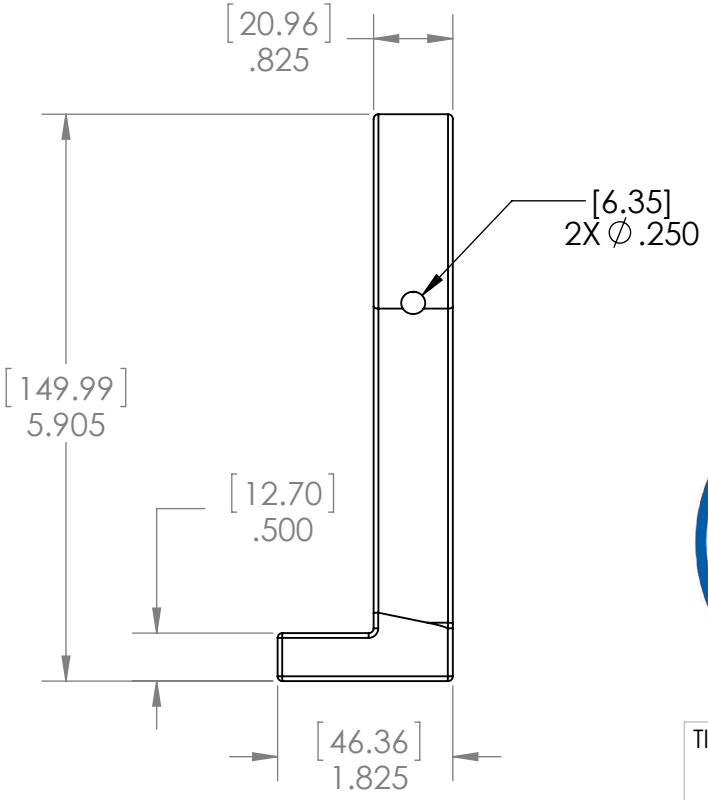

Larson Electronics

TITLE:

EPL SURFACE MOUNT

PROPRIETARY AND CONFIDENTIAL
THE INFORMATION CONTAINED IN THIS DRAWING IS THE SOLE PROPERTY OF LARSON ELECTRONICS LLC. ANY REPRODUCTION IN PART OR AS A WHOLE WITHOUT THE WRITTEN PERMISSION OF LARSON ELECTRONICS LLC IS PROHIBITED.

		NAME
DIMENSIONS ARE IN INCHES	DRAWN	CHRIS THAUER
MATERIAL	CHECKED	JEREMY BLANKENSHIP
DO NOT SCALE DRAWING		

SIZE	DWG. NO.	REV
A		

SCALE: 1:2 SHEET 1 OF 1

5 4 3 2 1

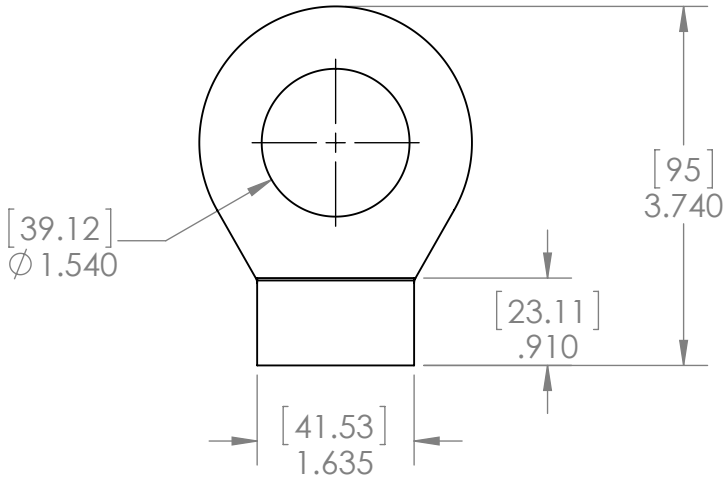

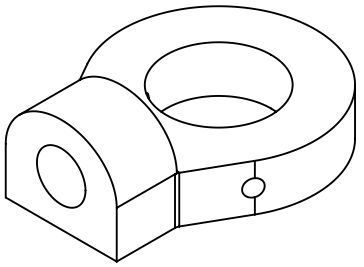

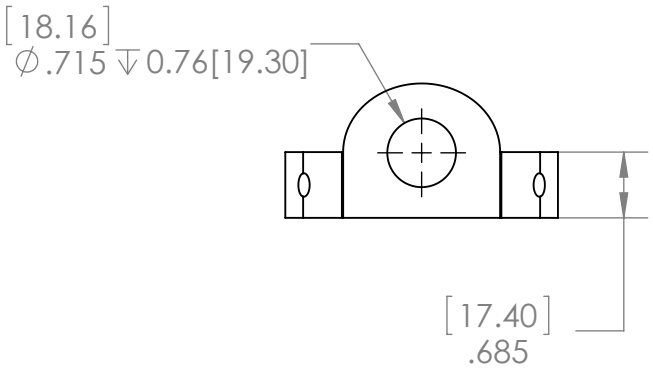

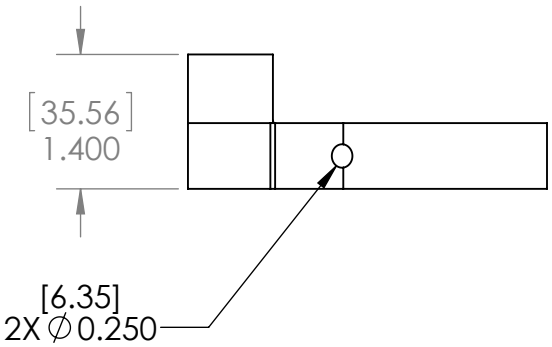

Larson Electronics

TITLE:

EPL PENDANT MOUNT LEG

PROPRIETARY AND CONFIDENTIAL
THE INFORMATION CONTAINED IN THIS DRAWING IS THE SOLE PROPERTY OF LARSON ELECTRONICS LLC. ANY REPRODUCTION IN PART OR AS A WHOLE WITHOUT THE WRITTEN PERMISSION OF LARSON ELECTRONICS LLC IS PROHIBITED.

		NAME
DIMENSIONS ARE IN INCHES	DRAWN	CHRIS THAUER
MATERIAL	CHECKED	JEREMY BLANKENSHIP
DO NOT SCALE DRAWING		

SIZE	DWG. NO.	REV
A		

SCALE: 1:2 | SHEET 1 OF 1

5 4 3 2 1

Larson Electronics LLC
9419 E US HWY 175, Kemp, TX 75143
Phone: 800.369.6671

www.LarsonElectronics.com
Email: sales@LarsonElectronics.com
Fax: 903.765.7664



Larson Electronics LLC
9419 E US HWY 175, Kemp, TX 75143
Phone: 800.369.6671

www.LarsonElectronics.com
Email: sales@LarsonElectronics.com
Fax: 903.765.7664



Larson Electronics LLC
9419 E US HWY 175, Kemp, TX 75143
Phone: 800.369.6671

www.LarsonElectronics.com
Email: sales@LarsonElectronics.com
Fax: 903.765.7664

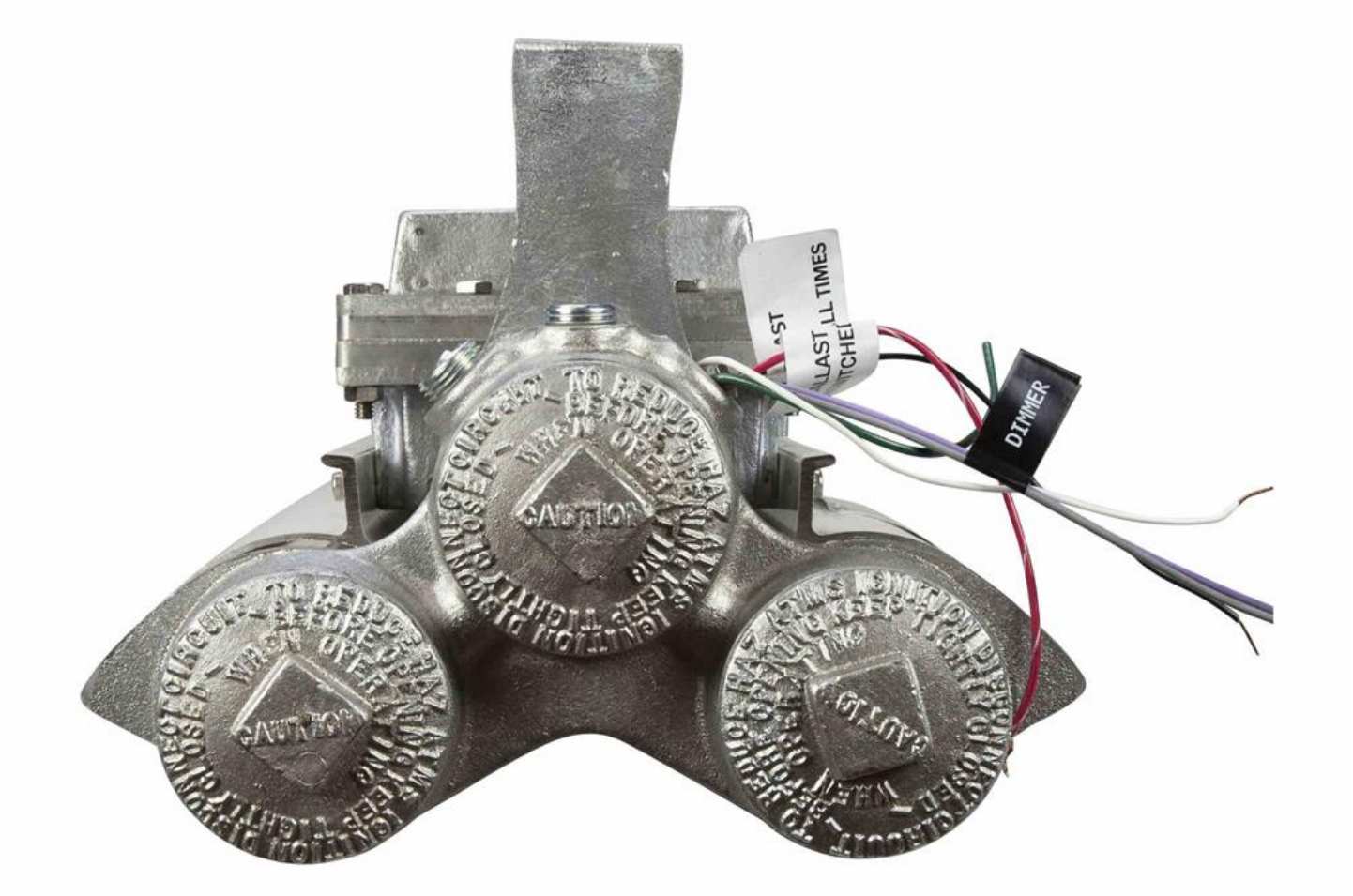

Larson Electronics LLC
9419 E US HWY 175, Kemp, TX 75143
Phone: 800.369.6671

www.LarsonElectronics.com
Email: sales@LarsonElectronics.com
Fax: 903.765.7664



SAFETY DATA SHEET

HCS-2012 APPENDIX D TO §1910.1200

Version 1 **Issue Date** 21-Jan-2015
Product Name Nickel Cadmium Battery **Revision date** 21-Jan-2015

1. IDENTIFICATION OF THE SUBSTANCE/MIXTURE AND OF THE COMPANY/UNDERTAKING

Product identifier

Product Name	Nickel Cadmium Battery
Chemical Name	Nickel Cadmium Battery

Other means of identification

Recommended use of the chemical and restrictions on use

Recommended Use	Used in electric tools
Uses advised against	No information available

Details of the supplier of the safety data sheet

Supplier	Jiangsu Highstar Battery Manufacturing Co.,Ltd.
Address	No.306 Heping Road(s), Qidong City, Jiangsu, China
Postal Code	226200
Phone	0086-513-80795666
FAX	0086-513-83312306
E-mail	chenj@highstar.net.cn

Emergency telephone number

0086-513-80795666

2. HAZARDS IDENTIFICATION

GHS Classification

Not a dangerous substance or mixture according to the Globally Harmonized System (GHS)

Label elements

Symbols/Pictograms	None
Signal word	None
Hazard Statements	None
Precautionary Statements	
Prevention	None
Response	None
Storage	None
Disposal	None

Hazards not otherwise classified (HNOC)

No information available

Unknown acute toxicity

.?% of the mixture consists of ingredient(s) of unknown toxicity

3. COMPOSITION/INFORMATION ON INGREDIENTS

Chemical nature Mixture

Chemical Name	CAS No	Weight-%
Nickel	7440-02-0	10 - 25
Cadmium and compounds (as Cd)	7440-43-9	10 - 25
Cadmium hydroxide (Cd(OH)2)	21041-95-2	12 - 23
Nickel hydroxide	12054-48-7	6 - 14

CENTRE TESTING INTERNATIONAL CORPORATION
Build C,Hongwei Industrial Zone,Baoan 70 District,Shenzhen China
www.cti-cert.com E-mail:info@cti-cert.com
Hotline 400-6788-333

Iron	7439-89-6	10 - 13

4. FIRST AID MEASURES

Description of first aid measures

General advice	Remove contaminated clothing and shoes. If symptoms persist, call a physician.
Inhalation	Not an expected route of exposure. IF INHALED: Remove victim to fresh air and keep at rest in a position comfortable for breathing.
Skin Contact	Wash hands thoroughly after handling. .
Eye contact	Not an expected route of exposure. .
Ingestion	Rinse mouth Get medical attention Never give anything by mouth to an unconscious person

Most important symptoms and effects, both acute and delayed

No information available.

Indication of any immediate medical attention and special treatment needed

Treat symptomatically.

5. FIRE-FIGHTING MEASURES

Extinguishing media

Suitable extinguishing media	Use extinguishing measures that are appropriate to local circumstances and the surrounding environment.
Unsuitable extinguishing media	No information available.

Specific hazards arising from the chemical

Thermal decomposition can lead to release of irritating and toxic gases and vapors

Protective equipment and precautions for firefighters

As in any fire, wear self-contained breathing apparatus pressure-demand, MSHA/NIOSH (approved or equivalent) and full protective gear.

6. ACCIDENTAL RELEASE MEASURES

Personal precautions, protective equipment and emergency procedures

Evacuate personnel to safe areas
Ensure adequate ventilation, especially in confined areas
Remove all sources of ignition
Use personal protection recommended in Section 8

Methods and material for containment and cleaning up

Prevent further leakage or spillage if safe to do so
Pick up and transfer to properly labeled containers

Avoid release to the environment

7. HANDLING AND STORAGE

Precautions for safe handling

Handle in accordance with good industrial hygiene and safety practice
Ensure adequate ventilation, especially in confined areas
Avoid creating dust
Avoid contact with eyes
Wash thoroughly after handling
Use personal protection recommended in Section 8

CENTRE TESTING INTERNATIONAL CORPORATION
Build C,Hongwei Industrial Zone,Baoan 70 District,Shenzhen China
www.cti-cert.com E-mail:info@cti-cert.com
Hotline 400-6788-333

Conditions for safe storage, including any incompatibilities

Keep containers tightly closed in a dry, cool and well-ventilated place
Keep away from heat

8. EXPOSURE CONTROLS/PERSONAL PROTECTION

Control parameters

Chemical Name	ACGIH TLV	OSHA PEL	NIOSH IDLH	Denmark	European Union
Nickel (CAS #: 7440-02-0)	TWA: 1.5 mg/m^3 inhalable fraction	TWA: 1 mg/m^3 (vacated) TWA: 1 mg/m^3	IDLH: 10 mg/m^3 IDLH: 10 mg/m^3 Ni TWA: 0.015 mg/m^3 TWA: 0.015 mg/m^3 except Nickel carbonyl Ni	TWA: 0.05 mg/m^3	-
Cadmium and compounds (as Cd) (CAS #: 7440-43-9)	TWA: 0.01 mg/m^3 TWA: 0.002 mg/m^3 respirable fraction TWA: 0.01 mg/m^3 Cd TWA: 0.002 mg/m^3 Cd respirable fraction	TWA: 0.1 mg/m^3 fume applies to any operations or sectors for which the Cadmium standard is stayed or otherwise not in effect TWA: 0.2 mg/m^3 dust applies to any operations or sectors for which the Cadmium standard is stayed or otherwise not in effect TWA: 5 µg/m^3 (vacated) STEL: 0.3 ppm fume Ceiling: 0.3 mg/m^3 fume applies to any operations or sectors for which the Cadmium standard is stayed or otherwise not in effect Ceiling: 0.6 mg/m^3 dust applies to any operations or sectors for which the Cadmium standard is stayed or otherwise not in effect	IDLH: 9 mg/m^3 dust IDLH: 9 mg/m^3 Cd dust and fume	TWA: 0.005 mg/m^3	-
Cadmium hydroxide (Cd(OH)2) (CAS #: 21041-95-2)	TWA: 0.01 mg/m^3 Cd TWA: 0.002 mg/m^3 Cd respirable fraction	-	-	TWA: 0.005 mg/m^3	-
Nickel hydroxide (CAS #: 12054-48-7)	TWA: 0.2 mg/m^3 Ni inhalable fraction	TWA: 1 mg/m^3 Ni (vacated) TWA: 1 mg/m^3 Ni	IDLH: 10 mg/m^3 Ni TWA: 0.015 mg/m^3 except Nickel carbonyl Ni	TWA: 0.05 mg/m^3	-

Chemical Name	Latvia	France	Finland	Germany	Italy
Nickel (CAS #: 7440-02-0)	TWA: 0.05 mg/m^3	TWA: 1 mg/m^3	TWA: 1 mg/m^3 TWA: 0.1 mg/m^3	Skin	-
Cadmium and compounds (as Cd) (CAS #: 7440-43-9)	TWA: 0.01 mg/m^3 STEL: 0.05 mg/m^3	TWA: 0.05 mg/m^3	TWA: 0.02 mg/m^3 Skin	Skin	-
Nickel hydroxide (CAS #: 12054-48-7)	TWA: 0.05 mg/m^3	TWA: 1 mg/m^3	TWA: 0.1 mg/m^3	Skin	-

Chemical Name	Poland	Portugal	Spain	Switzerland	Netherlands
Nickel (CAS #: 7440-02-0)	TWA: 0.25 mg/m^3	TWA: 1.5 mg/m^3	TWA: 1 mg/m^3	TWA: 0.5 mg/m^3	-
Cadmium and compounds (as Cd) (CAS #: 7440-43-9)	TWA: 0.01 mg/m^3 TWA: 0.002 mg/m^3	TWA: 0.01 mg/m^3 TWA: 0.002 mg/m^3	TWA: 0.01 mg/m^3 TWA: 0.002 mg/m^3	Skin TWA: 0.015 mg/m^3	-
Nickel hydroxide (CAS #: 12054-48-7)	TWA: 0.25 mg/m^3	TWA: 0.2 mg/m^3	TWA: 0.2 mg/m^3	TWA: 0.05 mg/m^3	-

Chemical Name	Norway	United Kingdom	Australia	Austria	Belgium
Nickel (CAS #: 7440-02-0)	TWA: 0.05 mg/m^3 STEL: 0.15 mg/m^3	STEL: 1.5 mg/m^3 TWA: 0.5 mg/m^3	1 mg/m^3	-	-

CENTRE TESTING INTERNATIONAL CORPORATION Build C,Hongwei Industrial Zone,Baoan 70 District,Shenzhen China www.cti-cert.com E-mail:info@cti-cert.com Hotline 400-6788-333

Cadmium and compounds (as Cd) (CAS #: 7440-43-9)	TWA: 0.05 mg/m^3 STEL: 0.15 mg/m^3	STEL: 0.075 mg/m^3 TWA: 0.025 mg/m^3	0.01 mg/m^3	-	-
Cadmium hydroxide (Cd(OH)2) (CAS #: 21041-95-2)	-	-	0.01 mg/m^3	-	-
Nickel hydroxide (CAS #: 12054-48-7)	TWA: 0.05 mg/m^3 STEL: 0.15 mg/m^3	TWA: 0.5 mg/m^3	-	-	-

Appropriate engineering controls

Showers
Eyewash stations
Ventilation systems

Individual protection measures, such as personal protective equipment

Respiratory protection	If exposure limits are exceeded or irritation is experienced, NIOSH/MSHA approved respiratory protection should be worn. Positive-pressure supplied air respirators may be required for high airborne contaminant concentrations. Respiratory protection must be provided in accordance with current local regulations.
Hand Protection	Wear protective gloves.
Eye/face protection	No special technical protective measures are necessary.
Skin and body protection	Wear suitable protective clothing.

9. PHYSICAL AND CHEMICAL PROPERTIES

Information on basic physical and chemical properties

Appearance	Solid
Color	No information available
Odor	Odorless
Odor Threshold	Not determined
pH	Not determined
Melting point/freezing point	Not determined
Boiling point / boiling range	Not determined
Flash point	Not applicable
Evaporation rate	Not determined
Flammability (solid, gas)	Not determined
Flammability Limit in Air	Not determined
Vapor Pressure	Not applicable
Vapor density	Not determined
Density	Not determined
Relative density	Not determined
Bulk density	Not determined
Specific gravity	Not determined
Water solubility	Not determined
Partition coefficient (LogPow)	Not determined
Autoignition temperature	Not determined
Decomposition temperature	Not determined
Kinematic viscosity	Not determined
Dynamic viscosity	Not determined
Explosive properties	Not an explosive
Oxidizing properties	Not determined

Other information

No information available

10. STABILITY AND REACTIVITY

Reactivity

Stable under recommended storage and handling conditions (see SECTION 7, handling and storage).

CENTRE TESTING INTERNATIONAL CORPORATION
Build C,Hongwei Industrial Zone,Baoan 70 District,Shenzhen China
www.cti-cert.com E-mail:info@cti-cert.com
Hotline 400-6788-333

Chemical stability

Stable under normal conditions

Possibility of Hazardous Reactions

None under normal processing

Conditions to avoid

Strong heating. Incompatible materials

Incompatible materials

Strong acids Strong bases Strong oxidizing agents

Hazardous Decomposition Products

None known based on information supplied

11. TOXICOLOGICAL INFORMATION

Information on likely routes of exposure

Inhalation	Inhalation of vapors in high concentration may cause irritation of respiratory system
Eye contact	Contact with eyes may cause irritation
Skin Contact	Substance may cause slight skin irritation
	Ingestion may cause irritation to mucous membranes

Information on toxicological effects

Acute toxicity

Chemical Name	Oral LD50	Dermal LD50	Inhalation LC50
Nickel (CAS #: 7440-02-0)	> 9000 mg/kg (Rat)	-	-
Cadmium and compounds (as Cd) (CAS #: 7440-43-9)	= 2330 mg/kg (Rat)	-	= 25 mg/m^3 (Rat) 30 min
Nickel hydroxide (CAS #: 12054-48-7)	-	-	= 1200 mg/m^3 (Rat) 4 h
Iron (CAS #: 7439-89-6)	98.6 g/kg bw (rat)	-	-

Skin corrosion/irritation

Non-irritating to the skin

Serious eye damage/eye irritation

No eye irritation

Sensitization

No information available

Germ cell mutagenicity

No information available

Carcinogenicity

This product does not contain any carcinogens or potential carcinogens as listed by OSHA, IARC or NTP

Chemical Name	ACGIH	IARC	NTP	OSHA
Nickel (CAS #: 7440-02-0)	-	Group 2B	Known Reasonably Anticipated	X
Cadmium and compounds (as Cd) (CAS #: 7440-43-9)	A2	Group 1	Known	X
Cadmium hydroxide (Cd(OH)2) (CAS #: 21041-95-2)	A2	-	-	-
Nickel hydroxide (CAS #: 12054-48-7)	A1	Group 1	Known	X

CENTRE TESTING INTERNATIONAL CORPORATION
Build C,Hongwei Industrial Zone,Baoan 70 District,Shenzhen China
www.cti-cert.com E-mail:info@cti-cert.com
Hotline 400-6788-333

Reproductive toxicity
No information available

STOT - single exposure
No information available

STOT - repeated exposure
No information available

Aspiration hazard
No information available

12. ECOLOGICAL INFORMATION

Ecotoxicity

Chemical Name	Algae/aquatic plants EC50	Fish LC50	Crustacea EC50
Nickel (CAS #: 7440-02-0)	0.18 mg/L/72h Pseudokirchneriella subcapitata 0.174 - 0.311 mg/L/96h Pseudokirchneriella subcapitata static	100 mg/L/96h Brachydanio rerio 1.3 mg/L/96h Cyprinus carpio semi-static 10.4 mg/L/96h Cyprinus carpio static	100 mg/L/48h Daphnia magna 1 mg/L/48h Daphnia magna Static
Cadmium and compounds (as Cd) (CAS #: 7440-43-9)	-	0.003: 96 h Oncorhynchus mykiss mg/L LC50 flow-through 0.006: 96 h Oncorhynchus mykiss mg/L LC50 static 0.002: 96 h Cyprinus carpio mg/L LC50 4.26: 96 h Cyprinus carpio mg/L LC50 semi-static 0.24: 96 h Cyprinus carpio mg/L LC50 static 21.1: 96 h Lepomis macrochirus mg/L LC50 flow-through 0.016: 96 h Oryzias latipes mg/L LC50 0.0004 - 0.003: 96 h Pimephales promelas mg/L LC50	0.0244: 48 h Daphnia magna mg/L EC50 Static
Iron (CAS #: 7439-89-6)	-	-	> 100 mg/L/48h (Daphnia magna)

Persistence and degradability
No information available

Bioaccumulative potential
No information available

Mobility in soil
No information available

Other adverse effects
No information available

13. DISPOSAL CONSIDERATIONS

Waste treatment methods

Disposal of wastes: Disposal should be in accordance with applicable regional, national and local laws and regulations

Contaminated packaging: Dispose of in accordance with federal, state and local regulations

Chemical Name	RCRA	RCRA - Basis for Listing	RCRA - D Series Wastes	RCRA - U Series Wastes

CENTRE TESTING INTERNATIONAL CORPORATION Build C,Hongwei Industrial Zone,Baoan 70 District,Shenzhen China www.cti-cert.com E-mail:info@cti-cert.com Hotline 400-6788-333

Nickel 7440-02-0	-	Included in waste streams: F006, F039	-	-
Cadmium and compounds (as Cd) 7440-43-9	-	Included in waste streams: F006, F039, K061, K069, K100	1.0 mg/L regulatory level	-

Chemical Name	California Hazardous Waste Status
Nickel 7440-02-0	Toxic powder Ignitable powder

14. TRANSPORT INFORMATION

It is considered as non-dangerous good by the ICAO, IATA, IMDG and TDG.

According to IATA DGR 56th Edition for transportation and International Maritime Dangerous Goods (IMDG Code 36th) and the Recommendation on the Transportation of Dangerous Goods-Model Regulation (18th)
The products are not subjects/subject to dangerous.

DOT / IMDG / IATA

UN/ID No. Not regulated
Proper shipping name Not regulated
Hazard Class Not regulated
Packing Group Not regulated
Special precautions No information available
Marine pollutant Not applicable

15. REGULATORY INFORMATION

International Inventories

Component	AICS	DSL/NDSL	EINECS/ELINCS	ENCS	IECSC	KECL	PICCS	TSCA
Nickel 7440-02-0 (10 - 30)	X	X	X	-	X	X	X	X
Cadmium and compounds (as Cd) 7440-43-9 (10 - 30)	X	X	X	-	X	X	X	X
Cadmium hydroxide (Cd(OH)2) 21041-95-2 (10 - 30)	X	X	-	-	X	-	-	-
Nickel hydroxide 12054-48-7 (10 - 30)	X	X	X	X	X	X	X	X
Iron 7439-89-6 (10 - 30)	X	X	X	-	X	X	X	X

"-" Not Listed
"X" Listed

US Federal Regulations

SARA 313

Section 313 of Title III of the Superfund Amendments and Reauthorization Act of 1986 (SARA). This product contains a chemical or chemicals which are subject to the reporting requirements of the Act and Title 40 of the Code of Federal Regulations, Part 372

Chemical Name	SARA 313 - Threshold Values %
Nickel - 7440-02-0	0.1
Cadmium and compounds (as Cd) - 7440-43-9	0.1
Nickel hydroxide - 12054-48-7	0.1

CENTRE TESTING INTERNATIONAL CORPORATION
Build C,Hongwei Industrial Zone,Baoan 70 District,Shenzhen China
www.cti-cert.com E-mail:info@cti-cert.com
Hotline 400-6788-333

SARA 311/312 Hazard Categories

Does not apply

CWA (Clean Water Act)

This product contains the following substances which are regulated pollutants pursuant to the Clean Water Act (40 CFR 122.21 and 40 CFR 122.42)

Chemical Name	CWA - Reportable Quantities	CWA - Toxic Pollutants	CWA - Priority Pollutants	CWA - Hazardous Substances
Nickel 7440-02-0	-	X	X	-
Cadmium and compounds (as Cd) 7440-43-9	-	X	X	-
Cadmium hydroxide (Cd(OH)2) 21041-95-2	-	X	-	-
Nickel hydroxide 12054-48-7	-	X	-	X

CERCLA

This material, as supplied, contains one or more substances regulated as a hazardous substance under the Comprehensive Environmental Response Compensation and Liability Act (CERCLA) (40 CFR 302)

Chemical Name	Hazardous Substances RQs	CERCLA/SARA RQ	Reportable Quantity (RQ)
Nickel 7440-02-0	100 lb	-	RQ 100 lb final RQ RQ 45.4 kg final RQ
Cadmium and compounds (as Cd) 7440-43-9	10 lb	-	RQ 10 lb final RQ RQ 4.54 kg final RQ
Nickel hydroxide 12054-48-7	10 lb	-	RQ 10 lb final RQ RQ 4.54 kg final RQ

US State Regulations

California Proposition 65

This product contains the following Proposition 65 chemicals

Chemical Name	California Proposition 65
Nickel - 7440-02-0	Carcinogen
Cadmium and compounds (as Cd) - 7440-43-9	Carcinogen Developmental Male Reproductive
Cadmium hydroxide (Cd(OH)2) - 21041-95-2	Carcinogen
Nickel hydroxide - 12054-48-7	Carcinogen

U.S. State Right-to-Know Regulations

This product may contain substances regulated by state right-to-know regulations

Chemical Name	New Jersey	Massachusetts	Pennsylvania
Nickel 7440-02-0	X	X	X
Cadmium and compounds (as Cd) 7440-43-9	X	X	X
Nickel hydroxide 12054-48-7	X	X	X

16. OTHER INFORMATION

Revision Note

Issue Date	21-Jan-2015
Revision date	21-Jan-2015
Revision Note	Not applicable

Key or legend to abbreviations and acronyms used in the safety data sheet

TWA - TWA (time-weighted average)
STEL - STEL (Short Term Exposure Limit)
Ceiling - Maximum limit value
TSCA - United States Toxic Substances Control Act Section 8(b) Inventory

CENTRE TESTING INTERNATIONAL CORPORATION
Build C,Hongwei Industrial Zone,Baoan 70 District,Shenzhen China
www.cti-cert.com E-mail:info@cti-cert.com
Hotline 400-6788-333

DSL/NDSL - Canadian Domestic Substances List/Non-Domestic Substances List
EINECS/ELINCS - European Inventory of Existing Chemical Substances/European List of Notified Chemical Substances
ENCS - Japan Existing and New Chemical Substances
IECSC - China Inventory of Existing Chemical Substances
KECL - Korean Existing and Evaluated Chemical Substances
PICCS - Philippines Inventory of Chemicals and Chemical Substances
AICS - Australian Inventory of Chemical Substances

Disclaimer

The information provided in this Material Safety Data Sheet is correct to the best of our knowledge, information and belief at the date of its publication. The information given is designed only as a guidance for safe handling, use, processing, storage, transportation, disposal and release and is not to be considered a warranty or quality specification. The information relates only to the specific material designated and may not be valid for such material used in combination with any other materials or in any process, unless specified in the text.

-------- End of Safety Data Sheet --------

CENTRE TESTING INTERNATIONAL CORPORATION
Build C,Hongwei Industrial Zone,Baoan 70 District,Shenzhen China
www.cti-cert.com E-mail:info@cti-cert.com
Hotline 400-6788-333

Larson Electronics LLC
9419 E US HWY 175, Kemp, TX 75143
Phone: 800.369.6671

www.LarsonElectronics.com
Email: sales@LarsonElectronics.com
Fax: 903.765.7664

Frequently Asked Questions (FAQ)

There are no Faqs