Larson Electronics LLC
9419 E US HWY 175, Kemp, TX 75143
Phone: 800.369.6671

www.LarsonElectronics.com
Email: sales@LarsonElectronics.com
Fax: 903.498.3364

LZRWL-CRN-RED-200MW

200mW Red Crane Warning Laser - Red Pedestrian Safety Laser - Projects Red Line on Floor - IP54

Product ID: 147441

Larson Electronics LLC manufactures a wide variety of products, including custom built to spec designs. The pictures displayed for this unit are a general representation of form factor for the product line and may not accurately represent this exact configuration in every detail due to custom builds and changes between similar products in our standard catalog. The specifics for this configuration are listed in the specification table and supporting documentation (CAD files, Dimensional Drawing, Name Plate Diagram, Wiring Diagram, etc.). This means that specific details (receptacles, plugs, wires, connections, mounting brackets, external finishes, etc.) may not be accurately represented in images vs specifications. Please review specifications and do not order based solely on images.

LZRWL-CRN-RED-200MW Crane Warning Laser

Light Type: Red Laser
Dimensions: 9"H x 7.6"D x 7.4"Diameter
Weight: 5 lbs
Voltage: 12V DC
Total Milliwatts (mW): 200
LED Lamp Life Expectancy: 10,000 hours
Laser Configuration: 120° Beam, 60° Beam or 30° Beam
Ambient Operating Temperature: -40°C to +50°C
Housing Material: Aluminum
Lens Material: Acrylic
Mounting: Surface Mount Bracket
Wiring Hub: Pigtail/Flying Leads

3 year warranty replacement on this laser warning light. After 30 days, the customer ships the failed laser warning light to Larson Electronics at their expense. If the failure is a manufacturer defect, we will ship a new replacement to the customer. If failure occurs within 30 days of receipt, Larson Electronics will provide a return label via email to the customer. When the failed laser is returned, Larson Electronics will ship a new replacement.

Quick Summary

Increases Safety Around Cranes
Projects High-Vis 50` Red Line on Floor
Easy to Mount
Compact and Lightweight
10,000+ Hour Service Life

Special Orders- Requirements

Contact us for special requirements

Toll Free: 1-800-369-6671

Intl: 1-903-270-1187

E-mail: sales@larsonelectronics.com

Buy American Compliant

The LZRWL-CRN-RED-200MW from Larson Electronics is a Crane Warning Laser that is ideal for overhead crane safety and to warn people in the area to not walk under an operating crane. This compact 200mW laser produces a high-visibility line of red light that projects on the ground and

has a low voltage and amp draw and a 10,000 hour service life providing operators with a versatile and powerful laser safety lighting system.
The LZRWL-CRN-RED-200MW crane warning laser light from Larson Electronics is a powerful laser pointer equipped with a special optic in front that allows it to project a line of light instead of just a single dot. It is mounted on the arm of a crane and projects a 120° angle line, 60° angle line or 30° angle line onto the floor of the work location or area where the crane is operating. Make your beam angle selection when ordering below. This particular unit is compact at only 7.4 inches in diameter by 9 inches tall by 7.6 inches deep, which makes it ideal for applications where electrical power and mounting space is at a premium.
The LZRWL-CRN-RED-200MW crane warning lasers are weatherproof, sealed against intrusion by dust and dirt and very ruggedly constructed to withstand the most demanding environments, conditions and applications. A small profile, low power requirements, high durability and versatile mounting makes these crane warning lasers ideal for industrial manufacturing applications and anywhere requiring overhead crane safety lights. Similarly to forklift safety lights, this product will add an additional level of safety to the industrial environment by warning pedestrians of a crane`s movement when sound warnings may not be enough.
Voltage: The LZRWL-CRN-RED-200MW operates on 12V DC voltages for output power.
Durability: This crane warning laser is built to be durable and long lasting. The laser itself is rated for a 10,000 hour service life. The housing is industrial grade and rugged enough for heavy crane use and providing a safety indicator to people walking near the crane in many different conditions. The LZRWL-CRN-RED-200MW is rated as IP54 weatherproof and can be used in outdoor applications.
Laser Beam Lengths: The LZRWL-CRN-RED-100MW is capable of projecting a red line of various lengths on the floor or ground beneath the crane. The length of the projected red line increases along with mounting height. Please reference the table below to determine the red line length for the desired mounting height.

Mounting Height	Beam Angle		
	30°	60°	120°
10 Feet			
25 Feet			
50 Feet			
80 Feet			
120 Feet			

Mounting: These crane warning lasers feature a small profile and lightweight, making them ideal for use in locations where traditional lights cannot fit or would block other mounted equipment. The LZRWL-CRN-RED-200MW features an adjustable U-bracket with a predrilled mounting thru-hole. The thru-hole bolt mounting design allows operators to rotate the bracket after mounting to accomodate any required mounting angle. Operators simply loosen the mounting bolt, adjust the angle of the mounting bracket to the ideal position and then retighten the bolt. The U-bracket on the LZRWL-CRN-RED-200MW also allows the laser to be oriented 180° vertically after mounting. This innovative mounting design allows this crane warning laser light to be an extremely versatile addition to workplace safety.

Larson Electronics LLC
9419 E US HWY 175, Kemp, TX 75143
Phone: 800.369.6671

www.LarsonElectronics.com
Email: sales@LarsonElectronics.com
Fax: 903.498.3364

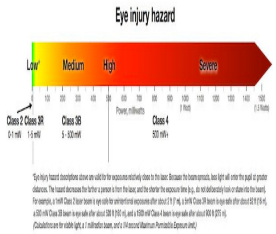

Click Photo to Enlarge

At Larson Electronics, we do more than meet your lighting needs. We also provide replacement, retrofit, and upgrade parts as well as industrial grade power accessories. Our craftsmen can custom build any lighting system and/or accessories to fit the unique demands of your operation. A commitment to honesty, quality, and dependability has made Larson Electronics a leader in the lighting and electronics business since 1973. Contact us today at 800-369-6671 or message sales@larsonelectronics.com for more information about our custom options tailored to meet your specific industry needs.

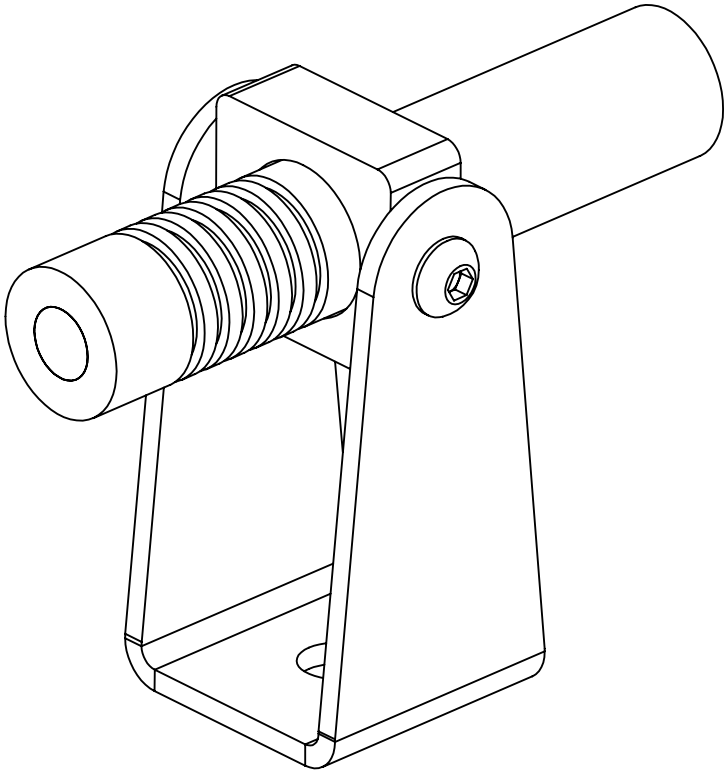

LARSON ELECTRONICS

PART NUMBER:

LZRWL-CRN-RED-200MW

SIZE		REV
A		00

SCALE: NTS		SHEET 1 OF 2

DIMENSIONS ARE IN INCHES		
DO NOT SCALE DRAWING	DATE	05/24/2017

PROPRIETARY AND CONFIDENTIAL

THE INFORMATION CONTAINED IN THIS DRAWING IS THE SOLE PROPERTY OF LARSON ELECTRONICS LLC. ANY REPRODUCTION IN PART OR AS A WHOLE WITHOUT THE WRITTEN PERMISSION OF LARSON ELECTRONICS LLC IS PROHIBITED.

5 4 3 2 1

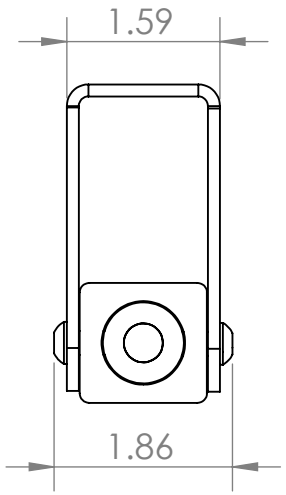

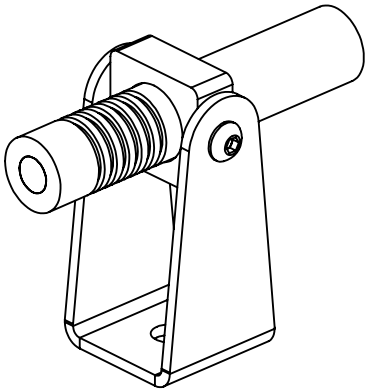

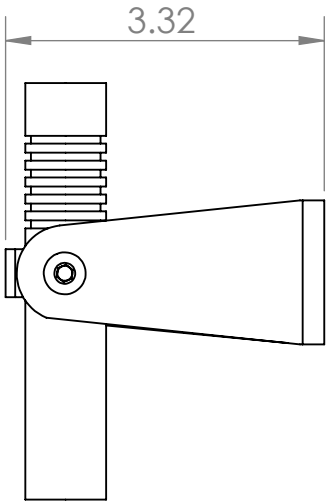

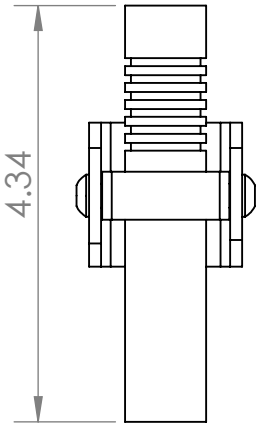

LARSON ELECTRONICS

PART NUMBER:

LZRWL-CRN-RED-200MW

SIZE		REV
A		00

DIMENSIONS ARE IN INCHES			
DO NOT SCALE DRAWING	DATE	05/24/2017	

SCALE: NTS | SHEET 2 OF 2

PROPRIETARY AND CONFIDENTIAL
THE INFORMATION CONTAINED IN THIS DRAWING IS THE SOLE PROPERTY OF LARSON ELECTRONICS LLC. ANY REPRODUCTION IN PART OR AS A WHOLE WITHOUT THE WRITTEN PERMISSION OF LARSON ELECTRONICS LLC IS PROHIBITED.

5 4 3 2 1

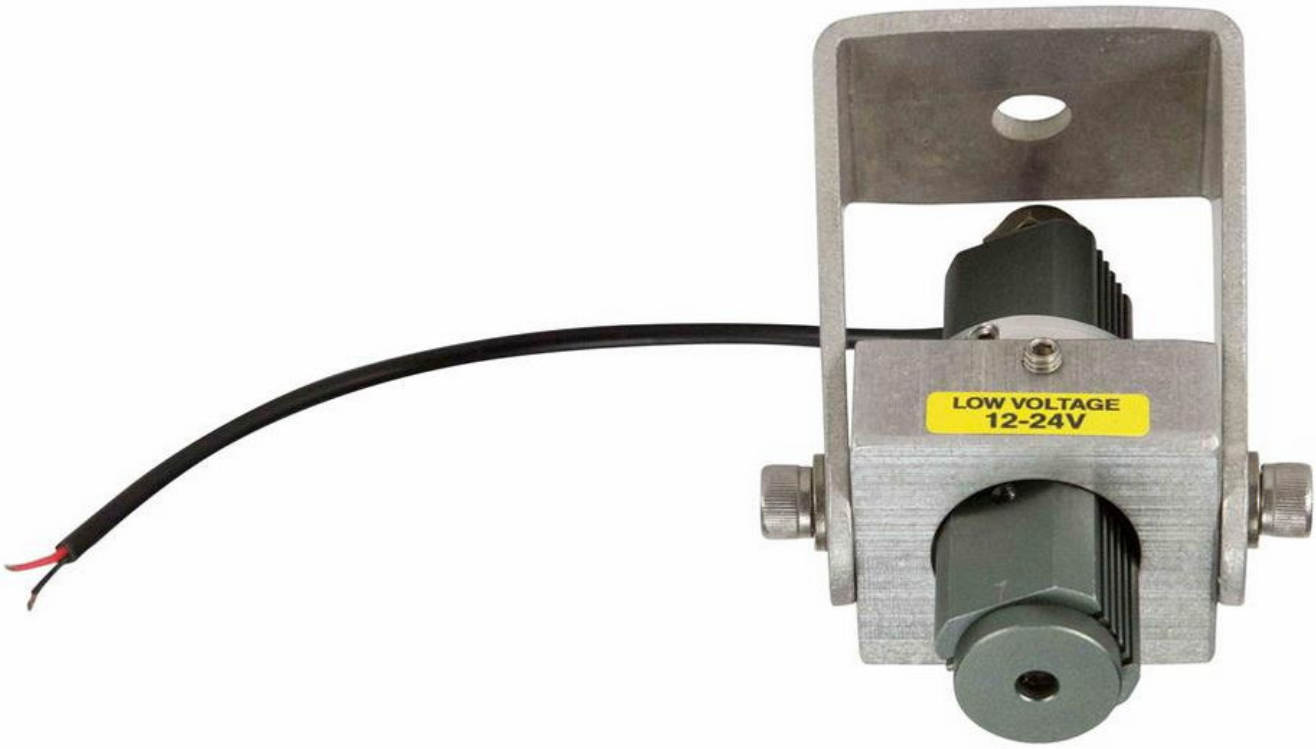
LOW VOLTAGE
12-24V

DANGER
Laser
Avoid direct
eye exposure
LOW VOLTAGE
12-24V

www.Larson

Frequently Asked Questions (FAQ)