Larson Electronics LLC
9419 E US HWY 175, Kemp, TX 75143
Phone: 800.369.6671

www.LarsonElectronics.com
Email: sales@LarsonElectronics.com
Fax: 903.498.3364

WAL-CC-48-160W-LED-25

160W LED Creeper Cart Shop Light - 19200 Lumens - Low Profile & Durable Design - 25' SOOW Cord

Product ID: 147396



Larson Electronics LLC manufactures a wide variety of products, including custom built to spec designs. The pictures displayed for this unit are a general representation of form factor for the product line and may not accurately represent this exact configuration in every detail due to custom builds and changes between similar products in our standard catalog. The specifics for this configuration are listed in the specification table and supporting documentation (CAD files, Dimensional Drawing, Name Plate Diagram, Wiring Diagram, etc.). This means that specific details (receptacles, plugs, wires, connections, mounting brackets, external finishes, etc.) may not be accurately represented in images vs specifications. Please review specifications and do not order based solely on images.

WAL-CC-48-160W-LED-25 Creeper Cart LED Shop Light

Lamp Type: LED
Dimensions: 50"L x 9"W x 6"H
Weight: 12 lbs
Voltage: Universal - 110-277V AC
Watts: 160W
Lumens: 19,200
Luminous Efficacy: 120 Lm/W
LED Light Color: 6000K
LED Life Expectancy: 50,000 hours
Power Efficiency: >90%
Power Factor: >0.95
Lighting Configuration: 160° Flood Beam
Amps: 1.40 @ 120V AC - 0.61 @ 277V AC
Ambient Operating Temp Range: -30°C to +60°C
Waterproof Rating: IP65
Cord Cap Options: 5-15 Straight, 6-15 Straight, L5-15 Twist, L6-15 Twist, UK BS1363, Intl. Schuko, Pigtail
Housing Material: Aluminum
Lens Material: Polycarbonate
Mounting: (4) Polyurethane Caster Wheels

Ratings/Approvals

IP65 Waterproof
Impact/Vibration Resistance
Shatterproof Lens
Ambient Op Temp -30°C to +60°C
Available with Choice of Cord Cap
Ideal for Automotive Work and Shop Lighting
Extremely Durable and Versatile
Vapor Proof
Outdoor Approved

Special Orders - Special Requirements

Contact us for special requirements

Toll Free: 1-800-369-6671
Intl: 1-214-616-6180
E-mail: sales@larsonelectronics.com

REV	DESCRIPTION	DATE
A	PRODUCTION RELEASE	04-18-2024

WAL-CC-48-160W-LED-25-5.15

LARSON ELECTRONICS®

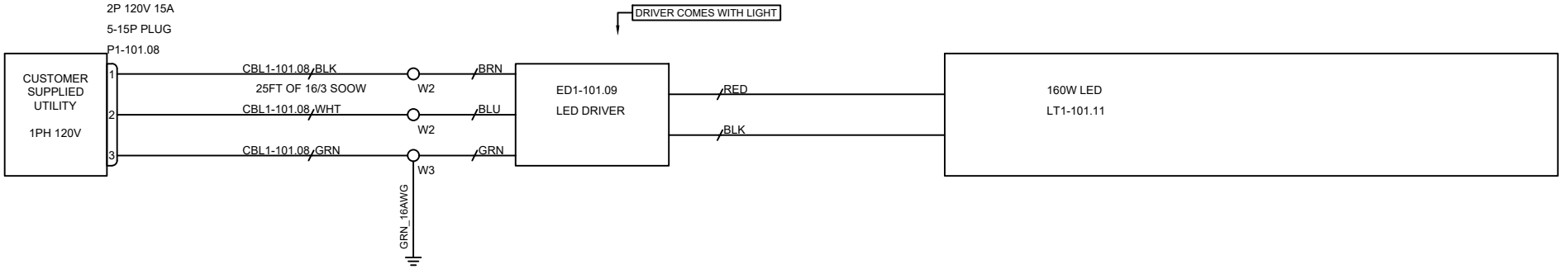

TAGS	QTY	CATALOG	DESCRIPTION
P1-101.08	1	UNV00006731	PLUG , STRAIGHT BLADE 15A, 125V NEMA 5-15
LT1-101.11	1	UNV00008015	160W 4 FT LED LINEAR LIGHT WATERPROOF
W3	1	UNV00011954	3 HOLE WAGO
W2	2	UNV00009802	2 HOLE WAGO
CBL1-101.08	1	UNV00007524	16/3 SOOW CABLE

LARSON ELECTRONICS
9419 E US HWY 175,
KEMP, TX 75143

TITLE: WAL-CC-48-160W-LED-25-5.15

DRAWN BY	DATE	REV
J.Maldonado	04-18-2024	A
CHECKED BY	SHEET #	DRAWING #
S.Desai	1 OF 1	101

Frequently Asked Questions (FAQ)