Larson Electronics LLC
9419 E US HWY 175, Kemp, TX 75143
Phone: 800.369.6671

www.LarsonElectronics.com
Email: sales@LarsonElectronics.com
Fax: 903.498.3364

WALPC-48-160W-LED-25

160W Mobile LED Light Stand w/ Wheels - 360 Rotation - Dual Wheels - IP65 Waterproof

Product ID: 147294



Larson Electronics LLC manufactures a wide variety of products, including custom built to spec designs. The pictures displayed for this unit are a general representation of form factor for the product line and may not accurately represent this exact configuration in every detail due to custom builds and changes between similar products in our standard catalog. The specifics for this configuration are listed in the specification table and supporting documentation (CAD files, Dimensional Drawing, Name Plate Diagram, Wiring Diagram, etc.). This means that specific details (receptacles, plugs, wires, connections, mounting brackets, external finishes, etc.) may not be accurately represented in images vs specifications. Please review specifications and do not order based solely on images.

WALPC-48-160W-LED-25 Mobile LED Light Stand w/ Wheels

Lamp Type: LED
Dimensions: 49.377"-L x 32.51"-W x 58.117"-H
Weight: 40 lbs
Total Watts: 160 watts
Voltage: 120-277V AC 50/60 Hz
LED Lamp Life Expectancy: 50,000+ Hours
Beam Angle: 160°
Luminous Efficiency: 160 lm/w
Total Lumens: 19,200
Color Temp: 6000K
Ambient Temp Range: -30°C to +60°C
Power Efficiency: >90%
Power Factor: >0.95
Materials: Aluminum Housing/Polycarbonate Lens
Wiring: 25` 16/3 SOOW Cord
Cord Cap Options: 5-15 Straight, 6-15 Straight, L5-15 Twist, L6-15 Twist. UK BS1363, Intl. Schuko, Pigtail
Mount: Aluminum Stand on Wheels

Ratings/Approvals

80% Lumen Retention after 50,000 Hours
Reduced Energy Consumption With Improved Output
Vapor Proof
Vibration Shock Resistant
IP65 Rated Waterproof
Outdoor Approved
360-degree Lamp Rotation

Special Orders - Special Requirements

Contact us for special requirements

Toll Free: 1-800-369-6671

Intl: 1-903-270-1187

E-mail: sales@larsonelectronics.com

REV	DESCRIPTION	DATE
A	PRODUCTION RELEASE	03/29/2022

WALPC-48-160W-LED-25-5.15

LARSON ELECTRONICS®

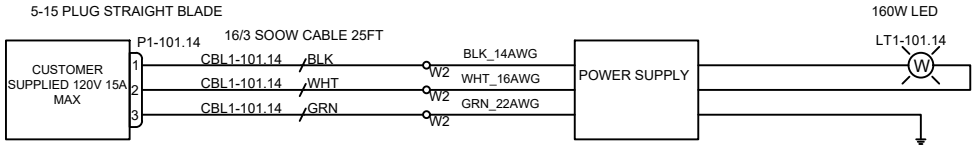

TAGS	QTY	CATALOG	DESCRIPTION
P1-101.14	1	UNV00005389	EXP PROOF 125V 15A 5-15P STRAIGHT BLADE
LT1-101.14	1	UNV00007947	160W 4F LED LINEAR 5600K W/SS HANGING CABLES
W2	3	UNV00009802	2 HOLE WAGO
CBL1-101.14	25FT	UNV00007524	16/3 SOOW CABLE

LARSON ELECTRONICS

9419 E US HWY 175,
KEMP, TX 75143

TITLE: WALPC-48-160W-LED-25-5.15

DRAWN BY	DATE	REV
A. CIBISOVS	03/29/2022	A
CHECKED BY	SHEET #	DRAWING #
K. NGUYEN	1 OF 1	101

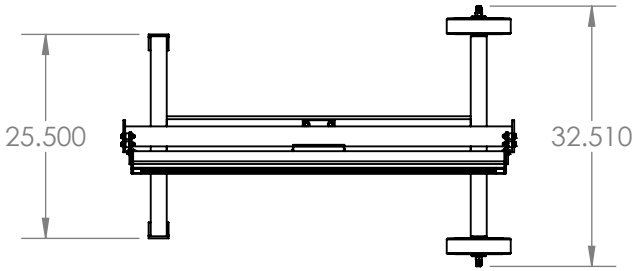

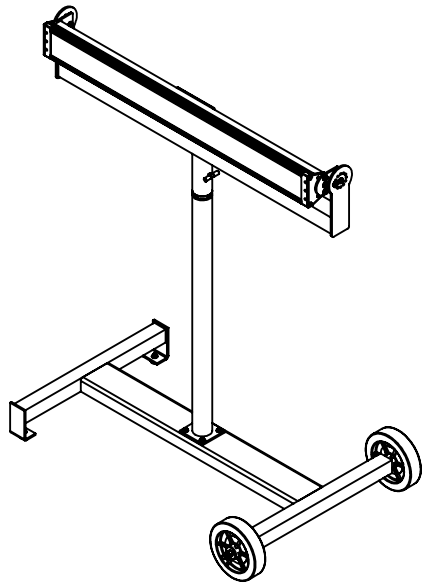

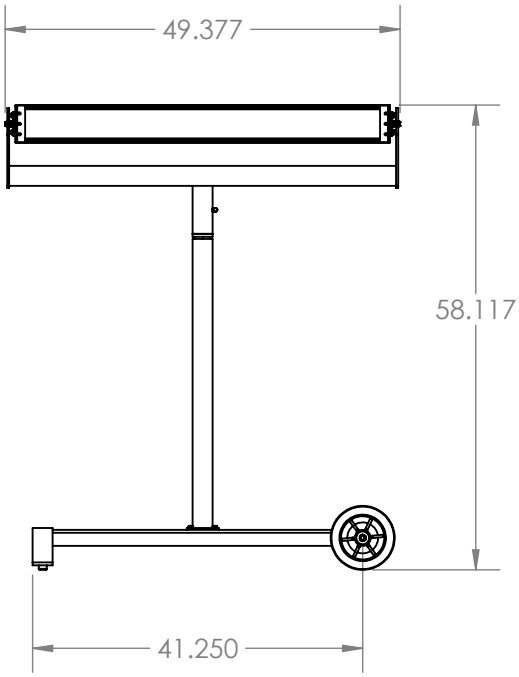

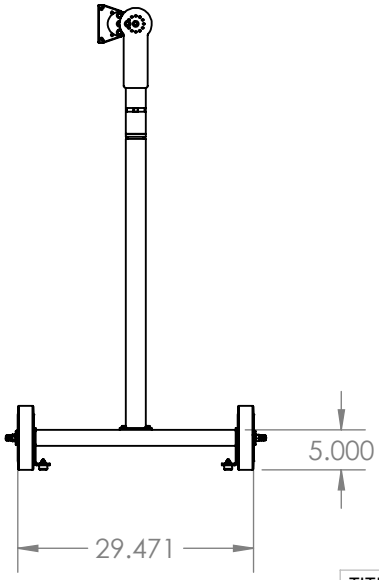

LARSON ELECTRONICS

TITLE:

WALPC-48-160W-LED-25

FINISH			
SURFACE AREA [sq. in]			NAME
DIMENSIONS ARE IN INCHES		DRAWN	CHRISTOPHER THAUER
MATERIAL		CHECKED	N/A
DO NOT SCALE DRAWING		DATE	2/2/2022

SIZE	DWG. NO.	REV
A		

SCALE: NTS | SHEET 1 OF 1

PROPRIETARY AND CONFIDENTIAL
THE INFORMATION CONTAINED IN THIS DRAWING IS THE SOLE PROPERTY OF LARSON ELECTRONICS LLC. ANY REPRODUCTION IN PART OR AS A WHOLE WITHOUT THE WRITTEN PERMISSION OF LARSON ELECTRONICS LLC IS PROHIBITED.

UNLESS OTHERWISE NOTED:

Angle	+/- .5 deg
.X	+/- .02
.XX	+/- .01
.XXX	+/- .005




LARSON ELECTRONICS
LARSONELECTRONICS.COM
877-875-2747
sales@larsonelectronics.com
WALPC-48-160W-LED-25-5.15
Serial:
5032129





Frequently Asked Questions (FAQ)