Larson Electronics LLC
9419 E US HWY 175, Kemp, TX 75143
Phone: 800.369.6671

www.LarsonElectronics.com
Email: sales@LarsonElectronics.com
Fax: 903.765.7664

HAL-CRNM-LED10W-PC

10W Chemical Resistant LED Light - C1D2 - C2D2 - Non-Metallic - Polycarbonate Lens - Corrosion Resist

Product ID: 146717



Image: HAL-CRNM-LED10W-PC

Larson Electronics LLC manufactures a wide variety of products, including custom built to spec designs. The pictures displayed for this unit are a general representation of form factor for the product line and may not accurately represent this exact configuration in every detail due to custom builds and changes between similar products in our standard catalog. The specifics for this configuration are listed in the specification table and supporting documentation (CAD files, Dimensional Drawing, Name Plate Diagram, Wiring Diagram, etc.). This means that specific details (receptacles, plugs, wires, connections, mounting brackets, external finishes, etc.) may not be accurately represented in images vs specifications. Please review specifications and do not order based solely on images.

HAL-CRNM-LED10W-PC Hazardous Location Non-Metallic LED Light

Lamp Type:A19 LED
Lamp Dimensions (Ceiling Mount): 10.84"H x 4.75"OD
Lamp Dimensions (Pendant Mount): 11.20"H x 4.53"OD
Lamp Dimensions (Wall Mount): 7.3"L x 5.19"W x 12.26"H
Weight: 3 lbs
Voltage:120-277V AC, 12VDC or 24VDC
Total Watts: 10W
Lumens: 1,050
Luminous Efficacy: 105 Lm/W
Lamp Life: 50,000+ Hours
Color Temp: 6000K, 4500K, 3000K, Red, Blue, Amber, or Green
Color Rendering Index: >80 CRI
Beam Angle: Omni-Directional
Lighting Configuration: Steady Burn
Power Efficiency: >95%
Power Factor: 0.992
Amp Draw: 0.083A @ 120V, 0.042A @ 240V, 0.036A @ 277V, 0.42A @ 24V
Ambient Operating Temp Range: -50°C to +85°C
Operating Temp Rating: T2D
Housing Material: Polycarbonate
Lens Material: Polycarbonate
Mounting: Ceiling, Pendant, or Wall
Wiring Hub: 3/4" NPT

Ratings/Approvals

Listed for United States and Canada
Class I, Division 2, Groups A, B, C, D
Class I, Zone 2, Groups IIC, IIB, IIA
Class II, Division 2, Groups F, G
IP66
NEMA 3, 4, 4X
NRTL listed to UL 844 Hazardous Locations
NRTL listed to UL 1598 Luminaries
NRTL listed to UL1598A Marine Luminaries
CSA C22.2 No. 137 Hazardous Locations
NRTL listed to UL 94-V-0 Flame Retardant
USCG Accepted
ABS Type Approved
New York City Department of Buildings Approved

Special Orders - Special Requirements

Contact us for special requirements
Toll Free: 1-800-369-6671
Intl: 1-903-270-1187
E-mail: sales@larsonelectronics.com

Made in the USA

The HAL-CRNM-LED10W-PC Class I, Division 2 and Class II, Division 2 Chemical Resistant LED Light from Larson Electronics is for use in hazardous locations and 1050 total lumens. This waterproof LED equipped light is pendant, ceiling, or wall mounted, and available in 120-277V AC, 12V DC or 24V DC voltage configurations. The HAL-CRNM-LED10W-PC features a durable and resiliant polycarbonate lens.

The powerful and durable HAL-CRNM-LED10W-PC explosion proof LED light from Larson Electronics is ideal for industrial applications, hazardous work spaces, and areas where gases and vapors may be present and a powerful and durable general purpose light solution is needed. The lamp housing is waterproof, constructed of corrosion and chemical resistant polycarbonate with a polycarbonate lens, USCG accepted, ABS Type approved, and NEMA 4X compliant and suitable for hose-down areas. This LED lamp has a 50,000 hour operational life and is available in 120-277V, 12V DC or 24V DC configurations for high or low voltage operation.

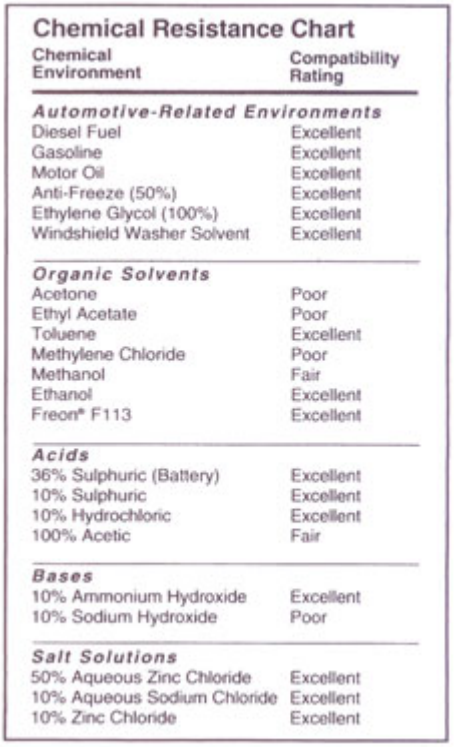

Chemical Resistance Chart

Chemical Environment	Compatibility Rating
Automotive-Related Environments	
Diesel Fuel	Excellent
Gasoline	Excellent
Motor Oil	Excellent
Anti-Freeze (50%)	Excellent
Ethylene Glycol (100%)	Excellent
Windshield Washer Solvent	Excellent
Organic Solvents	
Acetone	Poor
Ethyl Acetate	Poor
Toluene	Excellent
Methylene Chloride	Poor
Methanol	Fair
Ethanol	Excellent
Freon® F113	Excellent
Acids	
36% Sulphuric (Battery)	Excellent
10% Sulphuric	Excellent
10% Hydrochloric	Excellent
100% Acetic	Fair
Bases	
10% Ammonium Hydroxide	Excellent
10% Sodium Hydroxide	Poor
Salt Solutions	
50% Aqueous Zinc Chloride	Excellent
10% Aqueous Sodium Chloride	Excellent
10% Zinc Chloride	Excellent

Click Photo to Enlarge

Lamp: The 10-watt LED lamp used in this unit produces nearly 3 times the illumination of incandescent lamps as measured in foot candles, at less than 1/10th of the electricity usage and without the associated heat. This LED drop light runs at operating temperatures of 55°F, greatly reducing the chances of accidents or burns commonly associated with incandescent drop lights. The solid state LED bulb has no filament, making it resistant to damage from

impacts and dropping. This lamp has a high efficiency LED bulb that requires no ballast, so the operator doesn`t need to drag the ballast housing around. This can be particularly annoying when the ballast becomes entangled in the cord.

Unlike gas burning and arc type lamps that have glass bulbs, LEDs have no filaments or fragile housings to break during operation. Instead of heating a small filament or using a combination of gases to produce light, light emitting diodes (LEDs) use semi-conductive materials that illuminate when electric current applied and emitting light. With LED lights, there is no warm up time or cool down time before re-striking and provide instant illumination when powered on, adding to the reliability of LED technology. By nature, LED light sources run significantly cooler than traditional lamps, reducing the chance of accidental burns and increased temperatures due to heat emissions. This solid state design of light emitting diodes provides a more reliable, stable, durable, and energy efficient light source over traditional lighting.

At Larson Electronics, we do more than meet your lighting needs. We also provide replacement, retrofit, and upgrade parts as well as industrial grade power accessories. Our craftsmen can custom build any lighting system and/or accessories to fit the unique demands of your operation. A commitment to honesty, quality, and dependability has made Larson Electronics a leader in the lighting and electronics business since 1973. Contact us today at 800-369-6671 or message sales@larsonelectronics.com for more information about our custom options tailored to meet your specific industry needs.

REV	DESCRIPTION	DATE
A	PRODUCTION RELEASE	4/8/2024

HAL-CRNM-LED10W-PC-1227V-CLG-45K

LARSON ELECTRONICS®

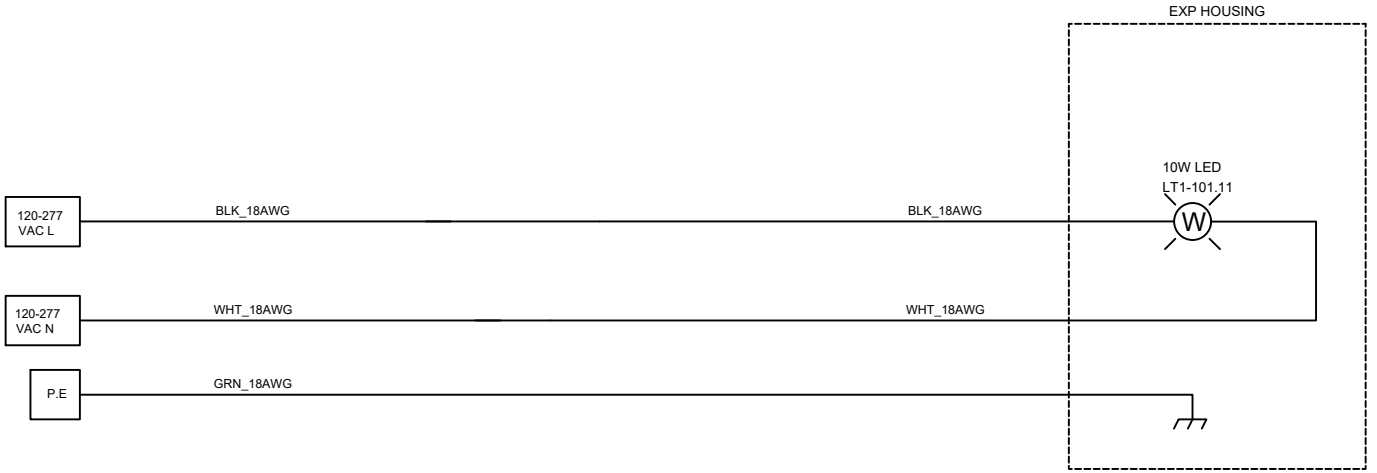

TAGS	QTY	CATALOG	DESCRIPTION
LT1-101.11	1	UNV00016384	5000K A19 LED 10W STEADY BURN

LARSON ELECTRONICS
9419 E US HWY 175,
KEMP, TX 75143

TITLE			
HAL-CRNM-LED10W-PC-1227V-CLG-45K			
DRAWN BY	DATE	REV	
A.HIRSH	4/8/2024	A	
CHECKED BY	SHEET #	DRAWING #	
	1 OF 1	101	

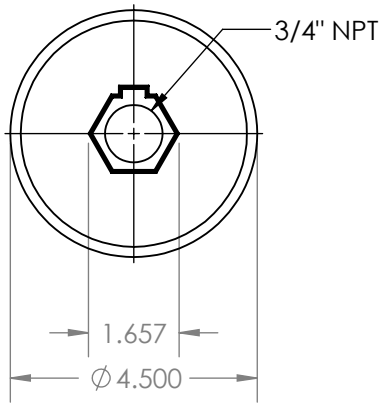

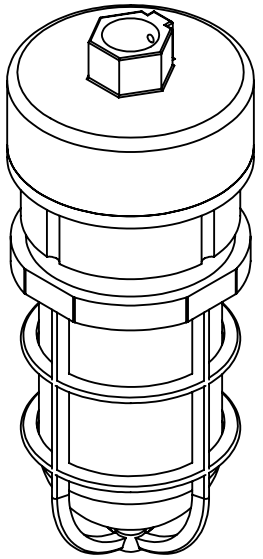

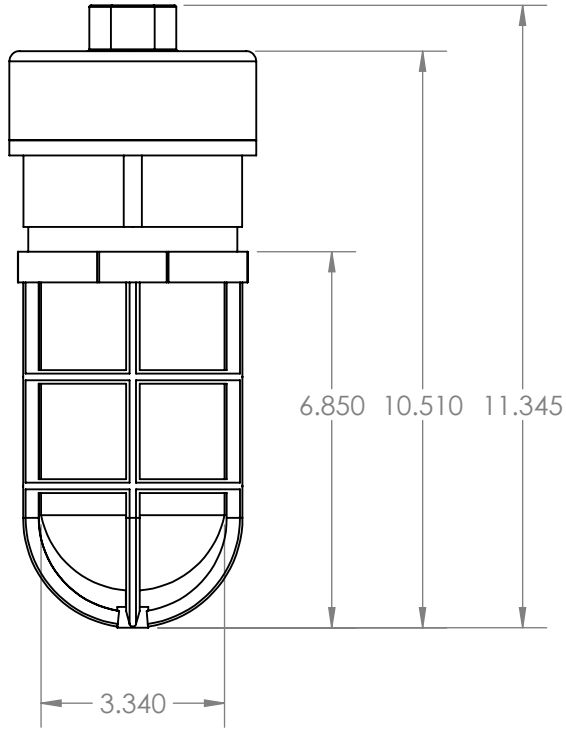

LARSON ELECTRONICS

TITLE:

HAL-CRNM-LED-PND

FINISH			
SURFACE AREA [sq. in]			NAME
DIMENSIONS ARE IN INCHES		DRAWN	CHRISTOPHER THAUER
MATERIAL		CHECKED	N/A
DO NOT SCALE DRAWING		DATE	5/13/2021

SIZE	DWG. NO.	REV
A		

SCALE: NTS | SHEET 1 OF 3

PROPRIETARY AND CONFIDENTIAL
THE INFORMATION CONTAINED IN THIS DRAWING IS THE SOLE PROPERTY OF LARSON ELECTRONICS LLC. ANY REPRODUCTION IN PART OR AS A WHOLE WITHOUT THE WRITTEN PERMISSION OF LARSON ELECTRONICS LLC IS PROHIBITED.

UNLESS OTHERWISE NOTED:

Angle	+/- .5 deg
.X	+/- .02
.XX	+/- .01
.XXX	+/- .005

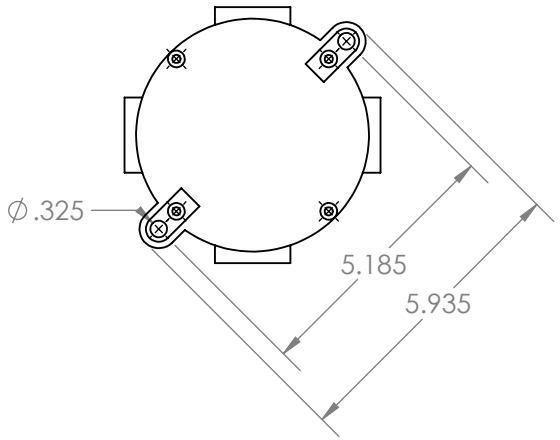

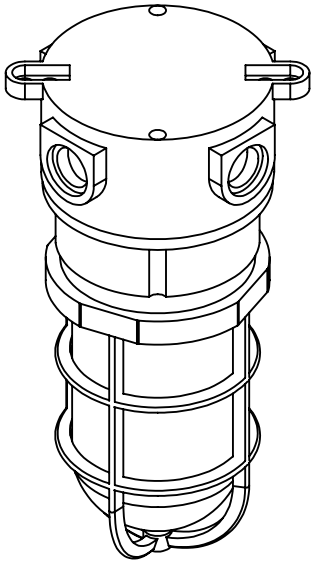

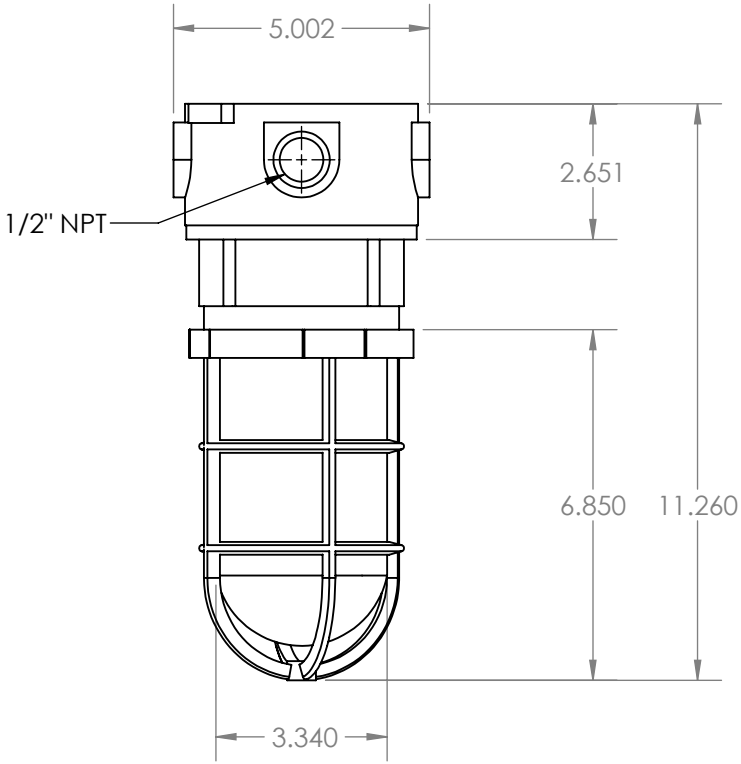

LARSON ELECTRONICS

TITLE:

HAL-CRNM-LED-CM

FINISH			
SURFACE AREA [sq. in]			NAME
DIMENSIONS ARE IN INCHES		DRAWN	CHRISTOPHER THAUER
MATERIAL		CHECKED	N/A
DO NOT SCALE DRAWING		DATE	5/13/2021

SIZE	DWG. NO.	REV
A		

SCALE: NTS | SHEET 2 OF 3

PROPRIETARY AND CONFIDENTIAL
THE INFORMATION CONTAINED IN THIS DRAWING IS THE SOLE PROPERTY OF LARSON ELECTRONICS LLC. ANY REPRODUCTION IN PART OR AS A WHOLE WITHOUT THE WRITTEN PERMISSION OF LARSON ELECTRONICS LLC IS PROHIBITED.

UNLESS OTHERWISE NOTED:

Angle	+/- .5 deg
.X	+/- .02
.XX	+/- .01
.XXX	+/- .005

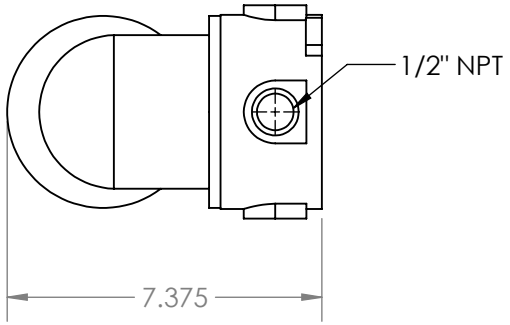

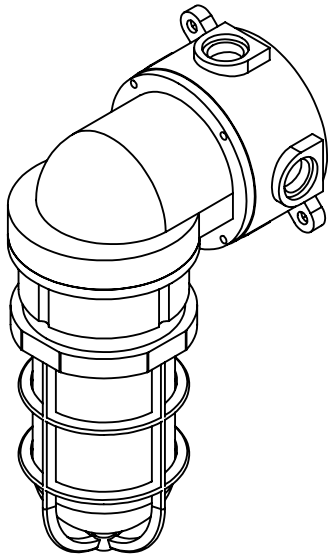

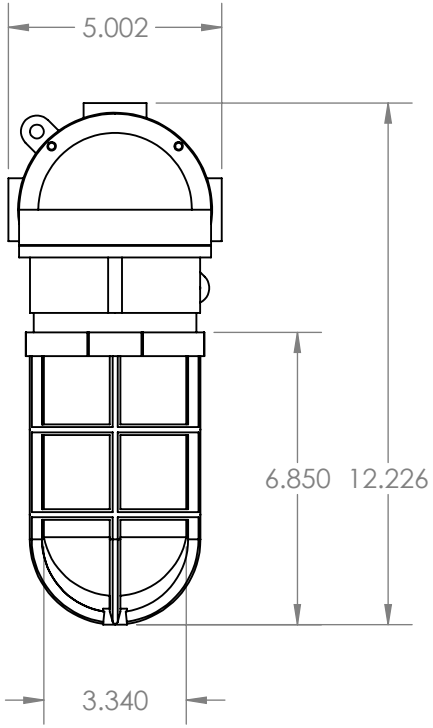

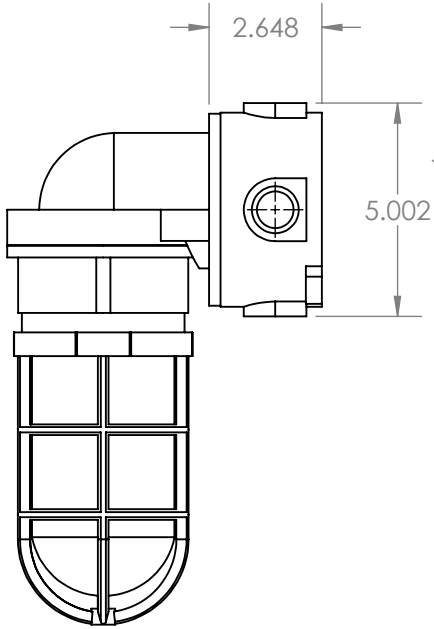

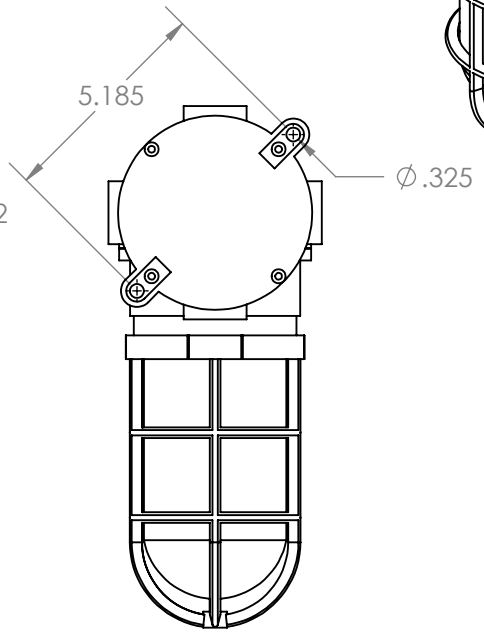

LARSON ELECTRONICS

TITLE:

HAL-CRNM-LED-WM

FINISH			
SURFACE AREA [sq. in]			NAME
DIMENSIONS ARE IN INCHES		DRAWN	CHRISTOPHER THAUER
MATERIAL		CHECKED	N/A
DO NOT SCALE DRAWING		DATE	5/13/2021

SIZE	DWG. NO.	REV
A		

SCALE: NTS | SHEET 3 OF 3

PROPRIETARY AND CONFIDENTIAL
THE INFORMATION CONTAINED IN THIS DRAWING IS THE SOLE PROPERTY OF LARSON ELECTRONICS LLC. ANY REPRODUCTION IN PART OR AS A WHOLE WITHOUT THE WRITTEN PERMISSION OF LARSON ELECTRONICS LLC IS PROHIBITED.

UNLESS OTHERWISE NOTED:

Angle	+/- .5 deg
.X	+/- .02
.XX	+/- .01
.XXX	+/- .005

Larson Electronics LLC
9419 E US HWY 175, Kemp, TX 75143
Phone: 800.369.6671

www.LarsonElectronics.com
Email: sales@LarsonElectronics.com
Fax: 903.765.7664



Larson Electronics LLC
9419 E US HWY 175, Kemp, TX 75143
Phone: 800.369.6671

www.LarsonElectronics.com
Email: sales@LarsonElectronics.com
Fax: 903.765.7664



Larson Electronics LLC
9419 E US HWY 175, Kemp, TX 75143
Phone: 800.369.6671

www.LarsonElectronics.com
Email: sales@LarsonElectronics.com
Fax: 903.765.7664



Larson Electronics LLC
9419 E US HWY 175, Kemp, TX 75143
Phone: 800.369.6671

www.LarsonElectronics.com
Email: sales@LarsonElectronics.com
Fax: 903.765.7664





Larson Electronics LLC
9419 E US HWY 175, Kemp, TX 75143
Phone: 800.369.6671

www.LarsonElectronics.com
Email: sales@LarsonElectronics.com
Fax: 903.765.7664

Frequently Asked Questions (FAQ)

There are no Faqs