Larson Electronics LLC
9419 E US HWY 175, Kemp, TX 75143
Phone: 800.369.6671

www.LarsonElectronics.com
Email: sales@LarsonElectronics.com
Fax: 903.765.7664

EXPCMR-ALG-1080P-IC-1227

Explosion Proof 1080p Analog Portable Observation Camera - Day/Night - 120/240V - Stranded Wire

Product ID: 146199



Image: EXPCMR-ALG-1080P-IC-1227

Larson Electronics LLC manufactures a wide variety of products, including custom built to spec designs. The pictures displayed for this unit are a general representation of form factor for the product line and may not accurately represent this exact configuration in every detail due to custom builds and changes between similar products in our standard catalog. The specifics for this configuration are listed in the specification table and supporting documentation (CAD files, Dimensional Drawing, Name Plate Diagram, Wiring Diagram, etc.). This means that specific details (receptacles, plugs, wires, connections, mounting brackets, external finishes, etc.) may not be accurately represented in images vs specifications. Please review specifications and do not order based solely on images.

EXPCMR-ALG-1080P-IC-1227 Explosion Proof Remote Observation Camera
Dimensions: 8"L x 6"W x 9"H
Camera Weight: 8 lbs
Total Watts: 3.5W Max
Voltage: 100-240 V 50/60Hz (primary), 12 V DC (secondary)
Video Framerate: 1080p @ 30fps
Image Sensor: 1/2.7" Progressive Scan CMOS
Signal System: NTSC
Effective Pixels: 1930(H) * 1088(V)
Min. Illumination: 0.1 Lux @ F1.2 AGC On / 0 Lux w/ IR
Shutter Speed: 1/30s to 1/50,000s
Lens: 3.6mm
Angle of View: 90°
Day/Night: ICR
Infrared Range: Up to 50`
D/N Mode: Color / BW/ Auto / EXT
White Balance: Auto / User / Push / 8000K / 6000K / 4200K / 3000K
Privacy Mask: On/Off, maximum 2 zones
Motion Detection: On/Off, maximum 4 zones
Blacklight Compensation: Support
Anti-flicker: On/Off
Display Functions: Digital noise reduction, Mirror
Video Output: (1) Analog HD Output
Protocol: Coaxitron
Signal to Ratio: >52 dB
Language: English

Quick Summary
Class I, Divisions 1 & 2, Groups B, C, D
Class I, Zones 1 & 2, Groups IIB+H2, IIA
Class II, Divisions 1 & 2, Groups E, F, G
Class III, Divisions 1 & 2
Ex db IIC Gb
Ex tb IIC Gb Db IP66
NEMA 3, 4, 4X, 7 (B, C, D), 9 (E, F, G)

Ambient Temperature Range: -10°C to +50°C
Housing Materials: Aluminum
Lens Material: Tempered Glass
Mounting: Adjustable Bracket w/ set screws
Power Connection: Terminal Strips, Customer Provided Cord
Signal Connection: Terminal Strips, Customer Provided Stranded Wire, Customer Provided Inverter to BNC Connector
Wiring: Customer Provided 5-Conductor Cable

Special Orders - Special Requirements
Contact us for special requirements
Toll Free: 1-800-369-6671
Intl: 1-903-270-1187
Fax: 1-903-765-7664
E-mail: sales@larsonelectronics.com

The EXPCMR-ALG-1080P-IC-1227 explosion proof high definition analog camera from Larson Electronics is an inspection camera that can be used for remote observation in hazardous locations. It is available in a fixed lens configuration, a 3.6mm 90° lens to capture large wide areas, and can produce an image up to 1080p resolution. The EXPCMR-ALG-1080P-IC-1227 allows operators to see visual process data from a centralized control room up. This portable camera allows operators to use a single cable for signal and power.

Camera Features: The EXPCMR-ALG-1080P-IC-1227 portable explosion proof camera is designed to allow operators to have a live feed from inside a tank, reactor, vessel or other workplace observation in hazardous locations. The explosion proof camera is incredibly durable and ready to be deployed in many different workplace conditions. The camera is operated remotely from a centralized control room which saves both time and money as well as contributing to workplace safety.

This explosion proof camera features an infrared LED array to allow for low light and nighttime visibility. The camera will automatically switch over to IR mode when lux levels drop below a preset level. This allows operators to has up to 50` of visibility in the dark True day/night infrared cutoff filter removal creates a crisp, sharp image that transmits with zero latency to HD resolution via metal clad coax cable to customer provided remote mount DVR systems.

This remote inspection camera features a pressure-resistant 316 stainless steel body and weighs just under 4.5 pounds. The camera itself features 1 lux sensitivity, a 2-wire transmitter and a polished stainless steel mounting bracket as well as a built-in color CCD camera and a 1/3" CCD sensor. The lens of the EXPCMR-ALG-1080P-IC-1227 features a viewing angle between 28° and 60° and the minimum lens to object distance is 3.15 inches.

Wiring: Link-up with the camera is achieved via customer provided 5-conductor cable through one of the 3/4" NPT hubs. The cable is ran back to the customer provided DVR system, mounted outside the hazardous location. Terminal strips within the camera allow customers to terminate the power supply and signal for the camera. This unit operates on universal voltage 120/240V AC 50/60 Hz. A signal inverter (BNC-ALG-SGL-XMFR, one mounted internally in the camera enclosure, one included for connecting on output end of cable) is connected to the customer provided cable, converting the camera signal from stranded wire to BNC connector.

Mounting: The EXPCMR-ALG-1080P-IC-1227 explosion proof remote observation camera is typically mounted to flat surfaces for observation. The included adjustable flat surface bracket has two set screws on the bracket, allowing operators to loosen the mounting bracket, adjust the camera`s tilt orientation, and retighten to hold the camera in position. A single thru-hole mounting bolt allows operators to adjust the rotation of the camera by loosening one bolt. Accessory pole mounts and magnetic mounts are available.

Applications: Vessel, tank and reactor monitoring, remote observation of external facilities, monitoring of cleaning, spray patterns, mixing, foaming, reaction, and level.

At Larson Electronics, we do more than meet your lighting needs. We also provide replacement, retrofit, and upgrade parts as well as industrial grade power accessories. Our craftsmen can custom build any lighting system and/or accessories to fit the unique demands of your operation. A commitment to honesty, quality, and dependability has made Larson Electronics a leader in the lighting and electronics business since 1973. Contact us today at 800-369-6671 or message sales@larsonelectronics.com for more information about our custom options tailored to meet your specific industry needs.

REV	DESCRIPTION	DATE
A	PRODUCTION RELEASE	12/11/2020

EXPCMR-ALG-1080P-IC-1227

LARSON ELECTRONICS®

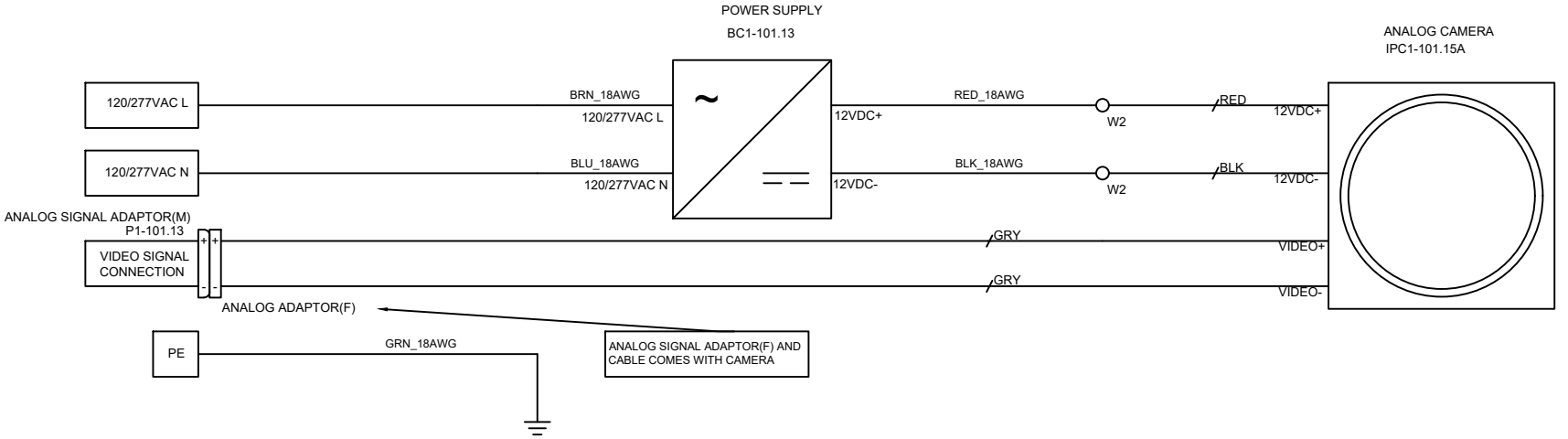

TAGS	QTY	CATALOG	DESCRIPTION
P1-101.13	1	UNV00004238	HD-TVI-CVI-AHD BALUN WITH 4 INCH PIGTAIL SCREW
BC1-101.13	1	UNV00006394	12W 120-12VDC POWER SUPPLY
IPC1-101.15A	1	UNV00004237	2MP 1080P 65FT IR BULLET CAMERA
W2	2	UNV00009802	2 HOLES WAGO

LARSON ELECTRONICS
9419 E US HWY 175,
KEMP, TX 75143

TITLE: EXPCMR-ALG-1080P-IC-1227

DRAWN BY	DATE	REV
K.NGUYEN	12/11/2020	A
CHECKED BY	SHEET #	DRAWING #
P.CRYER	1 OF 1	101

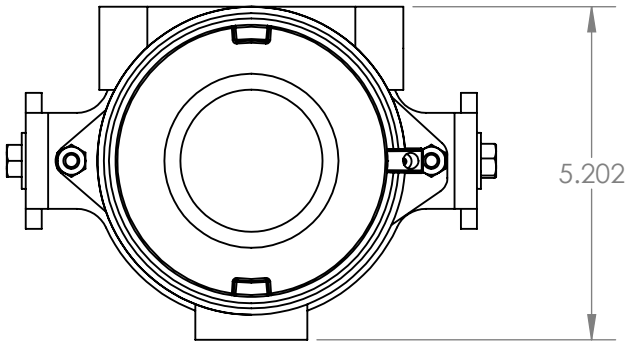

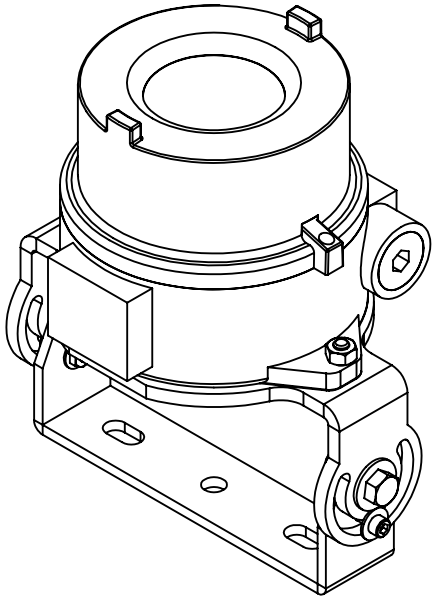

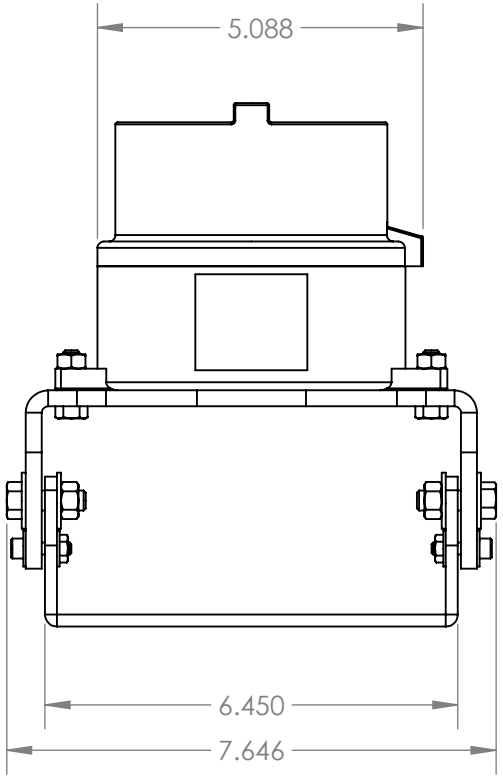

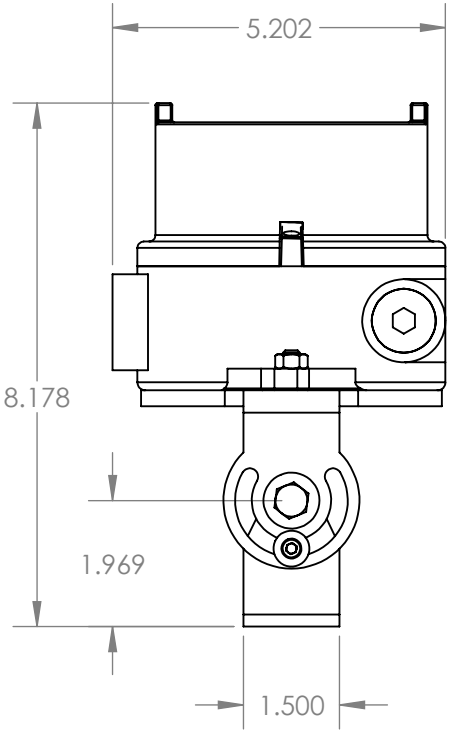

LARSON ELECTRONICS

TITLE:

EXPCMR-ALG-1080P-IC-1227

PROPRIETARY AND CONFIDENTIAL
THE INFORMATION CONTAINED IN THIS DRAWING IS THE SOLE PROPERTY OF LARSON ELECTRONICS LLC. ANY REPRODUCTION IN PART OR AS A WHOLE WITHOUT THE WRITTEN PERMISSION OF LARSON ELECTRONICS LLC IS PROHIBITED.

		NAME
DIMENSIONS ARE IN INCHES	DRAWN	CHRIS THAUER
MATERIAL	CHECKED	JEREMY BLANKENSHIP
DO NOT SCALE DRAWING		

SIZE	DWG. NO.	REV
A		

SCALE: 1:3 SHEET 1 OF 2

5 4 3 2 1

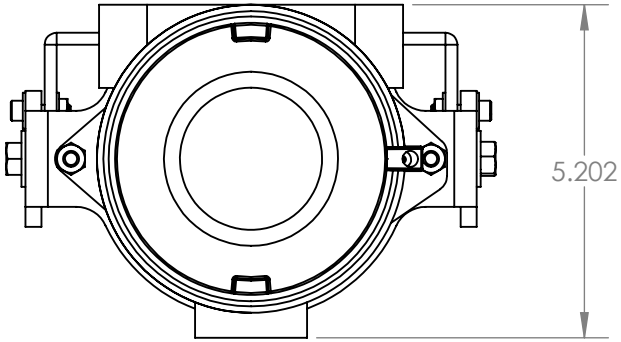

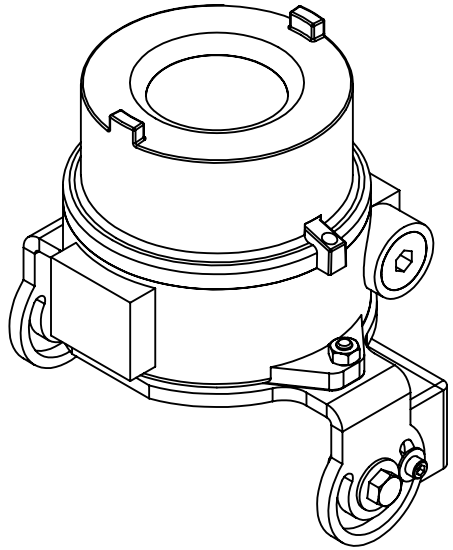

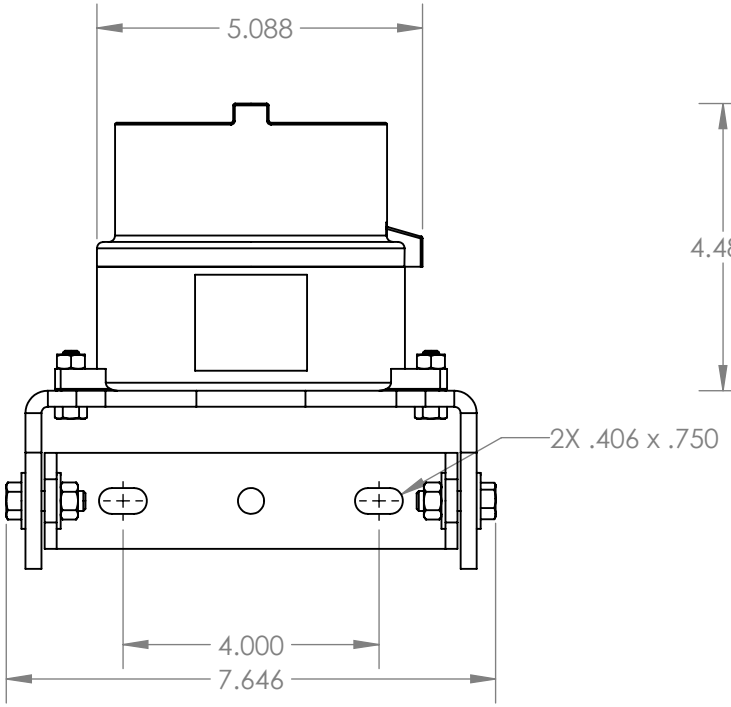

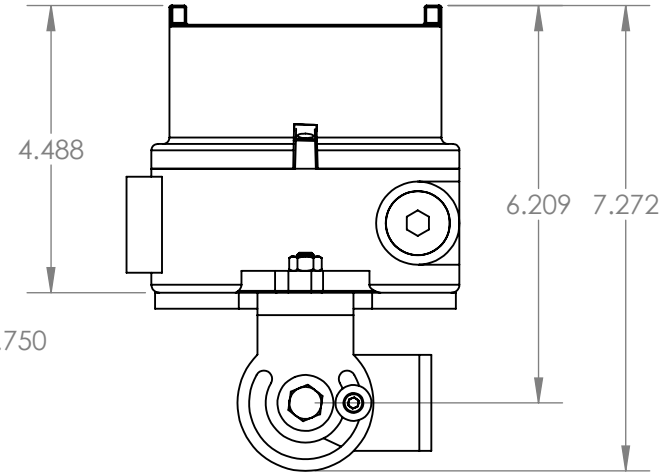

LARSON ELECTRONICS

TITLE:

EXPCMR-ALG-1080P-IC-1227

PROPRIETARY AND CONFIDENTIAL
THE INFORMATION CONTAINED IN THIS DRAWING IS THE SOLE PROPERTY OF LARSON ELECTRONICS LLC. ANY REPRODUCTION IN PART OR AS A WHOLE WITHOUT THE WRITTEN PERMISSION OF LARSON ELECTRONICS LLC IS PROHIBITED.

		NAME
DIMENSIONS ARE IN INCHES	DRAWN	CHRIS THAUER
MATERIAL	CHECKED	JEREMY BLANKENSHIP
DO NOT SCALE DRAWING		

SIZE	DWG. NO.	REV
A		

SCALE: 1:3 SHEET 2 OF 2

5 4 3 2 1

Larson Electronics LLC
9419 E US HWY 175, Kemp, TX 75143
Phone: 800.369.6671

www.LarsonElectronics.com
Email: sales@LarsonElectronics.com
Fax: 903.765.7664

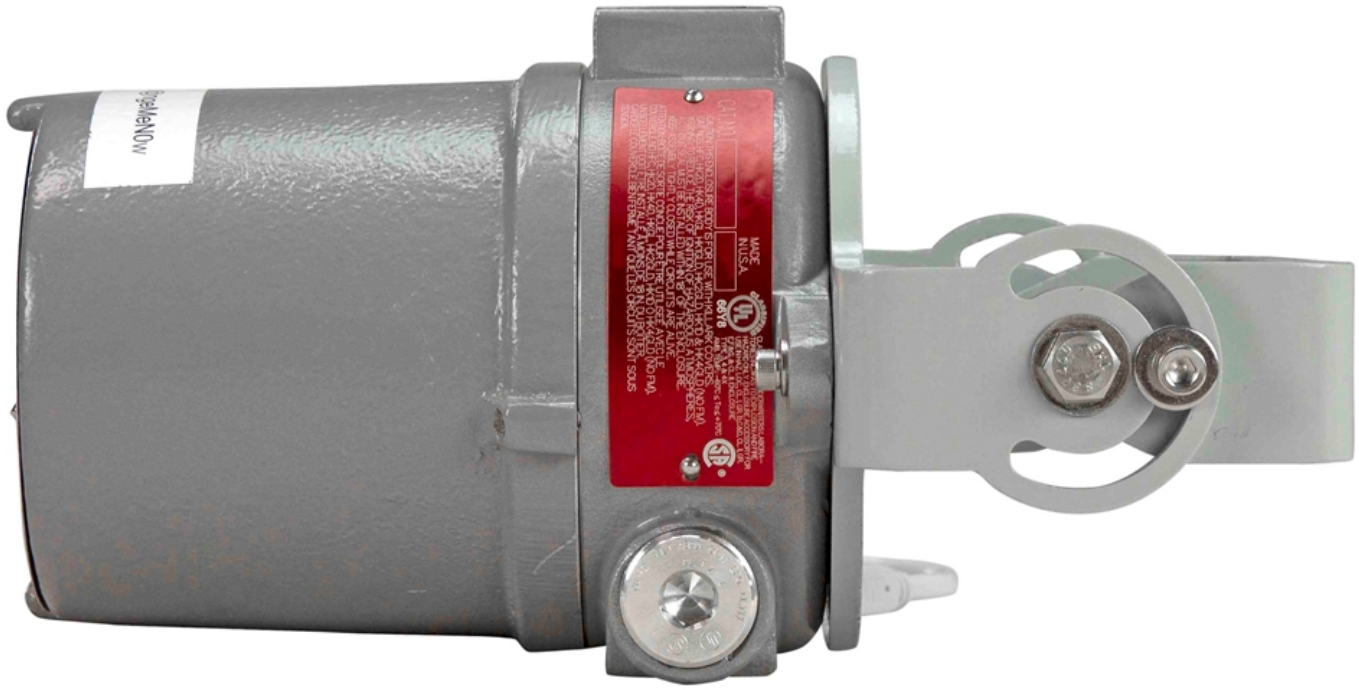

Larson Electronics LLC
9419 E US HWY 175, Kemp, TX 75143
Phone: 800.369.6671

www.LarsonElectronics.com
Email: sales@LarsonElectronics.com
Fax: 903.765.7664



Larson Electronics LLC
9419 E US HWY 175, Kemp, TX 75143
Phone: 800.369.6671

www.LarsonElectronics.com
Email: sales@LarsonElectronics.com
Fax: 903.765.7664



Larson Electronics LLC
9419 E US HWY 175, Kemp, TX 75143
Phone: 800.369.6671

www.LarsonElectronics.com
Email: sales@LarsonElectronics.com
Fax: 903.765.7664

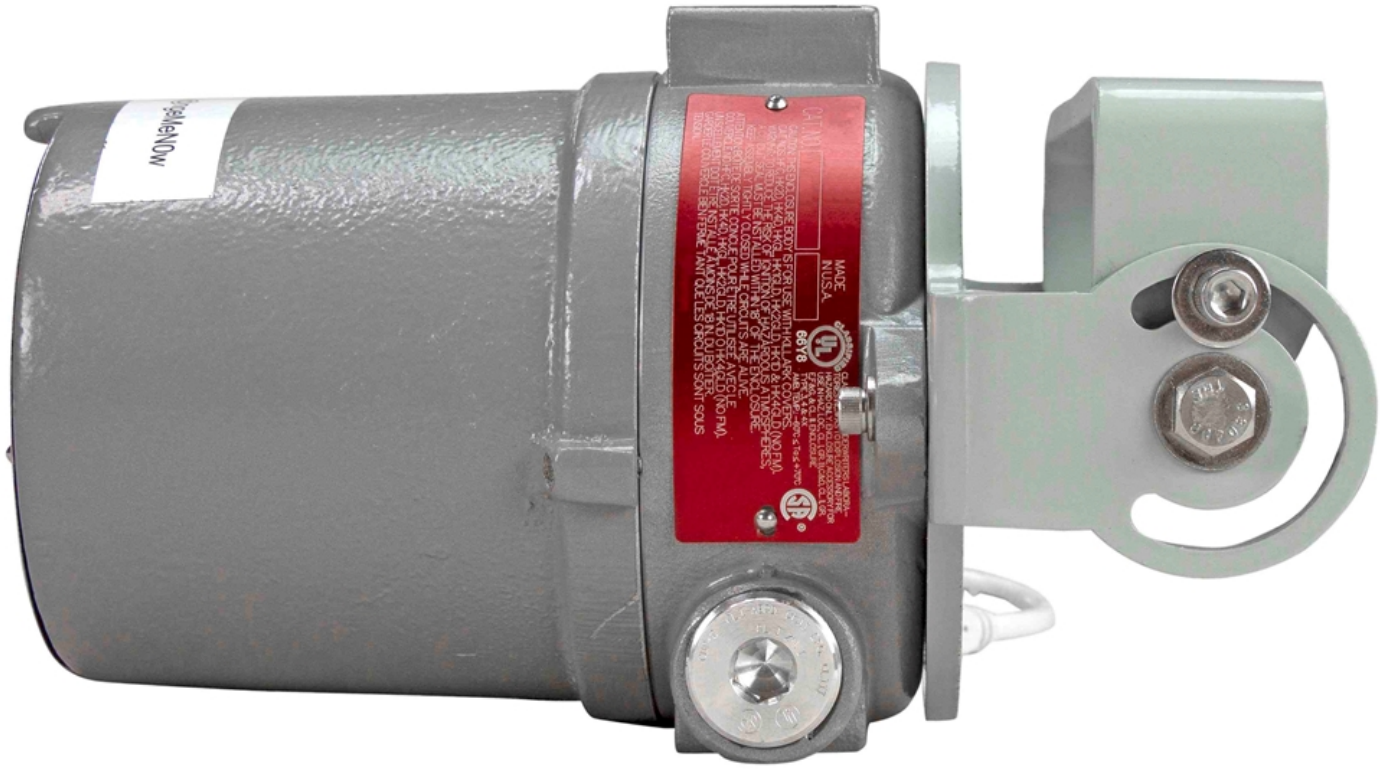

Certification

Manufacturer: Larson Electronics LLC
Address: 9419 US-HWY 175
Kemp, Texas 75143

Declare the following equipment conforms to the standard(s) as listed:

Model: EXPCMR Series
Description: Explosion Proof Camera

Evaluated Listings:

UL: FTRV.E83969, BGYM.E83969, FTRX.E150827 – NEC / United States standards
UL: FTRV.E83969, BGYM7.E83969, FTRX7.E150827 – CEC / Canada standards
UL: DEMKO 06 ATEX 141023X, DEMKO 06 ATEX 0521635X **–** ATEX standards
UL: IEC Ex UL 14.0060X, IEC Ex UL 14.0069X – IEC Ex standards
CSA: LR11716 – CEC / Canada standards

The EXPCMR Series is certified to NEC, CEC, ATEX, and IEC Ex standards for hazardous locations for:

- NEC: Class I, Divisions 1&2, Groups B, C, D; Class II, Divisions 1&2, Groups E, F, G
- NEC: Class I, Zones 1 & 2, Groups IIB + H2, IIA
- CEC: Class I, Divisions 1&2, Groups B, C, D; Class II, Divisions 1&2, Groups E, F, G
- CEC: Class I, Zones 1 & 2, Groups IIB + H2, IIA
- ATEX: Ex II 2 G D, -60°C ≤ Ta ≤ +70°C
- IEC EX: Ex db IIC “T4...T3” Gb, Ex e IIC “T4...T3” Gb, Ex tb IIIC “T110°C...T140°C” Db IP66, -60°C ≤ Ta ≤ +70°C

The EXPCMR Series is comprised of a Killark HK series device enclosure. This device enclosure contains a low voltage camera, power supply, LED assembly, custom mounting of the electronics, wire connections, and an aluminum mounting bracket for the enclosure. This assembly is built to NEC, CEC, ATEX, and IEC standards for hazardous locations.

Signed for and on behalf of: Larson Electronics, LLC
Place of issue: Kemp, TX

Signature: James Thomas

Name: James Thomas
Position: Operations Manager

LARSON ELECTRONICS LLC • 9419 E US HWY 175 • KEMP, TX 75143
p: 1-800-369-6671 • intl: 903-498-3363 • f: 903-498-3364 • sales@larsonelectronics.com

intertek
Total Quality. Assured.



<- Back

Product Description

Title:	INDUSTRIAL CONTROL PANELS
Company:	LARSON ELECTRONICS LLC - Kemp, TX USA
Product Information:	Industrial Control Panels For General Use.
Evaluated to the following:	A representative sample of the listed devices have been tested, investigated and found to comply with the requirements of the Standard(s) for Industrial Control Panels (UL-508A) and are identified with the ETL Listed Mark.

<- Back

Contact Us

ETL listed products that are in doubt or for products that do not appear in the directory, please request a verification of certification.
Americas+1-888-347-5478 (or +1-847-660-7407)
Email etldirectory@intertek.com

Intertek Home
Product Directories
DLP on mobile devices

Inspector Center

Get up-to-date information on everything from our Accreditations to our Certifications and Marks. Learn more...

News

Intertek Unveils New Design for Product Safety and Quality Certification Marks. Learn more...

© 2010 Intertek All Rights Reserved.
All other product or service names are the property of their respective owners.

intertek
Total Quality. Assured.



<- Back

Product Description

Title:	EXPLOSION-PROOF & DUST IGNITION-PROOF ELECTRICAL EQUIPMENT FOR USE IN HAZARDOUS (CLASSIFIED) LOCATIONS
Company:	LARSON ELECTRONICS LLC - Kemp, TX USA
Product Information:	Explosion-proof or dust-ignition-proof Industrial Control Panels for use in Hazardous (Classified) Locations, Model Nos. Custom Industrial Control Panels
Evaluated to the following:	A representative sample of the listed devices have been tested, investigated and found to comply with the requirements of the Standard(s) for Explosion-Proof and Dust Ignition-Proof Electrical Equipment for Use in Hazardous (Classified) Locations (UL-1203) and are identified with the ETL Listed Mark.

<- Back

Contact Us

ETL listed products that are in doubt or for products that do not appear in the directory, please request a verification of certification.
Americas+1-888-347-5478 (or +1-847-660-7407)
Email
etldirectory@intertek.com

Intertek Home
Product Directories
DLP on mobile devices

Inspector Center

Get up-to-date information on everything from our Accreditations to our Certifications and Marks. Learn more...

News

Intertek Unveils New Design for Product Safety and Quality Certification Marks. Learn more...

© 2010 Intertek All Rights Reserved.
All other product or service names are the property of their respective owners.

intertek
Total Quality. Assured.

<- Back

Product Description

Title:	INDUSTRIAL CONTROL EQUIPMENT
Company:	LARSON ELECTRONICS LLC - Kemp, TX USA
Product Information:	Industrial Control Panels For General Use. Industrial Control Panels Relating to Hazardous (Classified) Locations, Custom Industrial Control Panels. Power Distribution System, Model Nos. MGL, MPD, MGS series; Followed by AAK-PBB.FFF-SCC.GGG-EEXCCC.DDD; Where AA = 2,3,5,7,9,15,20,25,30,45,50,75; BB = 1P, 3P; FFF = 480,240,208,120; CC = 1P,3P; GGG = 480,240,208,120; EE = # of outlets; CCC = voltage; DDD = outlet amperage.
Evaluated to the following:	A representative sample of the listed devices have been tested, investigated and found to comply with the requirements of the Standard(s) for Industrial Control Equipment (CAN/CSA-C22.2 No. 14) and are identified with the cETL Listed Mark.

<- Back

Contact Us

ETL listed products that are in doubt or for products that do not appear in the directory, please request a verification of certification.
Americas+1-888-347-5478 (or +1-847-660-7407)
Email
etldirectory@intertek.com

Intertek Home
Product Directories
DLP on mobile devices

Inspector Center

Get up-to-date information on everything from our Accreditations to our Certifications and Marks. Learn more...

News

Intertek Unveils New Design for Product Safety and Quality Certification Marks. Learn more...

© 2010 Intertek All Rights Reserved.
All other product or service names are the property of their respective owners.

intertek
Total Quality. Assured.

<- Back

Product Description

Title:	ENCLOSURES
Company:	LARSON ELECTRONICS LLC - Kemp, TX USA
Product Information:	Explosion-proof or dust-ignition-proof Industrial Control Panels for use in Hazardous (Classified) Locations, Model Nos. Custom Industrial Control Panels Luminaires, Model Nos. EPL-48-2L-LED-SFC, EPL-24-2L-LED-SFC. for use in Hazardous Locations: Class I, Div. 1, Groups C and D T5 or T6 -20°C < Tamb < 40°C Class II, Div. 1., Groups E, F, and G; Class III Div.1 T3B -20°C < Tamb < 40°C
Evaluated to the following:	A representative sample of the listed devices have been tested, investigated and found to comply with the requirements of the Standard(s) for Enclosures for use in Class II, Groups E, F, G Hazardous Locations (CAN/CSA-C22.2 No. 25) and are identified with the cETL Listed Mark.

<- Back

Contact Us

ETL listed products that are in doubt or for products that do not appear in the directory, please request a verification of certification.
Americas+1-888-347-5478 (or +1-847-660-7407)
Email etldirectory@intertek.com

Intertek Home
Product Directories
DLP on mobile devices

Inspector Center

Get up-to-date information on everything from our Accreditations to our Certifications and Marks. Learn more...

News

Intertek Unveils New Design for Product Safety and Quality Certification Marks. Learn more...

© 2010 Intertek All Rights Reserved.
All other product or service names are the property of their respective owners.

intertek
Total Quality. Assured.



<- Back

Product Description

Title:	EXPLOSION-PROOF ENCLOSURES FOR USE IN CLASS I HAZARDOUS LOCATIONS
Company:	LARSON ELECTRONICS LLC - Kemp, TX USA
Product Information:	Explosion-proof or dust-ignition-proof Industrial Control Panels for use in Hazardous (Classified) Locations, Model Nos. Custom Industrial Control Panels
Evaluated to the following:	A representative sample of the listed devices have been tested, investigated and found to comply with the requirements of the Standard(s) for Explosion-Proof Enclosures for Use in Class I Hazardous Locations (CAN/CSA-C22.2 No. 30) and are identified with the cETL Listed Mark.

<- Back

Contact Us

ETL listed products that are in doubt or for products that do not appear in the directory, please request a verification of certification.
Americas+1-888-347-5478 (or +1-847-660-7407)
Email
etldirectory@intertek.com

Intertek Home
Product Directories
DLP on mobile devices

Inspector Center

Get up-to-date information on everything from our Accreditations to our Certifications and Marks. Learn more...

News

Intertek Unveils New Design for Product Safety and Quality Certification Marks. Learn more...

© 2010 Intertek All Rights Reserved.
All other product or service names are the property of their respective owners.

EU Declaration Of Conformity

Manufacturer :	Killark Electric , Div of Hubbell Inc.(Delaware), 2112 Fenton Logistics Park Blvd , Fenton, MO 63026, USA Tel : (314) 531-0460 | Email: killarkinfo@hubbell.com

Declares in its sole responsibility that the product mentioned below

Product Designation :	Increased Safety Enclosures with Terminal Blocks
Type Designation :	HK Series

is in conformity with the essential protection requirements of the following Directive(s),Certification Scheme(s) and Standard(s).

Directive(s) / Scheme(s)	Standard(s)
2014/34/EU ATEX Directive	EN 60079-0:2012+A11:2013 EN 60079-7:2015 EN 60079-31:2014
IEC Certification Scheme For Explosive Atmosphere	IEC 6007-0:2011, Ed. 6.0 IEC 60079-7:2015, Ed. 5.0 IEC 60079-31:2013, Ed. 2.0
Others	EN 60529:1991+A1:2000+A2:2013

Type Examination Certificate	
ATEX	IECEx
DEMKO 06 ATEX 0521635X Rev. 1	IECEx UL 14.0069X Issue No. 1

Certification Body	
ATEX	IECEx
UL International DEMKO A/S, Lyskaer 8, P.O. Box 514, DK-2730, Herlev, Denmark Reg No.: 0539	UL LLC, 333 Pfingsten Rd. Northbrook IL 60062-2096 United States Of America

Marking (Note 1)	
ATEX	IECEx
II 2G Ex eb IIC T4...T3 Gb II 2D Ex tb IIIC T110 ^{0}C ...T140 ^{0}C Db IP66 CE 2813 Ta = -60 ^{0}C to +70 ^{0}C	Ex eb IIC T4...T3 Gb Ex tb IIIC T110 ^{0}C ...T140 ^{0}C Db IP66 T_a = -60 ^{0}C to +70 ^{0}C

Note 1: Ratings provided are maximum ratings and may vary depend on the components used and their installation.Refer Certificate,Installation & Operating manual and rating plate on equipment for details.

QAN compliance has been approved by Notified Body CSA Group Netherlands B.V.,Utrechtseweg 310,6812 AR, Arnhem,Netherlands. (Notified Body number 2813).

To verify the status and authencity of IECEx Certificate of Conformity, please visit Official IECEx Website

Signature :

Name : Tom Michalski
Designation : Certifications Manager
Place and Date : Fenton, 25-10-2019

Material Safety Data Sheet

To Whom It May Concern,

The Larson Electronics LLC EXPCMR industrial line of cameras for hazardous locations are considered "ARTICLES" under 29 CFR 1910-1200, the OSHA Hazard Communication Standard, and do not require a Material Safety Data Sheet (MSDS). This document does not expire.

Articles are specifically exempt from the regulations of this standard. OSHA defines an article as follows:

1910-1200(c) – Article means a manufactured item other than a fluid or particle:

i. Which is formed to a specific shape or design during manufacture;
ii. Which has end use function(s) dependent in whole or in part upon its shape or design during end use; and
iii. Which under normal conditions does not release more than very small quantities.

The "hazardous location" and "explosion proof" are terminology for the environment where these products will be installed. This is not to be confused with "hazardous materials;" this product does not contain any hazardous materials.

Regards,

Ray Smith
Larson Electronics, LLC.

LARSON ELECTRONICS LLC • 9419 E US HWY 175 • KEMP, TX 75143
p: 1-800-369-6671 • intl: 903-498-3363 • f: 903-498-3364 • sales@larsonelectronics.com

CERTIFICATE OF COMPLIANCE

Certificate Number	E150827
Report Reference	E150827-19920928
Issue Date	2020-MARCH-19
Issued to:	KILLARK, DIV OF HUBBELL INC (DELAWARE) 2112 Fenton Logistics Park Blvd Fenton MO 63026
This certificate confirms that representative samples of	ENCLOSURE ACCESSORIES FOR USE IN HAZARDOUS LOCATIONS SEE ADDENDUM PAGE
	Have been investigated by UL in accordance with the Standard(s) indicated on this Certificate.
Standard(s) for Safety:	UL 1203, STANDARD FOR EXPLOSION-PROOF AND DUST-IGNITION-PROOF ELECTRICAL EQUIPMENT FOR USE IN HAZARDOUS (CLASSIFIED) LOCATIONS.
Additional Information:	See the UL Online Certifications Directory at https://iq.ulprospector.com for additional information.

This *Certificate of Compliance* does not provide authorization to apply the UL Mark. Only the UL Follow-Up Services Procedure provides authorization to apply the UL Mark.

Only those products bearing the UL Mark should be considered as being UL Certified and covered under UL's Follow-Up Services.

Look for the UL Certification Mark on the product.

Bruce Mahrenholz, Director North American Certification Program

UL LLC

Any information and documentation involving UL Mark services are provided on behalf of UL LLC (UL) or any authorized licensee of UL. For questions, please contact a local UL Customer Service Representative at http://ul.com/aboutul/locations/

CERTIFICATE OF COMPLIANCE

Certificate Number	E150827
Report Reference	E150827-19920928
Issue Date	2020-MARCH-19

This is to certify that representative samples of the product as specified on this certificate were tested according to the current UL requirements.

Enclosure accessories for use in Class I, Groups B, C, and D; Class II, Groups E, F, and G hazardous locations having the following designations.

Cat. No. HKB, HKBD, 2HKB, HKSB or 2HKSB enclosure body followed by -01, -02, -20, -21, -22, -01S, -02S, -21S, -22S, -2S1S, -2S2S, -2SO, -2S1, or -2S2; Cat. No. HFC, HK2D, HK4D, HKGL, HK2GLD, HFSC, HKS4D, HKSGL, or HKS2GLD enclosure covers.

Enclosure accessories for use in Class I, Groups A, B, C and D; Class II, Groups E, F and G hazardous locations having the following designations.

Cat. No. HKBX enclosure body followed by -10, -1S, -20, -2S, -M20, or -M25, followed by -SM, -2S, -M25, -MX; HKBX Series Cat. No. HFCX, HKXGL, HKX2D, and HKX2GLD enclosure covers.

Bruce Mahrenholz, Director North American Certification Program

UL LLC

Any information and documentation involving UL Mark services are provided on behalf of UL LLC (UL) or any authorized licensee of UL. For questions, please contact a local UL Customer Service Representative at http://ul.com/aboutul/locations/

CERTIFICATE OF COMPLIANCE

Certificate Number	E83969
Report Reference	E83969-19890322
Issue Date	2020-MARCH-19
Issued to:	KILLARK, DIV OF HUBBELL INC (DELAWARE) 2112 Fenton Logistics Park Blvd Fenton MO 63026
This certificate confirms that representative samples of	ENCLOSURES FOR USE IN HAZARDOUS LOCATIONS. ENCLOSURES FOR USE IN ZONE CLASSIFIED HAZARDOUS LOCATIONS. SEE ADDENDUM PAGE Have been investigated by UL in accordance with the Standard(s) indicated on this Certificate.
Standard(s) for Safety:	UL 1203, STANDARD FOR EXPLOSION-PROOF AND DUST-IGNITION-PROOF ELECTRICAL EQUIPMENT FOR USE IN HAZARDOUS (CLASSIFIED) LOCATIONS.
Additional Information:	See the UL Online Certifications Directory at https://iq.ulprospector.com for additional information.

This *Certificate of Compliance* does not provide authorization to apply the UL Mark. Only the UL Follow-Up Services Procedure provides authorization to apply the UL Mark.

Only those products bearing the UL Mark should be considered as being UL Certified and covered under UL's Follow-Up Services.

Look for the UL Certification Mark on the product.

Bruce Mahrenholz, Director North American Certification Program

UL LLC

Any information and documentation involving UL Mark services are provided on behalf of UL LLC (UL) or any authorized licensee of UL. For questions, please contact a local UL Customer Service Representative at http://ul.com/aboutul/locations/

CERTIFICATE OF COMPLIANCE

Certificate Number	E83969
Report Reference	E83969-19890322
Issue Date	2020-MARCH-19

This is to certify that representative samples of the product as specified on this certificate were tested according to the current UL requirements.

Cat. No. HKB, HKBD, or HKSB (HKB and HKSB may be prefixed by 2) followed by B, GL, 1GLD, 1D, 2GLD, 2D, 4GLD or 4D may be followed by C, may be followed by B, GL, 1GLD, 1D, 2GLD, 2D, 4GLD or 4D, may be followed by C, -10, -1S, -20, and -2S, may be followed by –MOD for Class I, Groups B, C, and D; Class II, Groups E, F, and G; Class III ; Class I, Zone 1, AEx db IIC Hazardous Locations.

Cat. No. HKBX, may be followed by B, GL, 2D or 2GLD, may be followed by 10, 1S, 20, 2S, M20, or M25, may be followed by SM, 2S, M25, or MX for use in Class I, Groups A, B, C and D; Class II, Groups E, F, and G; Class III Hazardous Locations.

Service Temperature: -60°C to +70°C.

Type 3, 4 and 4X Rated.

Bruce Mahrenholz, Director North American Certification Program

UL LLC

Any information and documentation involving UL Mark services are provided on behalf of UL LLC (UL) or any authorized licensee of UL. For questions, please contact a local UL Customer Service Representative at http://ul.com/aboutul/locations/

Certification Record

Contact an Expert (https://www.csagroup.org/contact/)

Inc. (Delaware) 2112 Fenton Logistics Park Blvd, Fenton Missouri United States 63026	OUTLET BOXES AND FITTINGS-Boxes - For Hazardous Locations	

Contact an Expert (https://www.csagroup.org/contact/)

Class I, Groups B, C, and D; Class II, Groups E, F and G; Class III, Types 3, 4 and 4X CSA (complete enclosures and component packaged).

- HK and 2HK Series instrument enclosure (Component Packaged): HKB, HKSB, HKBD, 2HKB, or 2HKSB box with optional covers: HFC, HFSC, HKGL, HKSGL, HK1D, HKS2D, HK4D, HKS4D, HK1GLD, HK2GLD, HKS2GLD or HK4GLD denoting flat (F), dome (D), and window covers (GL); with 3/4 in. conduit entries.
- HK and 2HK Series instrument enclosures, Cat No: HKB, HKSB, HKBD, 2HKB, or 2HKSB; may be followed with the suffix 01, 02, 20, 21, 22, 01S, 02S, 21S, 22S, 2S1S, 2S2S, 2SO, 2S1, or 2S2.
- HK Series instrument enclosures, Cat No: HKB, HKSB, or HKBD followed by Suffix B, 1D, 2D, 4D, GL, 1GLD, 2GLD or 4GLD; may be followed with the suffix letter C; with 3/4 in. max conduit entries.
- 2HK Series instrument enclosures Cat No: 2HKB, 2HKSB followed by suffix B, 2D, 4D, GL, or 2GLD, followed by suffix B, 2D, 4D, GL, or 2GLD; may be followed with the suffix letter C; may be followed with the suffix -MOD; with 3/4 in. conduit entries.

Note: Series HK, 2HK and HKB instrument enclosures with or without optional covers (component packaged) when suffix S is added to the Cat No it denotes 316 stainless steel construction. In addition, when suffix -4X is added to the Cat No it denotes enclosure type rating 4X.

Class I, Groups A, B, C, and D; Class II, Groups E, F and G; Class III, Types 3, 4 and 4X; Ambinet Range (-60C to + 70C) (Complete enclosures and component packaged).

- No. HKBX, may be followed by B, GL, 2D or 2GLD, may be followed by 10, 1S, 20, 2S, M20, or M25, may be followed by SM, 2S, M25, or MX. HKBX Series Cat. No. HFCX, HKXGL, HKX2D, and HKX2GLD enclosure covers.

- Outlet Boxes, Cat No SPM25131N34 and SPM25132N34, conduit 4 in. max.
- Series GR outlet boxes (component packaged); Cat No GRBB conduit 1-1/2 in max with optional covers GRB-BC, 2GRBD, 4GRBD, GL-275; Cat No GREB conduit 2 in max with

We're always here to help. Let's talk.

We're here to answer your questions and help you get started right away. Call or send us a message anytime.

Contact Us (https://www.csagroup.org/contact)

Contact an Expert (https://www.csagroup.org/contact/)

(https://www.csagroup.org/)

CSA OnDemand™ (http://store.csagroup.org/ondemand/s/?language=en_US)

Informs & Notices (/informs-notices/)

Submit an Incident Report (/submit-a-report)

Agreement on Acceptance of Components (/agreement-acceptance-components/)

CSA Communities (http://community.csagroup.org/login.jspa?referer=%252Findex.jspa)

Alerts & Recalls (/product-alerts-recalls/)

Report Suspect Counterfeit Marks (/testing-certification/marks-labels/brand-protection/reporting-suspect-counterfeit-marks)

Resources & Insights (/resources-insights/)

Standards Research (/standards/standards-research/)

CSA Group Product Listing (/testing-certification/product-listing/)

Sign up for our Newsletter (https://www.csagroup.org/newsletter/)

(http://www.facebook.com/CSAGroup/) (http://www.linkedin.com/company/csa-group/) (http://twitter.com/CSA_Group/) (http://www.youtube.com/user/csastandards/)

Contact an Expert (http://www.csagroup.org/contact/)

© 2020 CSA Group (https://www.csagroup.org)

Contact an Expert (https://www.csagroup.org/contact/)

Certification

Manufacturer: Larson Electronics LLC
Address: 9419 US-HWY 175
Kemp, Texas 75143

Declare the following equipment conforms to the standard(s) as listed:

Model: EXPCMR Series
Description: Explosion Proof Camera

Evaluated Listings:

CE: DIRECTIVE 2014/35/EU - LOW VOLTAGE DIRECTIVE
CE: DIRECTIVE 2014/30/EU - EMC DIRECTIVE
CE: Regulation (EC) No 1907/2006 - REACH REGULATION
CE: DIRECTIVE 2015/863/EU - ROHS DIRECTIVE

The EXPCMR series complies with the essential protection requirements of the European Parliament of the Council Directive for Low Voltage Directive, EMC Directive, REACH Regulation, and RoHS Directive. This certification applies to all specimens manufactured in accordance to the manufacture's drawings.

Signed for and on behalf of: Larson Electronics, LLC
Place of issue: Kemp, TX

Signature: James Thomas

Name: James Thomas
Position: Operations Manager

LARSON ELECTRONICS LLC • 9419 E US HWY 175 • KEMP, TX 75143
p: 1-800-369-6671 • intl: 903-498-3363 • f: 903-498-3364 • sales@larsonelectronics.com

Certification

Manufacturer: Larson Electronics LLC
Address: 9419 US-HWY 175
Kemp, Texas 75143

Declare the following equipment conforms to the standard(s) as listed:

Model: EXPCMR Series
Description: Explosion Proof Camera

Evaluated Listings:

CE: Regulation (EC) No 1907/2006 - REACH REGULATION
CE: DIRECTIVE 2015/863/EU - ROHS DIRECTIVE

This is to certify that products offered by Larson Electronics LLC comply with the Reduction of Hazardous Substances (RoHS) directives. Directive 2002/95/EC became effective on 1 July 2006. It restricts the use of six substances in the manufacture of electrical and electronic equipment. This directive was revised in June 2011 and is now referred to as directive 2011/65/EU. Directive 2015/863/EU amending Annex II to Directive 2011/65/EU announced plans to add four substances from 22 July 2019.

We hereby certify that the equipment specified above conforms to the Directive(s) by containing less of the restricted substances than the stated limits.

Signed for and on behalf of: Larson Electronics, LLC
Place of issue: Kemp, TX

Signature: James Thomas

Name: James Thomas
Position: Operations Manager

LARSON ELECTRONICS LLC • 9419 E US HWY 175 • KEMP, TX 75143
p: 1-800-369-6671 • intl: 903-498-3363 • f: 903-498-3364 • sales@larsonelectronics.com

Certification

Manufacturer: Larson Electronics LLC
Address: 9419 US-HWY 175
Kemp, Texas 75143

Declare the following equipment conforms to the standard(s) as listed:

Model: EXPCMR Series
Description: Explosion Proof Camera

Evaluated Listings:

CE: Regulation (EC) No 1907/2006 - REACH REGULATION

This letter establishes the opinion of Larson Electronics LLC regarding the status, under the current European Union ("EU") Regulations on Registration, Evaluation, Authorization, and Restriction of Chemical Substances ("REACH").

REACH does not apply to manufactured products which are referred to as "completed articles". Substances (chemicals) are subject to REACH registration, NOT products.

In addition, Articles are exempt from the REACH requirements if (a) the Article does not contain a substance of very high concern or candidate substance in an amount exceeding 0.1% weight by weight, and (b) if substances present in the Article in excess of 1 ton per year per importer are not expected nor intended to be released.

Based on communication with our raw material suppliers, we conclude that to the best of our knowledge our products requiring REACH compliance do not contain any of the currently listed SVHC in concentrations of 0.1% or above.

Accordingly, we foresee no registration or pre-registration requirement for the products we supply.

Signed for and on behalf of: Larson Electronics, LLC
Place of issue: Kemp, TX

Signature: James Thomas

Name: James Thomas
Position: Operations Manager

LARSON ELECTRONICS LLC • 9419 E US HWY 175 • KEMP, TX 75143
p: 1-800-369-6671 • intl: 903-498-3363 • f: 903-498-3364 • sales@larsonelectronics.com

Larson Electronics LLC
9419 E US HWY 175, Kemp, TX 75143
Phone: 800.369.6671

www.LarsonElectronics.com
Email: sales@LarsonElectronics.com
Fax: 903.765.7664

Frequently Asked Questions (FAQ)

There are no Faqs