Larson Electronics LLC
9419 E US HWY 175, Kemp, TX 75143
Phone: 800.369.6671

www.LarsonElectronics.com
Email: sales@LarsonElectronics.com
Fax: 903.498.3364

LEDWL-STRB-BLUE-1224

25W Blue LED Warning Spotlight - 2250 Lumens - 12-24V DC - Blue Strobing Safety Light - IP67

Product ID: 144461



Larson Electronics LLC manufactures a wide variety of products, including custom built to spec designs. The pictures displayed for this unit are a general representation of form factor for the product line and may not accurately represent this exact configuration in every detail due to custom builds and changes between similar products in our standard catalog. The specifics for this configuration are listed in the specification table and supporting documentation (CAD files, Dimensional Drawing, Name Plate Diagram, Wiring Diagram, etc.). This means that specific details (receptacles, plugs, wires, connections, mounting brackets, external finishes, etc.) may not be accurately represented in images vs specifications. Please review specifications and do not order based solely on images.

LEDWL-STRB-BLUE-1224 Blue LED Warning and Indicator Strobing Light

Lamp Type: Blue Strobing LED
Dimensions: 6"-H x 3.91"-W x 3.59"-D
Watts: 2 lbs
Voltage: 12-24V DC
Watts: 25W
Lumens: 2,250
Luminous Efficacy: 90 Lm/W
LED Light Color: Blue
LED Life Expectancy: 50,000 hours
Led Drive %: 90%
Lighting Configuration: 5° Spot Beam
Strobe Rate: 2 Hz
Ambient Operating Temp Range: -40°C to +80°C
Housing Material: Die Cast Aluminum
Housing Colors: Black
Lens Material: Polycarbonate
Optic: PMMA
Mounting:U-bracket style trunnion with tension bolt
Wiring: 10` 16/3 SOOW Input with 20` 16/3 from Poly Box to Light

Ratings/Approvals

IP67 Waterproof to 1 Meter
Impact/Vibration Resistant
Shatterproof Lens
Ambient Op Temp -40°C to +85°C
Warn Pedestrians of Oncoming Vehicles
Visible With High Illuminate Warehouse Lighting

Special Orders - Special Requirements

Contact us for special requirements

Toll Free: 1-800-369-6671
Intl: 1-903-270-1187
E-mail: sales@larsonelectronics.com

The LEDWL-STRB-BLUE-1224 from Larson Electronics is a Warning and Indicator Strobing LED Spotlight that is designed to provide a warning to workers and pedestrians of hazards or to indicate other work area or

environmental situations. This ultra compact blue LED light produces a 2,250 lumen output with low amp draw and a 50,000 hour service life. Additionally, the LEDWL-STRB-BLUE-1224 features an external power source that allows the warning light to operate on 12-24V DC and have the ability to strobe. This provides operators with a versatile and powerful warning and indicator safety light.

The LEDWL-STRB-BLUE-1224 blue LED warning and indicator light from Larson Electronics produces 2250 lumens of sharp blue light and strobes at a rate of 2Hz. Five 5-watt blue LED producing 450 lumens each are combined with high purity optics to produce a narrow 5° degree spread spot beam, providing a high intensity center beam which is visible during daytime and nighttime operations. This particular unit is ultra compact at only 6" tall by 3.91" wide by 3.36" deep, which makes it ideal for applications where mounting space is at a premium.



Click Photo to Enlarge

LED Benefits: Unlike gas burning and arc type lamps that have glass bulbs, LEDs have no filaments or fragile housings to break during operation and/or transportation. Instead of heating a small filament or using a combination of gases to produce light, light emitting diodes (LEDs) use semi-conductive materials that illuminate when electric current is applied, providing instant illumination with no warm up or cool down time before re-striking. Because there is no warm up period, this light can be cycled on and off with no reduction in lamp life.

LED lights run at significantly cooler temperatures than traditional metal halide and high pressure sodium lights and contain no harmful gases, vapors, or mercury, making them both safer and more energy efficient. No extra energy is wasted in cooling enclosed work areas due to external heat emissions from bulb type lights, and the operator risks associated with traditional lighting methods, such as accidental burns and exposure to hazardous substances contained in the glass bulbs, are eliminated. In addition, LEDs are also safer for the environment as they are 100% recyclable, which eliminates the need for costly special disposal services required with traditional gas burning and arc type lamps.

Voltage: The drivers in this unit provide the ability to automatically monitor and adjust input current to maintain the correct LED voltage levels regardless of input levels across a specific range. These LED lights can operate on current ranging from 9 to 60V DC without any modifications necessary as a result. (347-480V AC and 120-277V AC available upon request). This ability to sense and adjust input current also provides protection against voltage spikes and drops that can occur in electrical systems which would otherwise result in burning up or premature LED failure without it.

Durability: The LEDWL-STRB-BLUE-1224 LED light Larson Electronics offers IP67 rated construction that is designed to withstand the rigors of demanding of environmental and operating conditions yet are lighter and smaller than our LEDLB-E series of extreme duty light bars. The this series is designed to provide a low profile, light weight, high performance light bar that can be mounted where other lights will not fit. These units can operate in temperatures of -40° Celsius to 80° Celsius, are waterproof to 1 meter and resist ingress of dust, dirt and humidity. The housings are formed from extruded aluminum and the lenses are unbreakable polycarbonate. The LEDs offer inherent LED resistance to shocks and vibrations contributing to these units 15.6Grms rating of vibration tolerance.

Heat Management: Heat is the single largest factor in premature LED failure and color shifting. These LED units contain advanced drivers which use pulse width modulation to control heat buildup rather than simple voltage regulators which are typically harsh on sensitive electronics and can contribute to early LED failure.

These units automatically sense the temperature of each LED and adjust the energy frequency or "duty cycle" accordingly to maintain heat levels within acceptable ranges. This system in essence flashes current at an extremely fast on and off rate to each LED based upon the LED`s core temperature. This flash rate is too fast to detect with the human eye, but provides precise control of the current flowing to each LED and thus the heat it generates. This allows the LEDs to be driven at up to 100% capacity without overheating or visible loss of light output. The LEDs are always driven at the same voltage but the duty cycle, however, is changed to alter how long the LEDs are actually on or off. The end result is more light with less heat and longer LED life with an average 70% lumen maintenance after 50,000 hours.

Mounting: The LEDWL-STRB-BLUE-1224 is suspended with a U-bracket style trunnion with tension bolt allowing the LED light to be adjusted and then re-tightened to lock the light into any desired position once mounted. A single stainless steel stud protrudes from the bottom of the mount, enabling the operator to install the light using a simple through-hole mount, allowing the unit to be installed anywhere a 1/2-inch hole can be drilled.

Wiring/Power: The LEDWL-STRB-BLUE-1224 LED warning/indicator strobing spotlight is equipped with Deustch connector and a 20` wiring harness. The external power supply is remote mountable. Operators can install the power supply between the light and the control station. The external power supply is designed to be hardwired and operates on voltages ranging from 12-24V DC.

Note: Most Larson Electronics LEDLB, LEDP3W, LEDP10W, LED10W, and LEDP WRE series LED spotlights and floodlights are terminated with a Deutsch IPD / LADD DT04-2P connector. The mating connector plug is DT06-2S. Most LEDLB, LEDP10W and LED10W series lights ship with mating connector as part of a harness or pigtail, depending on the model. Some larger LED lights like the LEDLB-160X2 or LEDLB-200X2 or multiple function LED lights (i.e. high/low beam, modulating, IR/Visible combos) will have different Deutsch connectors.

At Larson Electronics, we do more than meet your lighting needs. We also provide replacement, retrofit, and upgrade parts as well as industrial grade power accessories. Our craftsmen can custom build any lighting system and/or accessories to fit the unique demands of your operation. A commitment to honesty, quality, and dependability has made Larson Electronics a leader in the lighting and electronics business since 1973. Contact us today at 800-369-6671 or message sales@larsonelectronics.com for more information about our custom options tailored to meet your specific industry needs.

REV	DESCRIPTION	DATE
A	PRODUCTION RELEASE	4/22/2025

LEDWL-STRB-BLUE-1224

LARSON ELECTRONICS®

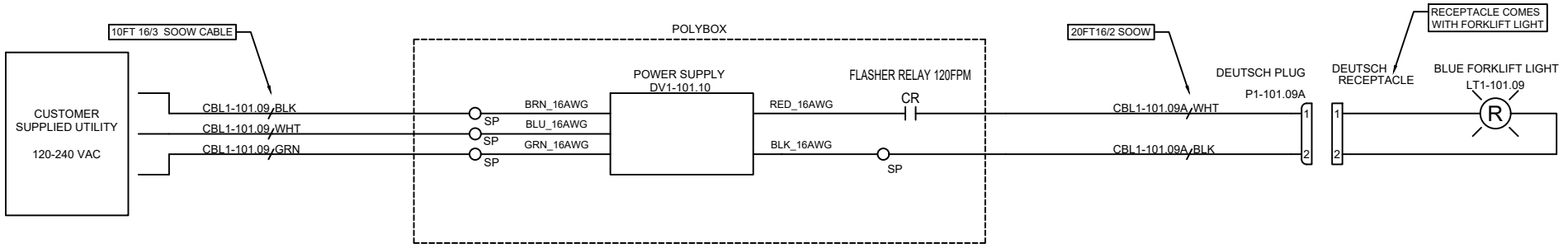

TAGS	QTY	CATALOG	DESCRIPTION
P1-101.09A	1	UNV00005480	DTCH PLUG 2 WAY
CR1-101.09	1	UNV00016015	SOLID STATGE FLASHER
LT1-101.09	1	UNV00005003	BLUE - 4LED Blue forklift Light
DV1-101.10	1	UNV00018001	DCP POWER SUPPLY 100-240VAC/12 VDC,1.0A
CBL1-101.09A	1	UNV00002075	16/2 SOOW CABLE
CBL1-101.09	1	UNV00009083	16/3 SOOW CABLE

LARSON ELECTRONICS
9419 E US HWY 175,
KEMP, TX 75143

TITLE			
LEDWL-STRB-BLUE-1224			
DRAWN BY	DATE	REV	
A.HIRSH	4/22/2025	A	
CHECKED BY	SHEET #	DRAWING #	
S.DESA	1 OF 1	101	









Frequently Asked Questions (FAQ)