Larson Electronics LLC
9419 E US HWY 175, Kemp, TX 75143
Phone: 800.369.6671

www.LarsonElectronics.com
Email: sales@LarsonElectronics.com
Fax: 903.498.3364

HL-8x-SP1154

Boat Mount for HL/RL Series Handheld Spotlights

Product ID: 144414



Larson Electronics LLC manufactures a wide variety of products, including custom built to spec designs. The pictures displayed for this unit are a general representation of form factor for the product line and may not accurately represent this exact configuration in every detail due to custom builds and changes between similar products in our standard catalog. The specifics for this configuration are listed in the specification table and supporting documentation (CAD files, Dimensional Drawing, Name Plate Diagram, Wiring Diagram, etc.). This means that specific details (receptacles, plugs, wires, connections, mounting brackets, external finishes, etc.) may not be accurately represented in images vs specifications. Please review specifications and do not order based solely on images.

Boat Mount for HL/RL Series Handheld Spotlights
This mount is designed to be compatible with existing HL-85, HL-85-HID,, HL-85-10W1, HL-85-3W1, HL-85-LED, RL-85, RL-85-HID, RL-85-10W1, RL-85-3W1, and RL-85-LED series handheld spotlights.
Please Note: HL/RL series handheld spotlight shown in pictures not included. Boat mount only.

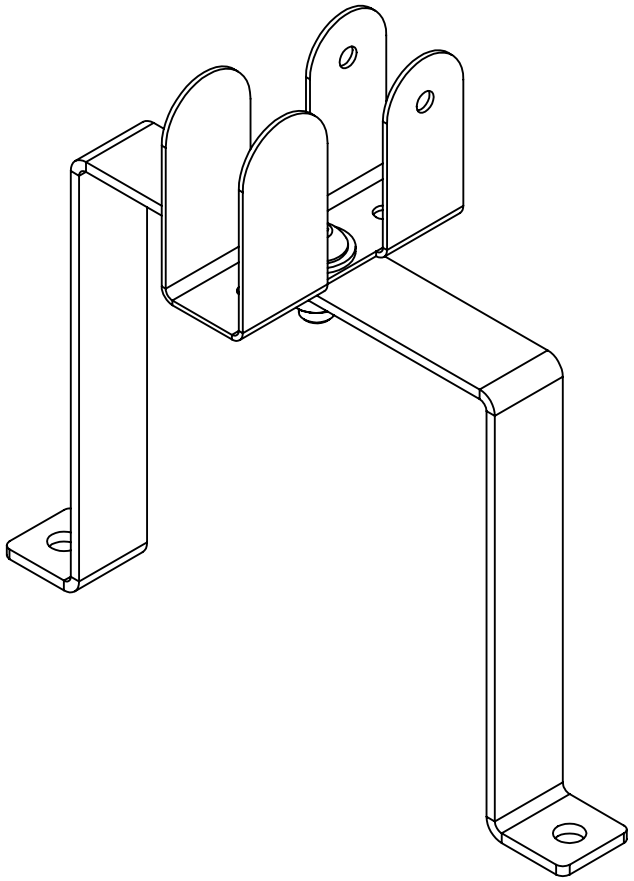

LARSON ELECTRONICS

TITLE:

HL-8x-SP1154

PROPRIETARY AND CONFIDENTIAL
THE INFORMATION CONTAINED IN THIS DRAWING IS THE SOLE PROPERTY OF LARSON ELECTRONICS LLC. ANY REPRODUCTION IN PART OR AS A WHOLE WITHOUT THE WRITTEN PERMISSION OF LARSON ELECTRONICS LLC IS PROHIBITED.

UNLESS OTHERWISE NOTED:

ANGLE:	+/- .5
.X	+/- .02
.XX	+/- .01
.XXX	+/- .005

DIMENSIONS ARE IN INCHES

Quantity	1		DRAWN	LUIS MARTINEZ
MATERIAL			CHECKED	N/A
DO NOT SCALE DRAWING			DATE	04/11/2017

NAME

SIZE	DWG. NO.	REV
A	-	00

SCALE: NTS

5 4 3 2 1

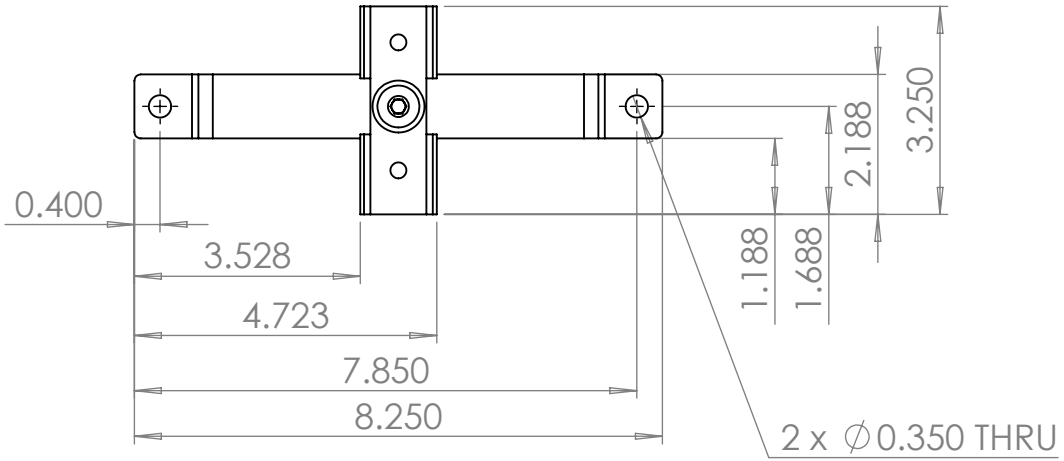

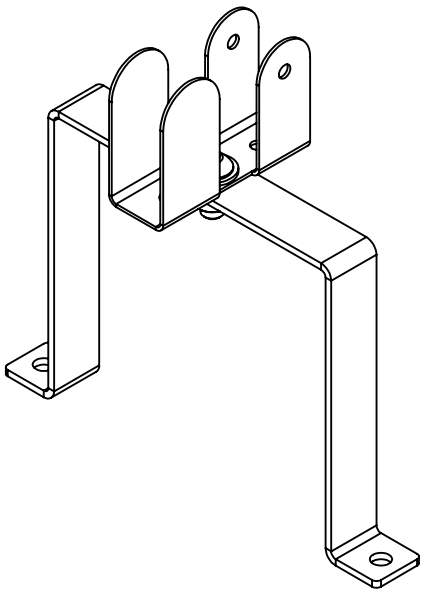

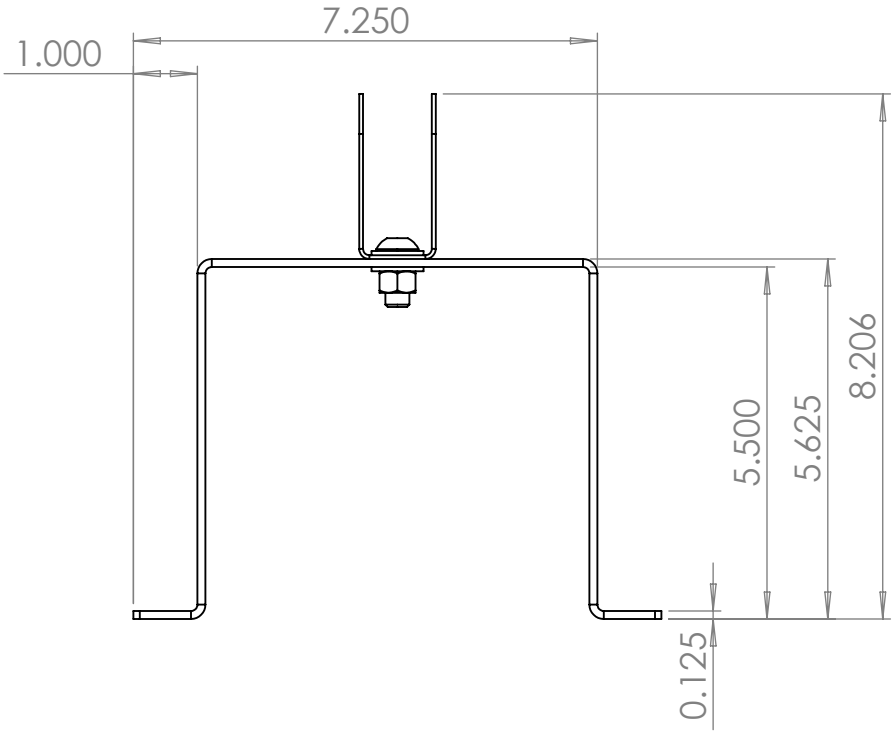

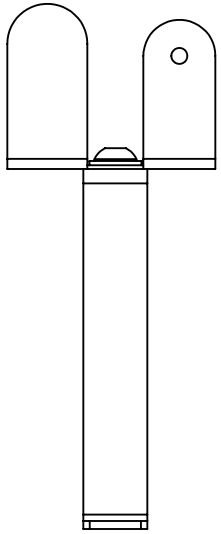

LARSON ELECTRONICS

TITLE:

HL-8x-SP1154

PROPRIETARY AND CONFIDENTIAL
THE INFORMATION CONTAINED IN THIS DRAWING IS THE SOLE PROPERTY OF LARSON ELECTRONICS LLC. ANY REPRODUCTION IN PART OR AS A WHOLE WITHOUT THE WRITTEN PERMISSION OF LARSON ELECTRONICS LLC IS PROHIBITED.

UNLESS OTHERWISE NOTED:
ANGLE: +/- .5
.X +/- .02
.XX +/- .01
.XXX +/- .005

DIMENSIONS ARE IN INCHES			NAME
Quantity	1	DRAWN	LUIS MARTINEZ
MATERIAL		CHECKED	N/A
DO NOT SCALE DRAWING		DATE	04/11/2017

SIZE	DWG. NO.	REV
A	-	00

SCALE: NTS SHEET 2 OF 2

5 4 3 2 1



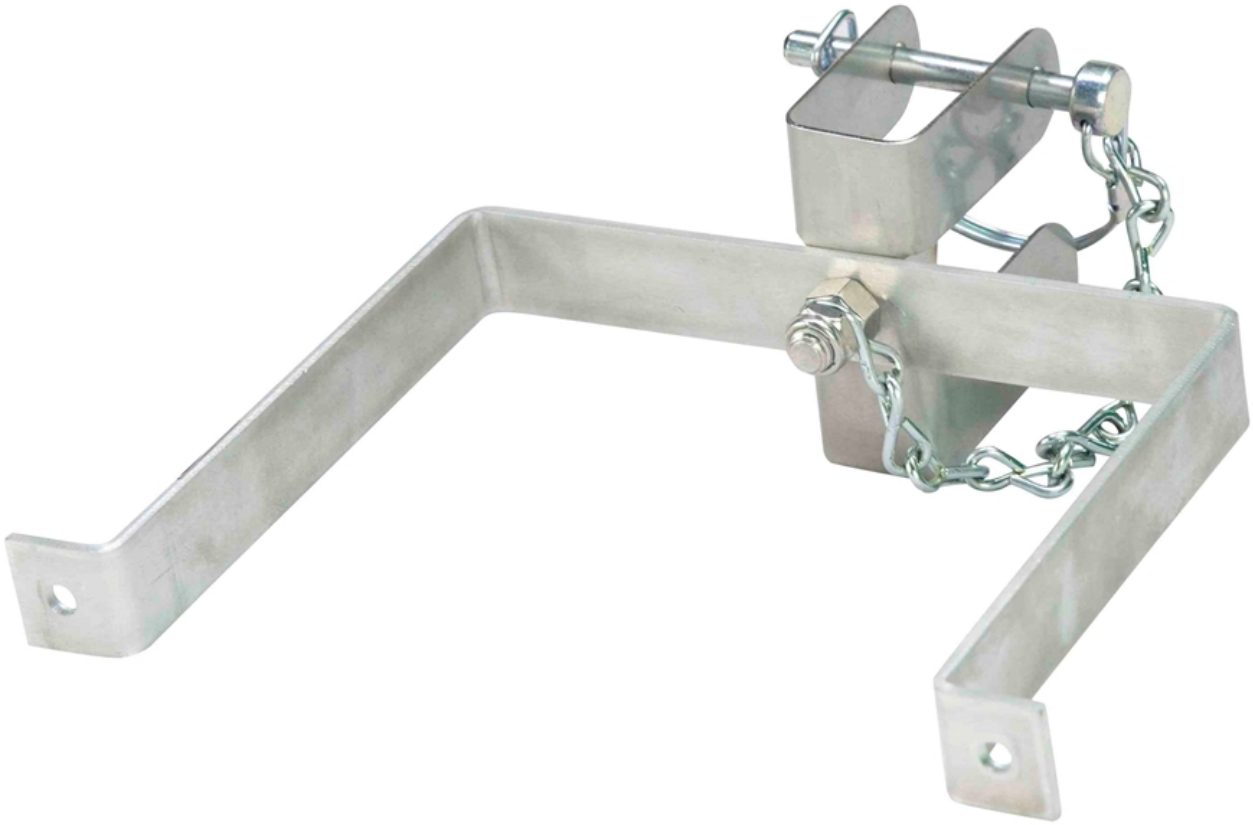

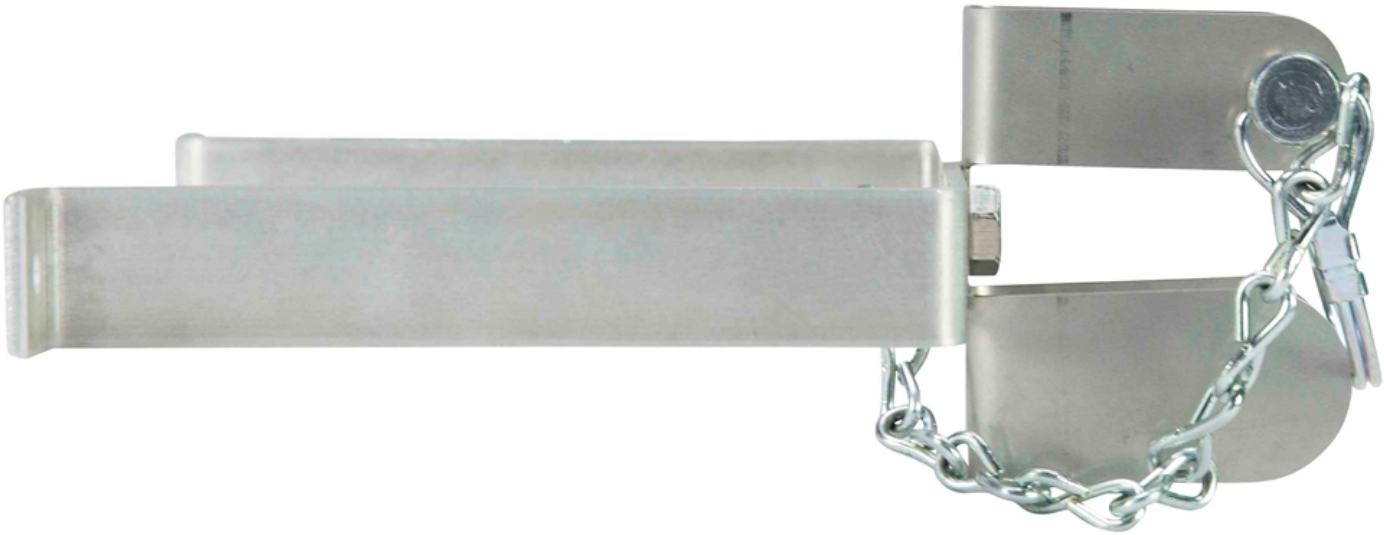


A9
LARSON
ELECTRONICS

Frequently Asked Questions (FAQ)