Larson Electronics LLC
9419 E US HWY 175, Kemp, TX 75143
Phone: 800.369.6671

www.LarsonElectronics.com
Email: sales@LarsonElectronics.com
Fax: 903.765.7664

EPF-HPSM-24-1HP-3P

24" Explosion Proof Fan - 6860 CFM - 1 HP - 230-480V - Class 1 Group D & Class 2 Groups F & G Rated

Product ID: 144272



Image: EPF-HPSM-24-1HP-3P

Larson Electronics LLC manufactures a wide variety of products, including custom built to spec designs. The pictures displayed for this unit are a general representation of form factor for the product line and may not accurately represent this exact configuration in every detail due to custom builds and changes between similar products in our standard catalog. The specifics for this configuration are listed in the specification table and supporting documentation (CAD files, Dimensional Drawing, Name Plate Diagram, Wiring Diagram, etc.). This means that specific details (receptacles, plugs, wires, connections, mounting brackets, external finishes, etc.) may not be accurately represented in images vs specifications. Please review specifications and do not order based solely on images.

EPF-HPSM-24-1HP-3P Explosion Proof High Volume Ventilation Fan
Type: High Pressure High Volume Ventilation Fan
Propeller Dimensions: 24" Diameter
Propeller Material: Spark-Resistant Cast Aluminum
Weight: 79 lbs
Voltage: Multi-Voltage - 230-480V AC 3 Phase
Motor: 1HP Fully Enclosed Explosion Proof
Rotations Per Minutes (RPM): 1750
Peak CFM (@ 0" SP): 6860
Max Sound Levels @ 5`: 35.4 (sones), 79.67 (db)
Max Decibles @ 5`: 80db
Wiring: Hard-Wired via junction box
Mounting: Permanent Mount
Dimensions: 12.25" x 30" x 30"

Ratings/Features:
Listed for United States
Class I, Divisions 1 & 2, Group D
Class II, Divisions 1 & 2, Groups F & G
T3B Temp Rating
Spark-Resistant Propeller
Up To 6860 CFM Air Movement
Rated for Hazardous Environments

Made in the USA

Special Orders - Special Requirements
Contact us for special requirements
Toll Free: 1-800-369-6671
Intl: 1-903-270-1187
Fax: 1-903-765-7664
E-mail: sales@larsonelectronics.com

Made in the USA

The EPF-HPSM-24-1HP-3P from Larson Electronics is a high pressure, high volume explosion proof ventilation fan that operates on 230-480V AC voltage. This high volume explosion proof ventilation fan features a 24" diameter spark resistant cast aluminum

blade that moves air at a rate of up to 6860 cubic feet per minute (CFM) for superior ventilation and airmovement. The EPF-HPSM-24-1HP-3P is powered by a fully enclosed and explosion proof one horsepower motor.

PLEASE NOTE: ANY FREE SHIPPING OFFERS DO NOT APPLY TO THIS PRODUCT

The EPF-HPSM-24-1HP-3P explosion proof fan is rated for Class I Group D and Class II Groups F & G hazardous environments. The 24" diameter propeller on this explosion proof high pressure ventilation fan is constructed from cast aluminum to resist sparking further increasing the safety of the hazardous environment in which the fan is being utilized. This three phase explosion proof ventilation fan has a one horsepower fully enclosed motor that can spin the propeller at a rate of 1750 RPM.

Voltage: The EPF-HPSM-24-1HP-3P explosion proof ventilation fan is multi-voltage capable and can operate on voltages ranging from 230-480V AC.

Wiring: The EPF-HPSM-24-1HP-3P is a hard-wired ventilation fan that should be installed according to national, state and local electrical and mechanical codes.

Applications: Class I Group D and Class II Groups F & G hazardous areas that require ventilation including but not limited to the following: clean rooms, marijuana extraction rooms, laboratory hoods, oil refineries, grain mills, chemical plants, welding shops, chemical storage areas and battery changing areas.

At Larson Electronics, we do more than meet your lighting needs. We also provide replacement, retrofit, and upgrade parts as well as industrial grade power accessories. Our craftsmen can custom build any lighting system and/or accessories to fit the unique demands of your operation. A commitment to honesty, quality, and dependability has made Larson Electronics a leader in the lighting and electronics business since 1973. Contact us today at 800-369-6671 or message sales@larsonelectronics.com for more information about our custom options tailored to meet your specific industry needs.

Made in USA Quality

1. Fully enclosed explosion proof 1HP motor.
2. Spark-resistant cast aluminum 24" diameter propeller.
3. Class I Group D and Class II Groups F & G rated.
4. Multi-voltage capable.
5. Moves up to 6860 cubic feet of air per minute.
6. Fully assembled and ready to install

CFM Static Pressure (SP) Ratings

0" SP - 6860 CFM
2. 1/8" SP - 6560 CFM
3. 1/4" SP - 6240 CFM
4. 3/8" SP - 5900 CFM
5. 1/2" SP - 5426 CFM

Wiring Diagram

WARNING: *DO NOT SERVICE WHILE ENERGIZED!*

EPF-HPSM-24-1HP-3P

Connect the motors of all fans according to the diagrams inside the terminal box cover or on the nameplate. **BE SURE TO CONNECT FOR THE VOLTAGE, FREQUENCY AND PHASE TO BE USED.**

LOW VOLTAGE (2Y)

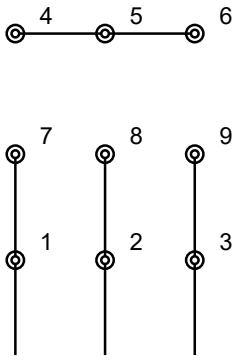

HIGH VOLTAGE (1Y)

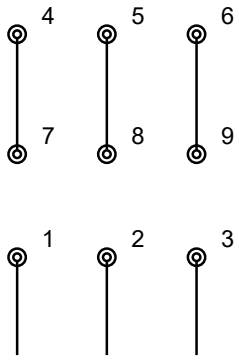

Dual-voltage single phase motors are factory-connected for 230 volt lines. Dual-voltage three-phase motors are factory-connected for 460 volt lines. Provide Nationally Recognized Testing Laboratory recognized electrical overload protection not to exceed 125% of the marked input rating of the fan motor.

LARSON ELECTRONICS LLC • 9419 E US HWY 175 • KEMP, TX 75143
p: 1-800-369-6671 • intl: 903-498-3363 • f: 903-498-3364 • sales@larsonelectronics.com

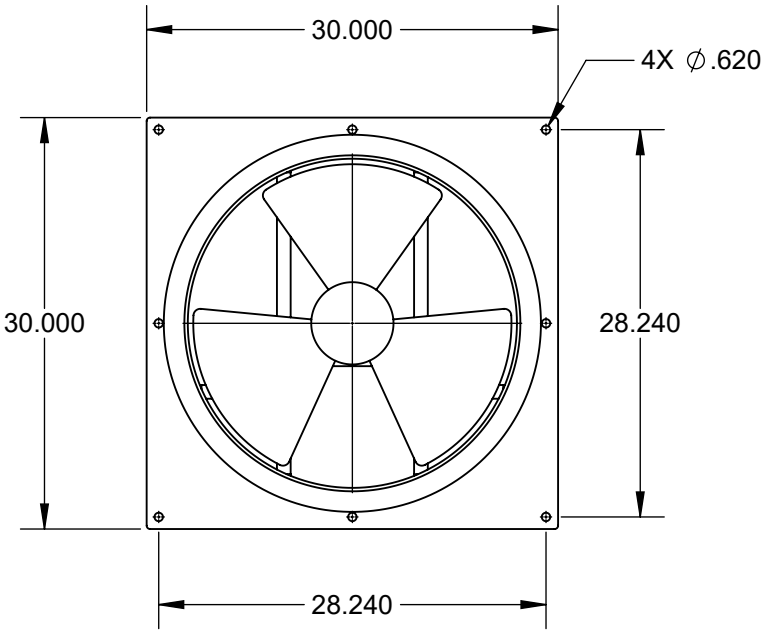

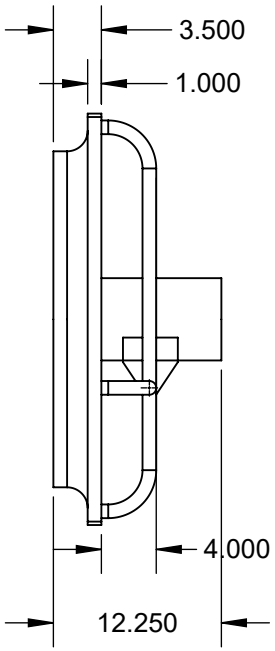

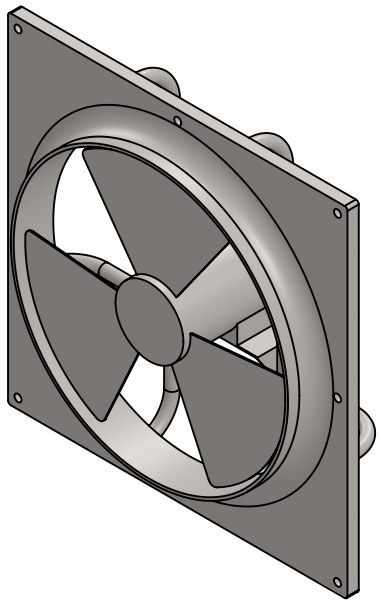

LARSON ELECTRONICS®

PART NUMBER:

EPF-HPSM-24-1HP

SIZE		REV
A		1

DIMENSIONS ARE IN INCHES				
DO NOT SCALE DRAWING	DATE	11/6/2025	SCALE: NTS	SHEET 1 OF 1

PROPRIETARY AND CONFIDENTIAL

THE INFORMATION CONTAINED IN THIS DRAWING IS THE SOLE PROPERTY OF LARSON ELECTRONICS LLC. ANY REPRODUCTION IN PART OR AS A WHOLE WITHOUT THE WRITTEN PERMISSION OF LARSON ELECTRONICS LLC IS PROHIBITED.

Larson Electronics LLC
9419 E US HWY 175, Kemp, TX 75143
Phone: 800.369.6671

www.LarsonElectronics.com
Email: sales@LarsonElectronics.com
Fax: 903.765.7664



Larson Electronics LLC
9419 E US HWY 175, Kemp, TX 75143
Phone: 800.369.6671

www.LarsonElectronics.com
Email: sales@LarsonElectronics.com
Fax: 903.765.7664



Larson Electronics LLC
9419 E US HWY 175, Kemp, TX 75143
Phone: 800.369.6671

www.LarsonElectronics.com
Email: sales@LarsonElectronics.com
Fax: 903.765.7664



Larson Electronics LLC
9419 E US HWY 175, Kemp, TX 75143
Phone: 800.369.6671

www.LarsonElectronics.com
Email: sales@LarsonElectronics.com
Fax: 903.765.7664



Larson Electronics LLC
9419 E US HWY 175, Kemp, TX 75143
Phone: 800.369.6671

www.LarsonElectronics.com
Email: sales@LarsonElectronics.com
Fax: 903.765.7664

Frequently Asked Questions (FAQ)

There are no Faqs