Larson Electronics LLC
9419 E US HWY 175, Kemp, TX 75143
Phone: 800.369.6671

www.LarsonElectronics.com
Email: sales@LarsonElectronics.com
Fax: 903.498.3364

HL-85-LED-CPR

10 Million Candlepower LED Spotlight - 36 Watt - Pistol Grip - 1600 Foot Beam - 3200 Lumens

Product ID: 106205



Larson Electronics LLC manufactures a wide variety of products, including custom built to spec designs. The pictures displayed for this unit are a general representation of form factor for the product line and may not accurately represent this exact configuration in every detail due to custom builds and changes between similar products in our standard catalog. The specifics for this configuration are listed in the specification table and supporting documentation (CAD files, Dimensional Drawing, Name Plate Diagram, Wiring Diagram, etc.). This means that specific details (receptacles, plugs, wires, connections, mounting brackets, external finishes, etc.) may not be accurately represented in images vs specifications. Please review specifications and do not order based solely on images.

HL-85-LED-CPR Handheld Spotlight
Lamp Type: Cree LED
Dimensions: 7.95"L x 2.75"W x 8.37"D
Weight: 1.5 lbs
Voltage: 12/24V DC
Total Watts: 36W
Total Lumens: 3,200
Candlepower: 10 Million
Luminous Efficacy: 88.89 Lm/W
LED Lamp Life Expectancy: 50,000+
Wiring: 16` Coil Cord w/ Cigarette Plug
Cord Options: 16` Cig Coil, 16` Cig Straight, 21` Ring Terminals, 16` Battery Clamps, 16` Flying Leads
Beam Type: Spot
Housing Material: ABS Polymer & Aluminum Alloy
Housing Color: Black
Lens Material: Polycarbonate
Mounting: Handheld

Quick Summary
IP67 Waterproof
Dustproof
Shockproof
Impact/Vibration Resistant Construction
Lightweight
Portable
Continual On/Off Switch
Push Once to Power On, Push Again to Power Off

Special Orders - Special Requirements

Contact us for special requirements
Toll Free: 1-800-369-6671
Intl: 1-214-616-6180
Fax: 1-903-498-3364
E-mail: sales@larsonelectronics.com

The HL-85-LED-CPR super bright handheld 10 million candlepower spotlight from Larson Electronics is lightweight, ultra rugged, and features a comfortable ergonomic design. This unit uses seven high output Cree LEDs and an advanced reflector and lens configuration to generate 3,200 lumens with a beam reach of over 1,600 feet while drawing only 36 watts of power. Equipped with a cigarette plug that operates on 12-24V DC, this IP67 rated waterproof spotlight is ideal for hunting, camping, marine and boating use as well as for first responders and emergency services. The HL-85-LED-CPR features a continual on/off switch that requires one press to stay on and another press to

turn off.

Light Features: The HL-85-LED-CPR super bright handheld spotlight delivers an impressive 3,200 lumens while drawing only 36 watts of energy. With a combination seven high output Cree LEDs and a 5" reflector, this spotlight cuts through the darkness with a beam length of over 1,600 feet. The Cree LED units in this light have been chosen for their high lumen per watt ratio and extreme longevity.

These Cree LEDs generate 56 lumens per watt effective lumen output and have a 70% lumen retention at 50,000 hours, giving them better efficiency and operational life than traditional light sources. The unique shape and shallow contour of the 120mm reflector is paired with a convex lens and inset lens position to efficiently capture and project a focused beam of light while reducing the light spillage and waste that is common with many spotlights. This efficient design also reduces casting, a phenomenon that occurs when wasted light "spills" around the light source. Often times, when surrounded by water, snow or other reflective surfaces, this light spillage prevents the human eye from adjusting properly and seeing objects at distance. With the HL-85-LED-CPR spotlight configuration, 90% of the emitted light is captured and focused, clearly and sharply illuminating objects all the way to the end of the beam reach.

This IP67 rated waterproof spotlight features an ultra-durable ABS shockproof polymer body, an aluminum alloy light head housing, and an impact resistant polycarbonate lens. While the HL-85-LED-CPR is built to withstand rugged use and harsh outdoor conditions, comfort and ease of operation haven`t been sacrificed. This unit is ergonomically designed for balanced and comfortable handling. The 4.5"L x 1.5"D and 5/8 inch thick nylon handle has a no-slip textured surface that ensures a firm grip even in wet conditions. The booted push button is conveniently placed to allow operators easy forefinger access to the switch for quick on/off action.

On/Off Switch Operation: The HL-85-LED-CPR LED handheld spotlight features a continual on/off switch. This means that the spotlight will stay on after a single button press and remain on until the power button is pressed again. Operators simply press the button once and will have a continual source of high-intensity LED light for their illumination needs until the on/off switch is pressed again to turn the light off. There is no need to keep pressure on the on/off switch at all times when light is desired unlike other spotlight models on the market that feature a trigger type switch. This operation of the on/off switch makes the HL-85-LED-CPR an easy to use and convenient source of portable LED light.

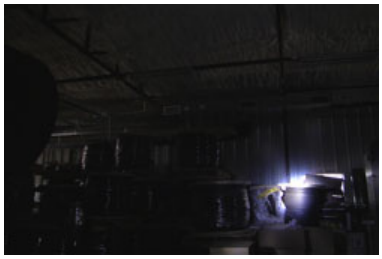

Click Photo to Enlarge

LED Benefits: Unlike gas burning and arc type lamps that have glass bulbs, LEDs have no filaments or fragile housings to break during operation and/or transportation. Instead of heating a small filament or using a combination of gases to produce light, light emitting diodes (LEDs) use semi-conductive materials that illuminate when electric current is applied, providing instant illumination with no warm up or cool down time before re-striking. Because there is no warm up period, this light can be cycled on and off with no reduction in lamp life.

LED lights run at significantly cooler temperatures than traditional metal halide and high pressure sodium lights and contain no harmful gases, vapors, or mercury, making them both safer and more energy efficient. No extra energy is wasted in cooling enclosed work areas due to external heat emissions from bulb type lights, and the operator risks associated with traditional lighting methods, such as accidental burns and exposure to hazardous substances contained in the glass bulbs, are eliminated. In addition, LEDs are also safer for the environment as they are 100% recyclable, which eliminates the need

for costly special disposal services required with traditional gas burning and arc type lamps.
Cree Specific: This lamp uses Cree LED units that have been chosen for their high lumen per watt ratio and extreme longevity. These Cree LEDs generate a robust 55.5 lumens per watt effective lumen output and have a 70% lumen retention at 50,000 hours, giving them better efficiency and operational life than traditional light sources.



16ft Coil Cord w/Cigarette Plug



21ft Cord with Ring Terminals



16ft Cord w/Battery Clamps



16ft Cord with Cigarette Plug

Click Images to Enlarge

Wiring/Plug: Each light comes with a detachable 16 foot coil cord with cigarette plug. The cord is detached via a weatherproof, 2 pin Deutsch connector which easily and securely attaches and detaches the coil cord from the spotlight. Other cords, including 21 foot cords with ring terminals (C-21RT), 16 foot cord with spring battery clamps (alligator clips) (C-16BC) and a 16 foot straight cord with cigarette plug (C-16CP) are available. This light can be ordered in either 12 volt or 24 volt configuration, allowing it to be used with any vehicle or ATV equipped with a cigarette plug. Choose voltage below when ordering.
Applications: Hunting, Marine & Boating, Camping, Emergency Services, First Responders
At Larson Electronics, we do more than meet your lighting needs. We also provide replacement, retrofit, and upgrade parts as well as industrial grade power accessories. Our craftsmen can custom build any lighting system and/or accessories to fit the unique demands of your operation. A commitment to honesty, quality, and dependability has made Larson Electronics a leader in the lighting and electronics business since 1973. Contact us today at 800-369-6671 or message sales@larsonelectronics.com for more information about our custom options tailored to meet your specific industry needs.

High Quality Features

1. Low power consumption.
2. Instant on/off operation.
3. ABS shockproof polymer body.
4. Aluminum alloy light head housing.
5. Retains 70% lumen output after 50,000 operating hours.
6. Ergonomic nylon handle.
7. Built for Toughness and Durability
8. Low profile - Lightweight
9. 3,200 Lumen output from only 36 watts.

Superior LED Benefits

1. 50,000 hour lifespan.
2. Can SAVE 50% or more on energy.
3. Qualifies retrofit projects for financial incentives, including utility rebates, tax credits and energy loan programs.
4. Reduces energy use and prolongs life-spans of peripheral cooling units (A/C, refrigeration)
5. 100% recyclable.
6. No toxins-lead, mercury.
7. No UV light, infrared radiation or CO2 emissions.
8. Qualifies buildings for LED and other sustainable business certifications.
9. Bright, even light maintains consistent color over time.
10. Instant on/off - No flickering, delays or buzzing.
11. Very good color rendering.
12. Vibration/impact resistant.
13. Significantly cooler operation.
14. Less frequent outages, higher output improves workplace safety.

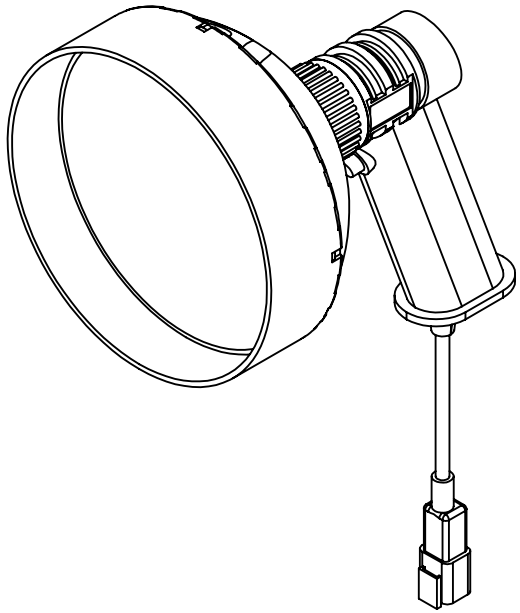

LARSON ELECTRONICS

TITLE:

HL-85-LED-CPR

PROPRIETARY AND CONFIDENTIAL
THE INFORMATION CONTAINED IN THIS DRAWING IS THE SOLE PROPERTY OF LARSON ELECTRONICS LLC. ANY REPRODUCTION IN PART OR AS A WHOLE WITHOUT THE WRITTEN PERMISSION OF LARSON ELECTRONICS LLC IS PROHIBITED.

		NAME
	DRAWN	Luis Martinez
DIMENSIONS ARE IN INCHES	CHECKED	N/A
DO NOT SCALE DRAWING	DATE	11/27/2017

SIZE	DWG. NO.	REV
A		00

SCALE: NTS

5 4 3 2 1

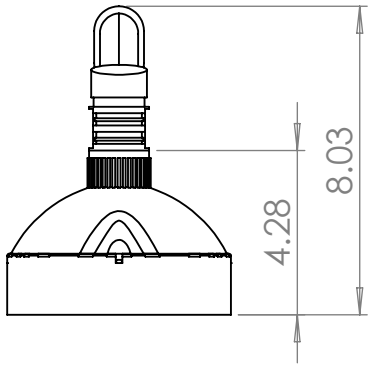

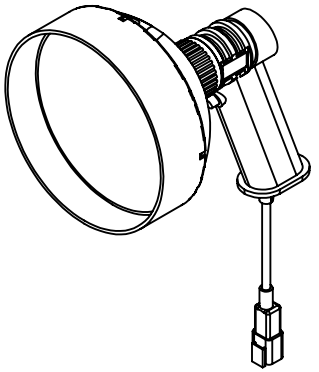

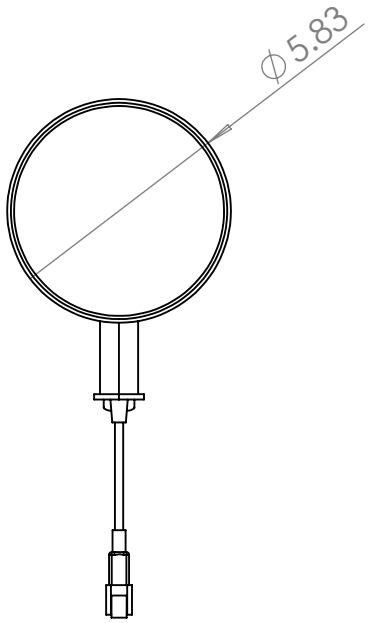

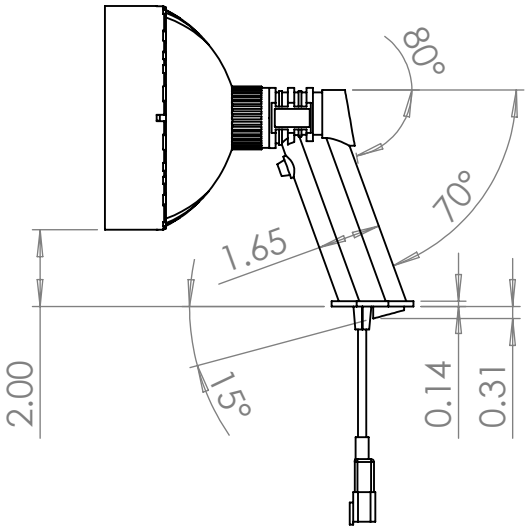

LARSON ELECTRONICS

TITLE:

HL-85-LED-CPR

PROPRIETARY AND CONFIDENTIAL
THE INFORMATION CONTAINED IN THIS DRAWING IS THE SOLE PROPERTY OF LARSON ELECTRONICS LLC. ANY REPRODUCTION IN PART OR AS A WHOLE WITHOUT THE WRITTEN PERMISSION OF LARSON ELECTRONICS LLC IS PROHIBITED.

		NAME
	DRAWN	Luis Martinez
DIMENSIONS ARE IN INCHES	CHECKED	N/A
DO NOT SCALE DRAWING	DATE	11/27/2017

SIZE	DWG. NO.	REV
A		00

SCALE: NTS

5 4 3 2 1

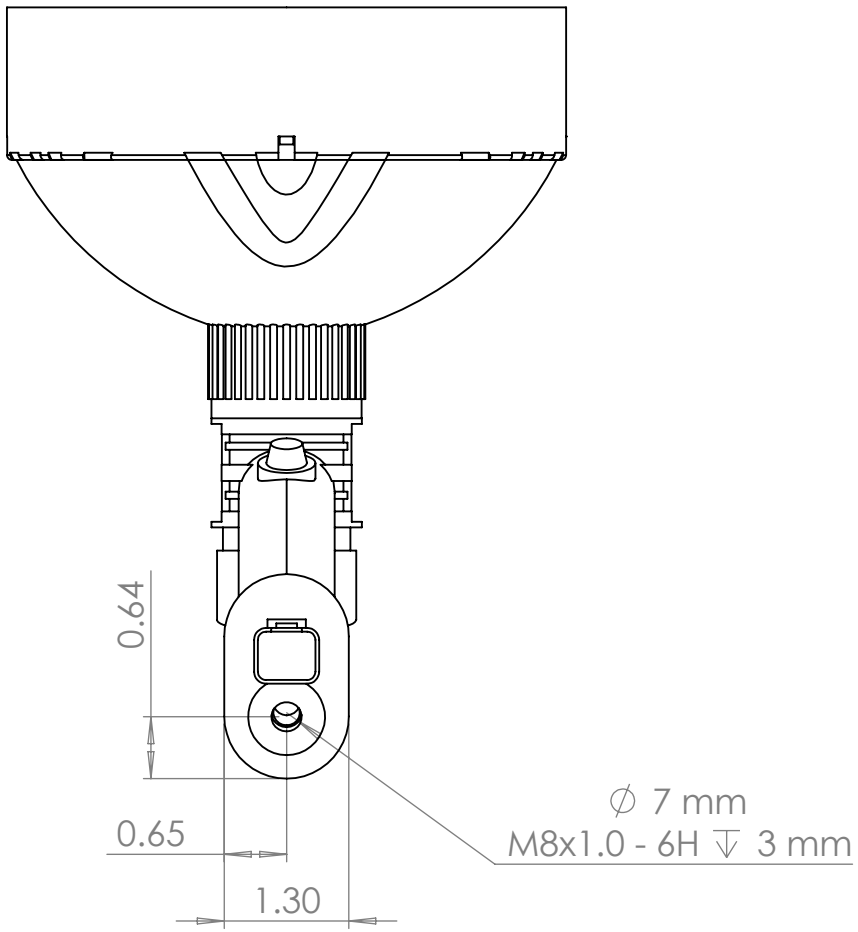

LARSON ELECTRONICS

TITLE:

HL-85-LED-CPR

PROPRIETARY AND CONFIDENTIAL
THE INFORMATION CONTAINED IN THIS DRAWING IS THE SOLE PROPERTY OF LARSON ELECTRONICS LLC. ANY REPRODUCTION IN PART OR AS A WHOLE WITHOUT THE WRITTEN PERMISSION OF LARSON ELECTRONICS LLC IS PROHIBITED.

		NAME
	DRAWN	Luis Martinez
DIMENSIONS ARE IN INCHES	CHECKED	N/A
DO NOT SCALE DRAWING	DATE	11/27/2017

SIZE	DWG. NO.	REV
A		00

SCALE: NTS

5 4 3 2 1









Frequently Asked Questions (FAQ)