Larson Electronics LLC
9419 E US HWY 175, Kemp, TX 75143
Phone: 800.369.6671

www.LarsonElectronics.com
Email: sales@LarsonElectronics.com
Fax: 903.765.7664

EPJ-3-ALU

Explosion Proof Junction Box - Class I, II, III - T-Style, 3 Ports - Powder Coating

Product ID: 105869



Image: EPJ-3-ALU

Larson Electronics LLC manufactures a wide variety of products, including custom built to spec designs. The pictures displayed for this unit are a general representation of form factor for the product line and may not accurately represent this exact configuration in every detail due to custom builds and changes between similar products in our standard catalog. The specifics for this configuration are listed in the specification table and supporting documentation (CAD files, Dimensional Drawing, Name Plate Diagram, Wiring Diagram, etc.). This means that specific details (receptacles, plugs, wires, connections, mounting brackets, external finishes, etc.) may not be accurately represented in images vs specifications. Please review specifications and do not order based solely on images.

EPJ-3-ALU Explosion Proof Junction Box
Listing: NRTL Listed for United States, Canada
Dimensions: 4.25" x 6.25" x 6"
Cover Opening: 2 11/16”
Weight: 1.83 lbs
Volume: 19 cu. in.
Ports: (3)
Temperature Rating: T6
Material: Copper-free Aluminum
Finish: Electrostatically Applied Powder Coating
Hub Size: 3/4" NPT

Ratings
Class I, Divisions 1 & 2 Group C, D
Class 1, Zone 1 IIB, IIA
Class II, Divisions 1 & 2 Group E, F, G
Class III
Type 4, 4X

Special Orders - Special Requirements
Contact us for special requirements
Toll Free: 1-800-369-6671
Intl: 1-903-270-1187
Fax: 1-903-765-7664
E-mail: sales@larsonelectronics.com

The Larson Electronics EPJ-3-ALU Explosion Proof Junction Box is designed for use in Class I, II and III rated facilities. This device contains three ports and copper-free aluminum construction with 3/4" NPT hubs. An electrostatically applied powder coating helps the junction box withstand corrosive substances during use.

The EPJ-3-ALU provides protection for conduits and access to electrical components in combustible locations. This 3-port unit carries a T6 temperature rating and offers 19 cubic inches of volume. The junction box is constructed of copper-free aluminum with an

electrostatically applied powder coating for resistance to corrosion and rugged outdoor elements. This Type 4/4X unit is offered with 3/4" NPT threaded hubs.

Suggested Applications: Manufacturing, Industrial, Warehouse, Lighting, Lighting, Wet areas or Locations Where Combustible Dust is Present.

At Larson Electronics, we do more than meet your lighting needs. We also provide replacement, retrofit, and upgrade parts as well as industrial grade power accessories. Our craftsmen can custom build any lighting system and/or accessories to fit the unique demands of your operation. A commitment to honesty, quality, and dependability has made Larson Electronics a leader in the lighting and electronics business since 1973. Contact us today at 800-369-6671 or message sales@larsonelectronics.com for more information about our custom options tailored to meet your specific industry needs.

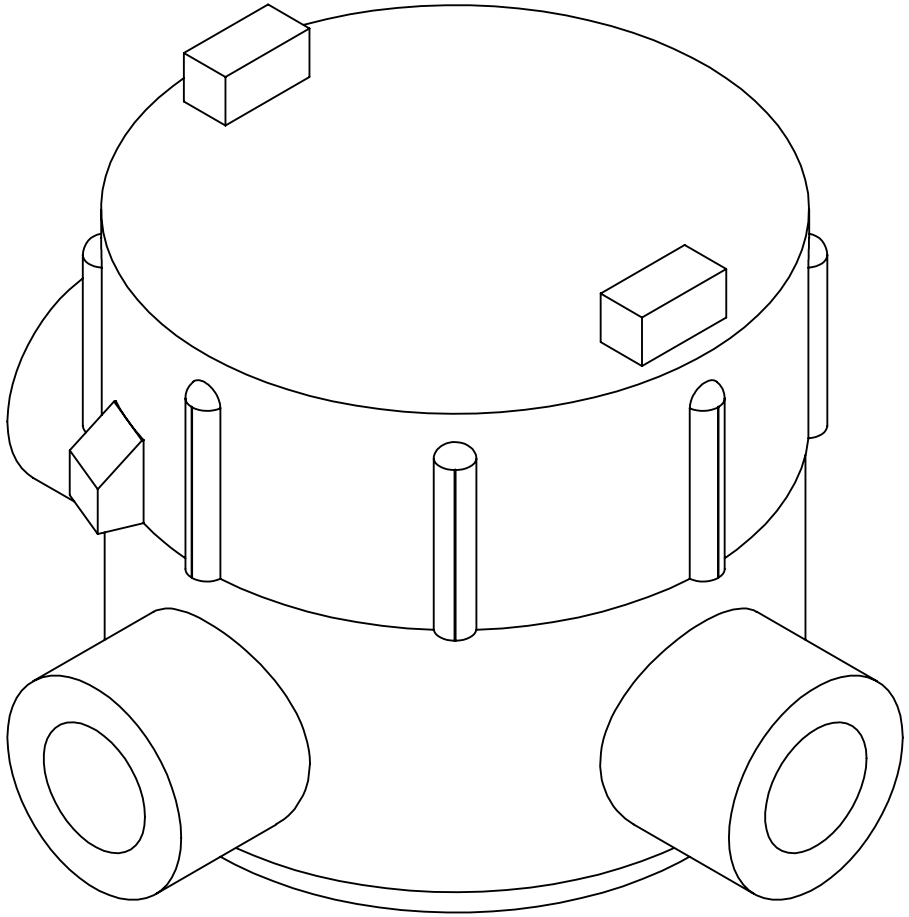

LARSON ELECTRONICS

TITLE:

EPJ-3-ALU

PROPRIETARY AND CONFIDENTIAL
THE INFORMATION CONTAINED IN THIS DRAWING IS THE SOLE PROPERTY OF LARSON ELECTRONICS LLC. ANY REPRODUCTION IN PART OR AS A WHOLE WITHOUT THE WRITTEN PERMISSION OF LARSON ELECTRONICS LLC IS PROHIBITED.

		NAME
	DRAWN	Luis Martinez
DIMENSIONS ARE IN INCHES	CHECKED	N/A
DO NOT SCALE DRAWING	DATE	10/06/2017

SIZE	DWG. NO.	REV
A		00

SCALE: NTS

SHEET 1 OF 3

5 4 3 2 1

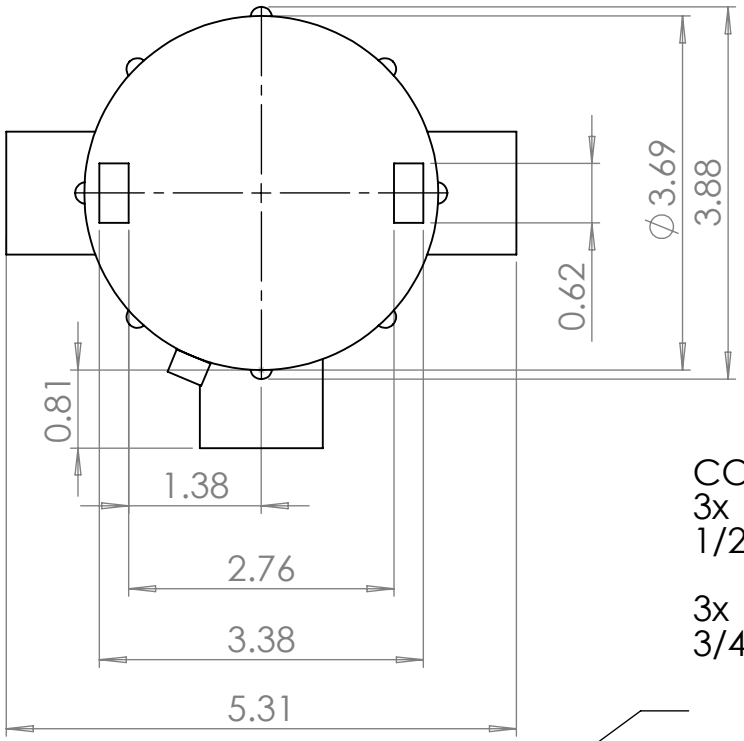

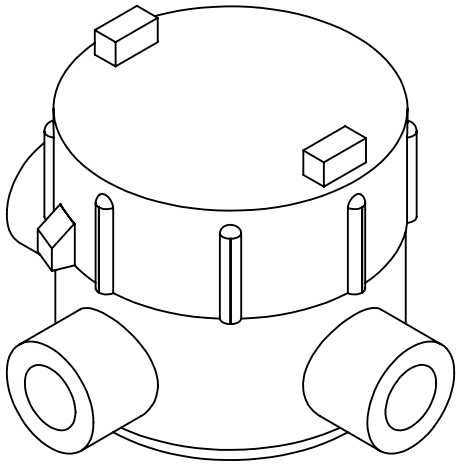

COMES IN HOLE SIZES:
3x ∅ 0.72 THRU
1/2-14 NPT ↧ 0.75
-OR-
3x ∅ 0.92 THRU
3/4-14 NPT ↧ 0.75

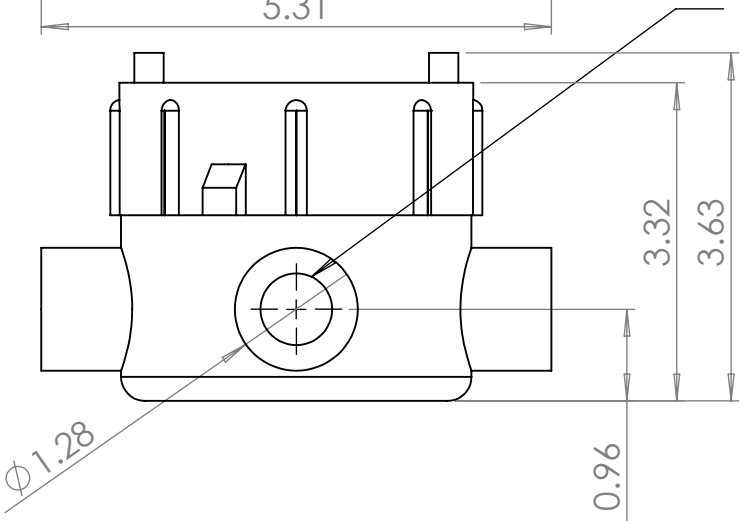

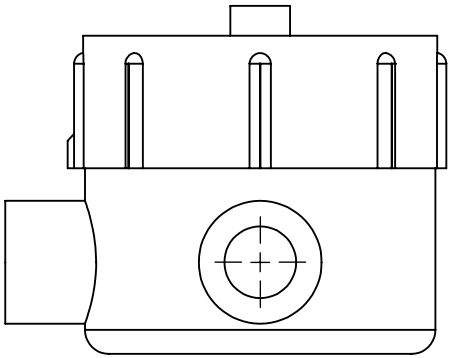

LARSON ELECTRONICS

TITLE:

EPJ-3-ALU

PROPRIETARY AND CONFIDENTIAL
THE INFORMATION CONTAINED IN THIS DRAWING IS THE SOLE PROPERTY OF LARSON ELECTRONICS LLC. ANY REPRODUCTION IN PART OR AS A WHOLE WITHOUT THE WRITTEN PERMISSION OF LARSON ELECTRONICS LLC IS PROHIBITED.

		NAME
	DRAWN	Luis Martinez
DIMENSIONS ARE IN INCHES	CHECKED	N/A
DO NOT SCALE DRAWING	DATE	10/06/2017

SIZE	DWG. NO.	REV
A		00

SCALE: NTS

SHEET 2 OF 3

5 4 3 2 1

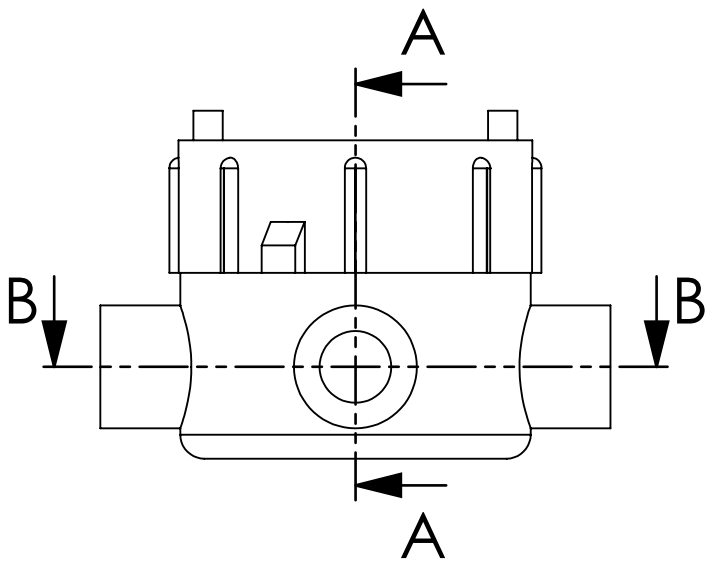

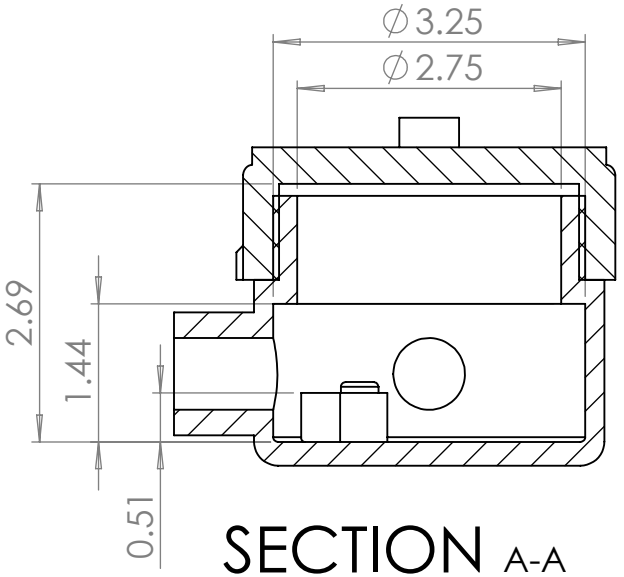

SECTION A-A

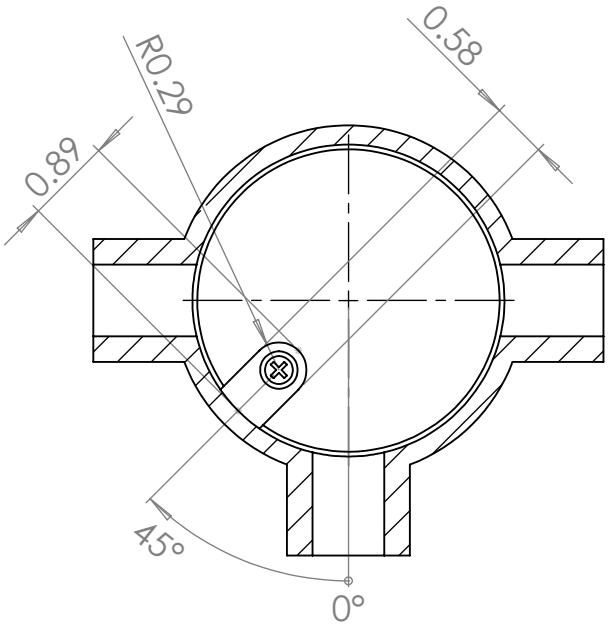

SECTION B-B

LARSON ELECTRONICS

TITLE:

EPJ-3-ALU

PROPRIETARY AND CONFIDENTIAL
THE INFORMATION CONTAINED IN THIS DRAWING IS THE SOLE PROPERTY OF LARSON ELECTRONICS LLC. ANY REPRODUCTION IN PART OR AS A WHOLE WITHOUT THE WRITTEN PERMISSION OF LARSON ELECTRONICS LLC IS PROHIBITED.

		NAME
	DRAWN	Luis Martinez
DIMENSIONS ARE IN INCHES	CHECKED	N/A
DO NOT SCALE DRAWING	DATE	10/06/2017

SIZE	DWG. NO.	REV
A		00

SCALE: NTS

SHEET 3 OF 3

5 4 3 2 1

Larson Electronics LLC
9419 E US HWY 175, Kemp, TX 75143
Phone: 800.369.6671

www.LarsonElectronics.com
Email: sales@LarsonElectronics.com
Fax: 903.765.7664



Larson Electronics LLC
9419 E US HWY 175, Kemp, TX 75143
Phone: 800.369.6671

www.LarsonElectronics.com
Email: sales@LarsonElectronics.com
Fax: 903.765.7664



Larson Electronics LLC
9419 E US HWY 175, Kemp, TX 75143
Phone: 800.369.6671

www.LarsonElectronics.com
Email: sales@LarsonElectronics.com
Fax: 903.765.7664



Larson Electronics LLC
9419 E US HWY 175, Kemp, TX 75143
Phone: 800.369.6671

www.LarsonElectronics.com
Email: sales@LarsonElectronics.com
Fax: 903.765.7664



Material Safety Data Sheet

To Whom It May Concern,

The Larson Electronics LLC EPJ industrial line of junction boxes for hazardous locations are considered "ARTICLES" under 29 CFR 1910-1200, the OSHA Hazard Communication Standard, and do not require a Material Safety Data Sheet (MSDS). This document does not expire.

Articles are specifically exempt from the regulations of this standard. OSHA defines an article as follows:

1910-1200(c) – Article means a manufactured item other than a fluid or particle:

i. Which is formed to a specific shape or design during manufacture;
ii. Which has end use function(s) dependent in whole or in part upon its shape or design during end use; and
iii. Which under normal conditions does not release more than very small quantities.

Regards,

Ray Smith

Ray Smith
Larson Electronics, LLC.

LARSON ELECTRONICS LLC • 9419 E US HWY 175 • KEMP, TX 75143
p: 1-800-369-6671 • intl: 903-498-3363 • f: 903-498-3364 • sales@larsonelectronics.com

Larson Electronics LLC
9419 E US HWY 175, Kemp, TX 75143
Phone: 800.369.6671

www.LarsonElectronics.com
Email: sales@LarsonElectronics.com
Fax: 903.765.7664

Frequently Asked Questions (FAQ)

There are no Faqs