Larson Electronics LLC
9419 E US HWY 175, Kemp, TX 75143
Phone: 800.369.6671

www.LarsonElectronics.com
Email: sales@LarsonElectronics.com
Fax: 903.498.3364

EPF-E16-4450-ND

Electric Explosion Proof Box Fan / Blower - 4450 CFM - 16 inch - Class 1 Division 1 (No Duct)

Product ID: 105292



Larson Electronics LLC manufactures a wide variety of products, including custom built to spec designs. The pictures displayed for this unit are a general representation of form factor for the product line and may not accurately represent this exact configuration in every detail due to custom builds and changes between similar products in our standard catalog. The specifics for this configuration are listed in the specification table and supporting documentation (CAD files, Dimensional Drawing, Name Plate Diagram, Wiring Diagram, etc.). This means that specific details (receptacles, plugs, wires, connections, mounting brackets, external finishes, etc.) may not be accurately represented in images vs specifications. Please review specifications and do not order based solely on images.

EPF-E16-4450-ND Explosion Proof Fan/Blower
Dimensions: 19"W x 18"H x 12"D
Weight: 61 lbs.
Noise Level : 90 Db
Motor: 1.5 HP, 1.1 Kw
Voltage: 115V
Duct: Not Included
Horsepower: 1.5 (1.1kw)
Inrush amps (Start): 80A
Continuous Amps (Run): 15A
Fan Type: Box Fan/Blower
CFM Delivery : 4450+
Ambient Operating Temp: -20 to 180 Degrees Fahrenheit
Wiring: 30 Foot Cord, 15 amp, 5-15 Exp Proof Twist-lock Plug OR 20 amp 6-20 for 220V
Click here to see the airflow curve chart for this fan.

Ratings/Approvals
Class I, Divisions 1 & 2, Group D
Class II, Divisions 1 & 2, Groups E, F and G
ATEX II 2 G EX d IIB T6
T6 Temperature Rating

Special Orders - Special Requirements
Contact us for special requirements

Toll Free: 1-800-369-6671
Intl: 1-903-270-1187
Fax: 1-903-498-3364
E-mail: sales@larsonelectronics.com

Made in the USA

The Larson Electronics EPF-E16-4450-ND Explosion Proof Box Fan / Blower safely and effectively redirects stale air from hazardous location areas. This explosion proof blower meets UL and ATEX standards for hazardous locations and provides high 4450+ CFM output for effective airflow in larger spaces.

*****Please Note: Any free shipping offers do not apply to explosion proof fans*****

This portable, electric explosion proof blower (exhaust fan) is suitable for confined

spaces and is approved to UL and ATEX safety standards for hazardous locations. This fan features a high efficiency 1.5 hp motor which is fully encapsulated and a precision balanced, non sparking aluminum blower blade for high output and protection against accidental ignitions. This fan has 16 inch intake and exhaust flanges and produces over 4,450 CFM of air output for excellent movement of air in large areas.
Other features include a light weight/high strength, anti-static glass reinforced ABS housing that is corrosion proof and chemical resistant with an IP65 rated and rain tested switch enclosure. This box blower/fan operates on standard 115 VAC with an 18 amp initial draw and 5 amp constant draw from the 1.5 horsepower motor after startup. Included with this unit is 30 feet of cord fitted with a 15 amp, 5-15 explosion proof twist-lock plug OR 20 amp, 6-20 explosion proof plug for 220V model.
Note on Explosion Proof Fans: Can be used as an intake and an exhaust fan.



Features

- 1.5 HP 1.1 kW electric motor, 115 VAC - 18 amps start and 5 amps run
- 90 dB noise level
- 16 inch intake and exhaust flange
- 4450+ cfm free air delivery (3180 CFM with 90 degree bend with 15` duct)
- Approved for Class I Group D and Class II Groups E, F, G
- Aluminum non-sparking blower blade is precision balanced
- IP65 rain tested switch enclosure
- High strength, anti-static glass reinforced ABS housing is lightweight, corrosion proof and chemical resistant
- Pre-Wired With 30 Ft. Cord and a 15 amp explosion proof twist-lock plug, OR 20 amp plug for 220V
- Standard with a 15 amp explosion proof plug, OR 20 amp explosion proof plug for 220V

Wiring Diagram

WARNING: *DO NOT SERVICE WHILE ENERGIZED!*

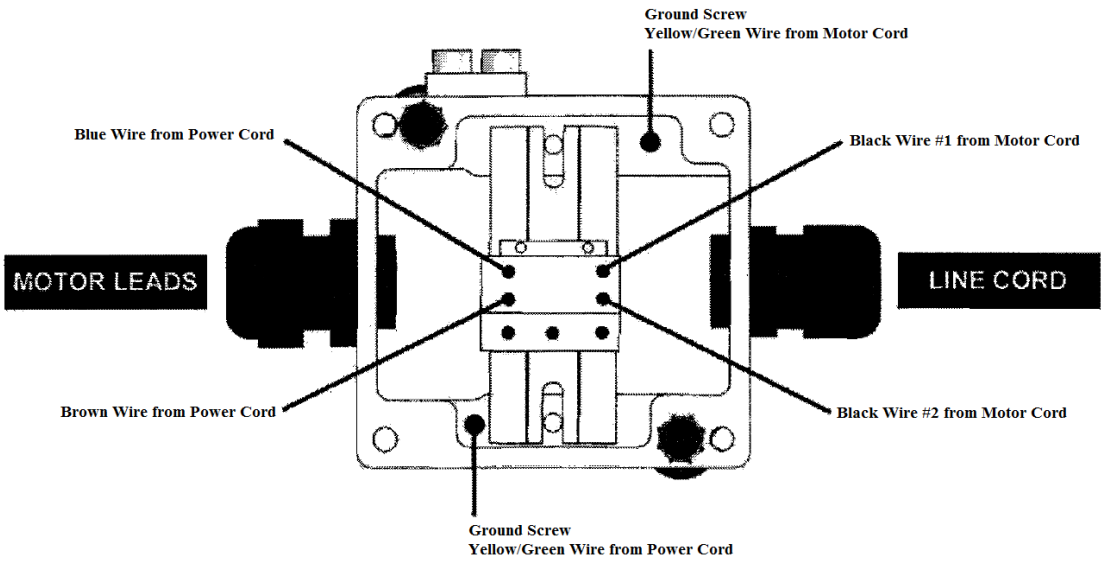

LARSON ELECTRONICS LLC • 9419 E US HWY 175 • KEMP, TX 75143
p: 1-800-369-6671 • intl: 903-498-3363 • f: 903-498-3364 • sales@larsonelectronics.com

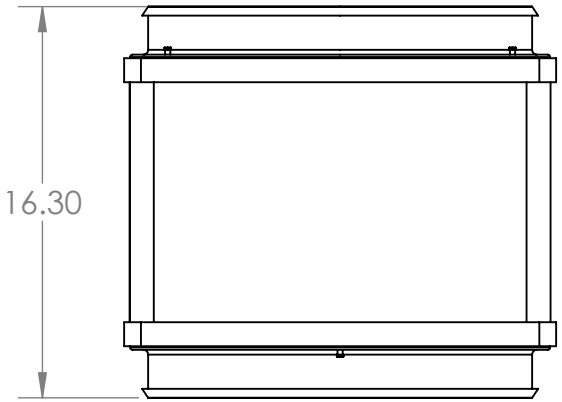

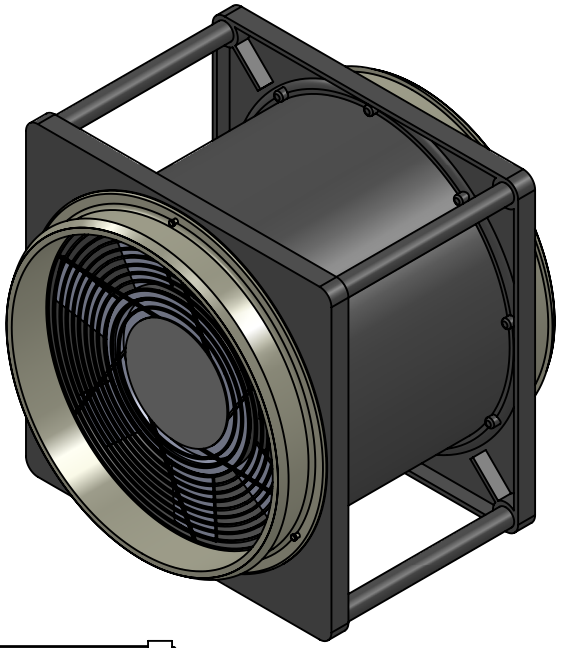

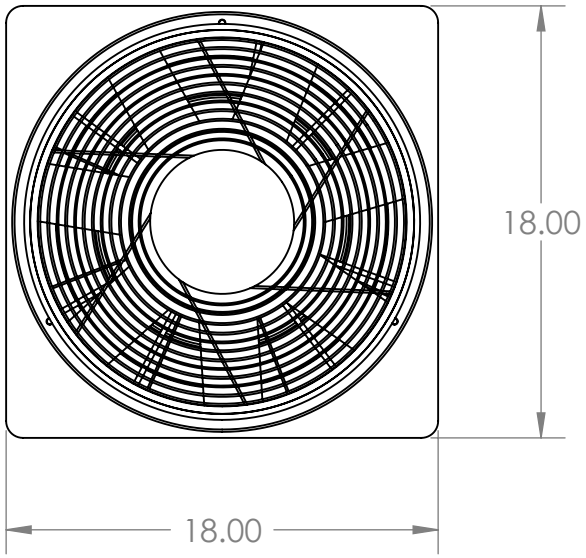

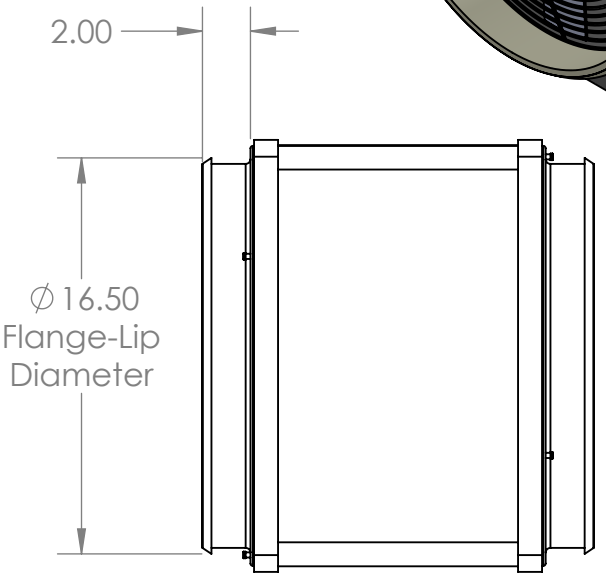

LARSON ELECTRONICS®

TITLE:

EPF-E16-4450

PROPRIETARY AND CONFIDENTIAL
THE INFORMATION CONTAINED IN THIS DRAWING IS THE SOLE PROPERTY OF LARSON ELECTRONICS LLC. ANY REPRODUCTION IN PART OR AS A WHOLE WITHOUT THE WRITTEN PERMISSION OF LARSON ELECTRONICS LLC IS PROHIBITED.

		NAME
DIMENSIONS ARE IN INCHES	DRAWN	Clint Thompson
MATERIAL Mixed	CHECKED	N/A
DO NOT SCALE DRAWING		

SIZE	DWG. NO.	REV
A	A	

SCALE: NTS | SHEET 1 OF 1

5 4 3 2 1







Frequently Asked Questions (FAQ)