Larson Electronics LLC
9419 E US HWY 175, Kemp, TX 75143
Phone: 800.369.6671

www.LarsonElectronics.com
Email: sales@LarsonElectronics.com
Fax: 903.765.7664

TPM-LED-L2X4-25CC-1227

24 Watt Portable LED Telescoping Light Pole - Extends 3.5' to 8.' - 120-277VAC or 9-42VDC

Product ID: 104843



Image: TPM-LED-L2X4-25CC-1227

Larson Electronics LLC manufactures a wide variety of products, including custom built to spec designs. The pictures displayed for this unit are a general representation of form factor for the product line and may not accurately represent this exact configuration in every detail due to custom builds and changes between similar products in our standard catalog. The specifics for this configuration are listed in the specification table and supporting documentation (CAD files, Dimensional Drawing, Name Plate Diagram, Wiring Diagram, etc.). This means that specific details (receptacles, plugs, wires, connections, mounting brackets, external finishes, etc.) may not be accurately represented in images vs specifications. Please review specifications and do not order based solely on images.

TPM-LED-L2X4-25CC-1227 LED Light Tower
Lamp Type: 2X LED Light Bars
Dimensions: Telescoping- 3.5` to 10`
Total Watts: 24
Lumens: 1,440
Voltage: 9-32VDC
Amps: 0.2 @ 120V AC, 2 @ 12VDC
Mounting: Heavy Duty Aluminum Telescoping Light Tower
Lighting Configuration:: 35° Flood or 10° Spot
LED Light Color: 6000K
LED Life Expectancy: 50,000 Hours
Wiring: 25 Foot straight cord w/ transformer, 16 foot Coil Cord w/ Cigarette Plug
Unit Weight: 22lbs Total
Spot Beam: 90`L x 70`W

TPM-LED-L2X4-25CC-1227 Features
IP68 Rated Weatherproof & Waterproof
Adjustable Tripod Extends 3.5` to 10`
Multi-Voltage 9-32 VDC
Low Amp Draw
Long 50,000 Hour LED Life
CE Certified

Special Orders - Special Requirements
Contact us for special requirements
Toll Free: 1-800-369-6671
Fax: 1-903-765-7664
E-mail: sales@larsonelectronics.com

3 year warranty replacement on this LED light. After 30 days, the customer ships the failed LED light and/or LED bulb to Larson Electronics at their expense. If the failure is a manufacturer defect, we will ship a new replacement to the customer. If failure occurs within 30 days of receipt, Larson Electronics will provide a return label via email to the customer. When the failed light is returned, Larson Electronics will ship a new replacement.

Buy American Compliant

Larson Electronics LLC
9419 E US HWY 175, Kemp, TX 75143
Phone: 800.369.6671

www.LarsonElectronics.com
Email: sales@LarsonElectronics.com
Fax: 903.765.7664

The Larson Electronics TPM-LED-L2X4-25CC-1227 Temporary Fixed Mount Dual LED Light consists of two 12 watt LED light heads mounted atop an aluminum pole that extends from 3.5 feet to 8 feet and produces 1,440 lumens that can illuminate an area over 90`L x 70`W. The heavy duty aluminum tripod mount provides the ability to easily and quickly deploy.

This dual LED light pole contains two LED light heads that produce 720 lumens each while using 12 watts at 1 amp, for a combined a total of 1,440 lumens at 24 watts drawing 2 amps on a 12V system or 0.2 amps on a 120V system. Each LED light head contains four Edison Edixeon® Emitters producing 180 lumens each combined with high purity 10 degree optics to produce a tightly focused spot beam with limited spread or light spillage. We also offer optional floodlight versions with 35 degree optics to produce a wider beam spread and more light over a larger area nearer the fixture, making flood versions ideal for use as work and area lights.



Fully taken apart for easy transportation

Click Photo to Enlarge



25FT Straight Cord

Click Photo to Enlarge



In-line transformer 120-277 VAC

Click Photo to Enlarge

These LED lights are waterproof and have IP68 rated construction that is designed to withstand demanding environmental and operating conditions. These units can withstand frigid temperatures, are waterproof to three meters, and resist the ingress of dust, dirt and humidity. The housings on these units are formed from cast aluminum and the lenses are unbreakable polycarbonate. The Edison Edixeon® LED Emitters offer high resistance to shocks and vibrations and are rated at 70% lumen maintenance after 50,000 hours of use. Both LED fixtures are mounted to a single removable mounting bracket that can be easily detached from the tower for stowing or transport.

Durability: The WALTP-L2X4 Tripod Mounted Dual LED Light incorporates two IP68 rated LED light emitters on a collapsible aluminum pole. These weatherproof LED lights have a durable powder coat finish, are IP68 rated waterproof to 3 meters, sealed against intrusion by dust and dirt, and very ruggedly constructed to withstand the most demanding environments, conditions and applications.

Pole Mount: The adjustable pole mount features a pneumatic braking system that prevents unexpected or sudden collapse of the pole. If the pole is loaded is fully extended for instance and the operator inadvertently releases the locking tabs, the pole will simple ease down gently rather than suddenly collapse. This is a great feature when you'd like the added security of knowing there is no chance of serious damage should the pole be released.

Mounting: The LED light heads on this unit are mounted to a single removable bracket that allows the user to simply remove the entire light assembly from the pole for easy stowing and transport. Each LED light can be adjusted independently of the other to provide maximum coverage or

maximum intensity.

Power: These LED tower lights are equipped with a 25` straightl cord and an in-line transformer that allows operation with standard 120-277 VAC current. Alternatively, operators can disconnect the transformer and power these lights directly from 12 to 24 volt DC power sources via the 16` coil cord cigarette plug cable, as they can operate natively with DC current ranging from 9 to 32 VDC. You do not need to anything special to operate these light bars in their multi-voltage 9-32 Volt configuration. They will sense the incoming voltage and adapt accordingly.

These LED tower lights are equipped with a 25 foot cord with transform and 16 foor coil cord with cigarette plug, allowing operators to power this LED light tower from any wall outlet, generator, portable battery pack, vehicle, equipment, ATV or boat equipped with a cigarette lighter port. You do not need to anything special to operate these light bars. The transformer is universal voltage 120-277V AC, and the lights are universal voltage 9-32V DC. They will sense the incoming voltage and adapt accordingly.

Versatility: The easy deployment and multi-voltage capability of this light tower makes it ideal for rapid deployment as a scene light for first responders to downed lines, main breaks or accidents. Other applications include temporary maintenance operations, tank cleaning, power washing and other maintenance applications where general area lighting is not available. Temporary event organizers will find value in these telescoping LED lights for general area lighting in outdoor arenas where temporary power distribution is unavailable or expensive.

Unlike our larger metal halide towers, these LED lights can be positioned next to the users. While our larger WAL-C-2XM 2000 watt metal halide lights on telescoping tripods cover more area, they are typically paired with large portable electrical distribution panels, transformers or diesel generators. The noise, fumes and high wattage electrical cabling usually requires that the operator positions the portable light tower at some distance from the work area or event. While these LED light towers produce less light coverage than the large metal halide lights, they can be placed right next to the work area, event or operators, so the overall effective illumination will be greater.

REV	DESCRIPTION	DATE
A	PRODCUTION RELEASE	9/6/2022

TPM-LED-L2X4-25CC-1227-FL

LARSON ELECTRONICS®

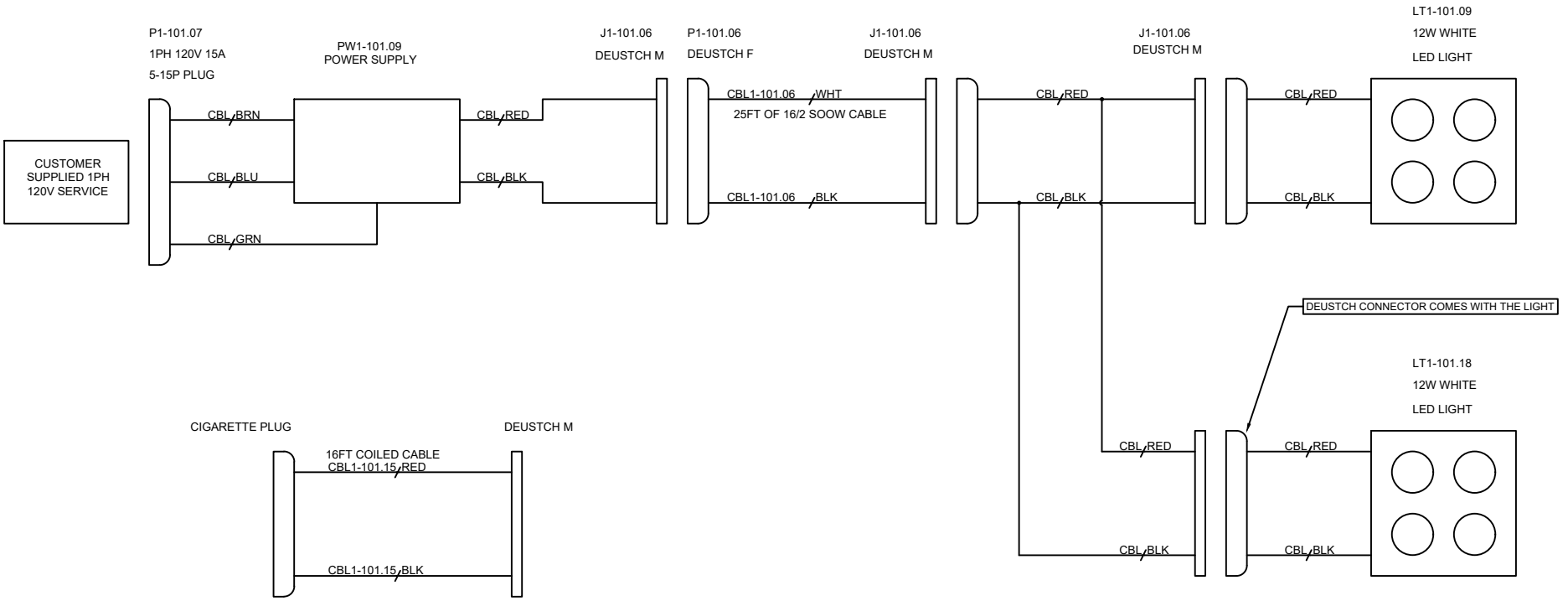

TAGS	QTY	CATALOG	DESCRIPTION
P1-101.06	1	UNV00005476	2WAY DEUTSCH-FEMALE
J1-101.06	3	UNV00005480	2 WAY DEUTSCH MALE
P1-101.07	1	UNV00006731	PLUG , STRAIGHT BLADE 15A, 125V NEMA 5-15
LT1-101.09 LT1-101.18	2	UNV00010737	4" 4X3W LED FLOOD 60K
PW1-101.09	1	UNV00005984	120-12V 5A 80W AC-DC LED SUPPLY
CBL1-101.06	1	UNV00007371	CORD 16/2 SOOW UL 90C BLK CABLE
CBL1-101.15	1	UNV00007637	16 FT 16/2 ROUND WIRE COIL CORD WITH DEUTSCH MALE CONNECTOR

LARSON ELECTRONICS
9419 E US HWY 175,
KEMP, TX 75143

TITLE			
TPM-LED-L2X4-25CC-1227-FL			
DRAWN BY	DATE	REV	
S.DESAI	9/6/2022	A	
CHECKED BY	SHEET #	DRAWING #	
K.NGUYEN	1 OF 1	101	

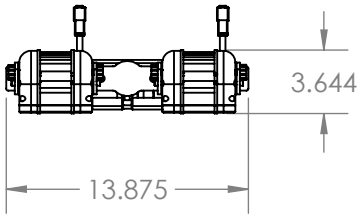

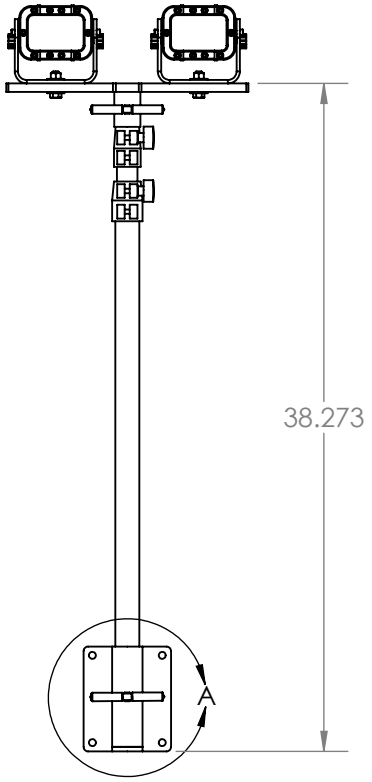

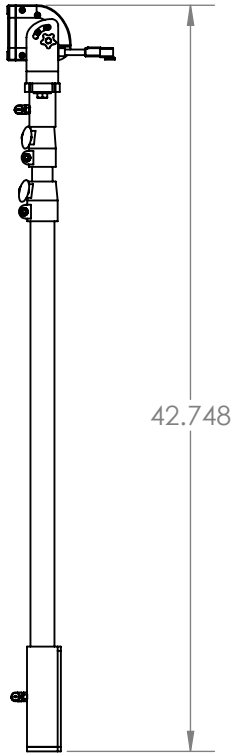

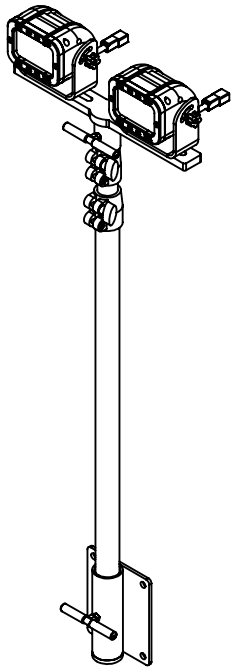

DETAIL A
SCALE 1 : 3

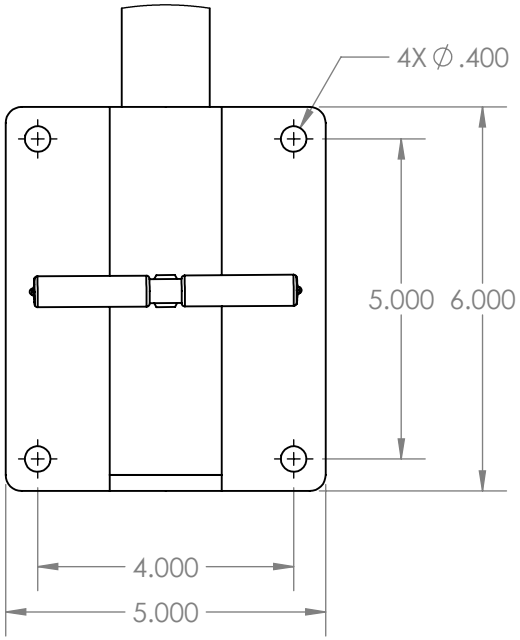

LARSON ELECTRONICS

TITLE:

TPM-LED-L2X4-25CC-1227

FINISH			
SURFACE AREA [sq. in]			NAME
DIMENSIONS ARE IN INCHES		DRAWN	CHRISTOPHER THAUER
MATERIAL		CHECKED	N/A
DO NOT SCALE DRAWING		DATE	1/4/2021

SIZE	DWG. NO.	REV
A		

SCALE: NTS | SHEET 1 OF 2

PROPRIETARY AND CONFIDENTIAL
THE INFORMATION CONTAINED IN THIS DRAWING IS THE SOLE PROPERTY OF LARSON ELECTRONICS LLC. ANY REPRODUCTION IN PART OR AS A WHOLE WITHOUT THE WRITTEN PERMISSION OF LARSON ELECTRONICS LLC IS PROHIBITED.

UNLESS OTHERWISE NOTED:

Angle	+/- .5 deg
.X	+/- .02
.XX	+/- .01
.XXX	+/- .005

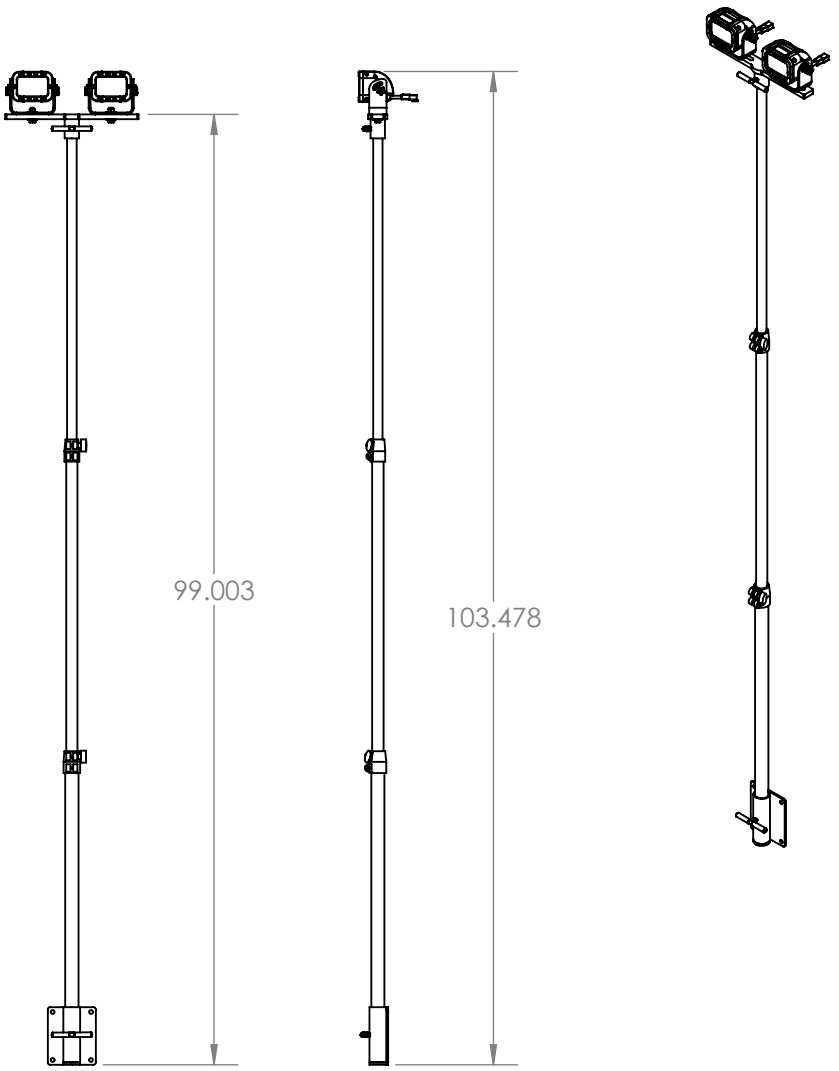

LARSON ELECTRONICS

TITLE:

TPM-LED-L2X4-25CC-1227

FINISH			
SURFACE AREA [sq. in]			NAME
DIMENSIONS ARE IN INCHES		DRAWN	CHRISTOPHER THAUER
MATERIAL		CHECKED	N/A
DO NOT SCALE DRAWING		DATE	1/4/2021

SIZE	DWG. NO.	REV
A		

SCALE: NTS | SHEET 2 OF 2

PROPRIETARY AND CONFIDENTIAL
THE INFORMATION CONTAINED IN THIS DRAWING IS THE SOLE PROPERTY OF LARSON ELECTRONICS LLC. ANY REPRODUCTION IN PART OR AS A WHOLE WITHOUT THE WRITTEN PERMISSION OF LARSON ELECTRONICS LLC IS PROHIBITED.

UNLESS OTHERWISE NOTED:

Angle	+/- .5 deg
.X	+/- .02
.XX	+/- .01
.XXX	+/- .005

Larson Electronics LLC
9419 E US HWY 175, Kemp, TX 75143
Phone: 800.369.6671

www.LarsonElectronics.com
Email: sales@LarsonElectronics.com
Fax: 903.765.7664



Larson Electronics LLC
9419 E US HWY 175, Kemp, TX 75143
Phone: 800.369.6671

www.LarsonElectronics.com
Email: sales@LarsonElectronics.com
Fax: 903.765.7664



Larson Electronics LLC
9419 E US HWY 175, Kemp, TX 75143
Phone: 800.369.6671

www.LarsonElectronics.com
Email: sales@LarsonElectronics.com
Fax: 903.765.7664



Larson Electronics LLC
9419 E US HWY 175, Kemp, TX 75143
Phone: 800.369.6671

www.LarsonElectronics.com
Email: sales@LarsonElectronics.com
Fax: 903.765.7664



Larson Electronics LLC
9419 E US HWY 175, Kemp, TX 75143
Phone: 800.369.6671

www.LarsonElectronics.com
Email: sales@LarsonElectronics.com
Fax: 903.765.7664

Frequently Asked Questions (FAQ)

There are no Faqs