Larson Electronics LLC
9419 E US HWY 175, Kemp, TX 75143
Phone: 800.369.6671

www.LarsonElectronics.com
Email: sales@LarsonElectronics.com
Fax: 903.765.7664

MMP-DC-RAM-2023-2500-C-LED

2023 Dodge Ram 2500 Classic No-Drill Rooftop Mounting Bracket - 24" x 8" LED 3rd Brake Light Magnetic Plate

Product ID: 331000

Please see last page for supporting documentation for this product (certificates, CAD files & drawings, IES files, wiring diagrams, etc).

Image: MMP-DC-RAM-2023-2500-C-LED

Larson Electronics LLC manufactures a wide variety of products, including custom built to spec designs. The pictures displayed for this unit are a general representation of form factor for the product line and may not accurately represent this exact configuration in every detail due to custom builds and changes between similar products in our standard catalog. The specifics for this configuration are listed in the specification table and supporting documentation (CAD files, Dimensional Drawing, Name Plate Diagram, Wiring Diagram, etc.). This means that specific details (receptacles, plugs, wires, connections, mounting brackets, external finishes, etc.) may not be accurately represented in images vs specifications. Please review specifications and do not order based solely on images.

MMP-DC-RAM-2023-2500-C-LED Magnetic Mounting Plate for Spotlights

Type: Magnetic Mounting Plate
Compatible Truck Models: 2023 Dodge Ram 2500 Classic body trucks with LED 3rd brake light lights
Compatible 3rd Brake Light: LED
Unit Weight: 8 lbs
Unit Dimensions: 24"W x 8.53"D x 4.49"H
Mounting Platform Dimensions: 24" x 8"
Bracket Height Above Cab: 1.5"
Weight Capacity: 30 lbs
Wind-load: Highway speeds
Frame Material: Aluminum
Bracket Material: Aluminum
Mounting Plate Material: Steel
Finish: Powder Coated
Color: White, Grey, or Black
Compatible Equipment: Any Magnetic Mount Equipment of up to 30 lbs
Installation: Via 3rd Brake Light (Rear Cab Light) - hardware included
Weatherproof Seal: Foam Gasket Between Vehicle & Bracket
Shipping Weight: 15 lbs
Shipping Dimensions: 30"L x 20"W x 10"H

Ratings/Features:

Made in the USA
CNC Machined for Precision Fitment
Aluminum Bracket w/ Steel Top Plate
No Modifications Required - OEM Fitment
Works with Any Magnetic Mount Light
Durable Construction
Aerodynamic Engineered for Highway Speeds
No Rattle or Whistle While Driving
Car-wash Safe - Includes Weatherproof Seal

Special Orders - Special Requirements

Contact us for special requirements
Toll Free: 1-800-369-6671
Intl: 1-903-270-1187
Fax: 1-903-765-7664
E-mail: sales@larsonelectronics.com

Larson Electronics LLC
9419 E US HWY 175, Kemp, TX 75143
Phone: 800.369.6671

www.LarsonElectronics.com
Email: sales@LarsonElectronics.com
Fax: 903.765.7664

PLEASE NOTE: BEFORE CALLING TO ORDER, YOU WILL NEED TO KNOW YOUR VEHICLE'S YEAR, MAKE, MODEL, TRIM PACKAGE, AND IF YOUR VEHICLE HAS AN INCANDESCENT OR LED THIRD BRAKE LIGHT. THERE IS NOTHING WE CAN LOOK UP TO HELP YOU DETERMINE THIS. YOU NEED TO LOOK AT THE LIGHT AND SEE IF THERE ARE LITTLE ROUND BULBS (INCANDESCENT) OR LITTLE SQUARE LED CHIPS. WE CANNOT FINISH YOUR ORDER WITHOUT THIS INFORMATION. VERIFY LAMP TYPE BEFORE CALLING.

Images and graphics displayed in the body of this description are for example purposes only and may not directly reflect the equipment found on your truck. As each vehicle has slightly different equipment, these images were designed for illustration purposes only to display the functionality of the product. They do not represent all models of plates, hole designs, and form factors for the vehicle mounting plates offered by Larson Electronics. Please review the product high res images, instruction manual, and dimensional drawing for accurate description of what you are buying. ALWAYS confirm the Year, Make, Model, Trim, lamp type, and if you have a bed camera prior to ordering.

Made in Texas

Increase your vehicle visibility, and reduce accidents and rooftop damage to your truck by easily installing our MMP-DC-RAM-2023-2500-C-LED lightweight third brake mounting plate. The rooftop mounting plate requires absolutely no drilling to install while supporting lights of up to 30 lbs. This mounting bracket attaches to the third brake light OEM location making it the perfect choice for the 2023 Dodge Ram 2500 Classic body trucks with LED 3rd brake light light. This MMP-DC-RAM-2023-2500-C-LED features an aluminum bracket with a 24" by 8" magnetic steel mounting surface. The lightweight aluminum mounting plate is compatible with the 2023 Dodge Ram 2500 Classic body trucks with LED 3rd brake light lights, offering operators and fleet vehicles a convenient mounting location for any magnetic light, equipment or application weighing up to 30 lbs.

PLEASE NOTE: BEFORE CALLING TO ORDER, YOU WILL NEED TO KNOW YOUR VEHICLE'S YEAR, MAKE, MODEL, TRIM PACKAGE, AND IF YOUR VEHICLE HAS AN INCANDESCENT OR LED THIRD BRAKE LIGHT. THERE IS NOTHING WE CAN LOOK UP TO HELP YOU DETERMINE THIS. YOU NEED TO LOOK AT THE LIGHT AND SEE IF THERE ARE LITTLE ROUND BULBS (INCANDESCENT) OR LITTLE SQUARE LED CHIPS. WE CANNOT FINISH YOUR ORDER WITHOUT THIS INFORMATION. VERIFY LAMP TYPE BEFORE CALLING.

The MMP-DC-RAM-2023-2500-C-LED is constructed and engineered in Texas (Made USA) from CNC precision cut aluminum for the frame, and a steel for the top mounting plate surface. This mounting plate is especially designed for the 2023 Dodge Ram 2500 Classic body trucks with LED 3rd brake light lights. The lightweight aluminum plate offers operators a sturdy and reliable platform to deploy magnetic mounted lights or equipment of any type (requires magnetic base on equipment), up to 30 lbs., on the top of their truck for optimal performance. The MMP-DC-RAM-2023-2500-C-LED is installed via the rear cab lights, has a weatherproof seal on the back side for a secure and dry installation that helps protect against scratches to the body of the truck. The mounting plate requires absolutely no drilling for installation, and the CNC manufacturing process provides perfect fitments like OEM products. The aerodynamic design of the MMP-DC-RAM-2023-2500-C-LED is engineered to support wind-loads seen at highway speeds. This rooftop mount is powder coated for added durability, car-wash safe, and offered in a black, white, or grey finish.

Click image to Enlarge

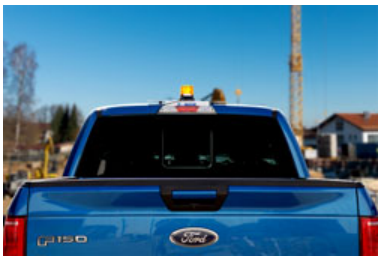

Click image to Enlarge

Larson Electronics LLC
9419 E US HWY 175, Kemp, TX 75143
Phone: 800.369.6671

www.LarsonElectronics.com
Email: sales@LarsonElectronics.com
Fax: 903.765.7664

Grooves and Contours on Roofs are not Flat and Secure Mounting Surface

MMP-DC-RAM-2023-2500-C-LED Steel Plate is Magnetic

The MMP series of vehicle mounting plates from Larson Electronics features an aluminum bracket and a steel top plate that is bolted onto the aluminum bracket. The aluminum bracket is mounted to the truck using the 3rd brake light to secure it to the vehicle. The steel plate is bolted to the top of the aluminum bracket. This steel plate allows for mounting equipment with magnetic bases to the steel plate. Due to both aesthetics and aerodynamics, newer trucks have a rounded design and contours or "grooves" on the roof. This can reduce the surface area for magnetically securing equipment to the top of the vehicle. Most equipment does not include any type of angle adjustment for the magnetic mount, and reduces the magnetic hold the equipment has to secure it to your vehicle. Additionally, many manufacturers do not provide a "no scratch" coating on the magnets due to it reducing the magnetic strength. Improper mounting surfaces and/or not pulling directly up to remove the equipment can result is the equipment sliding across the paint of your vehicle, resulting in scratches and paint damage. The use of the MMP-DC-RAM-2023-2500-C-LED mounting bracket resolves all of these issues.

Features: Absolutely NO drilling to install, functional for fleet vehicles, attaches to third brake light OEM location, weatherproof gasket, car-wash safe, lightweight aluminum structure with steel magnetic mounting surface, powder coated, comes in different colors, supports up to a 30 lb. magnetic light or structure, and safe for highway speeds. The MMP-DC-RAM-2023-2500-C-LED eliminates damage to your truck caused by rust, scratches, exposed wires, leaks, drilling holes and doesn't lower the resell value of your vehicle. The NO drill feature is great for leased trucks, eliminating rooftop damage with penalties associated with making modifications to the vehicle. This rooftop plate does not require any drilling to install; however, if desired to install this mount for other intended uses, it can be drilled for different mounting purposes.

Color Options

White

Grey

Black

PLEASE NOTE: BEFORE CALLING TO ORDER, YOU WILL NEED TO KNOW YOUR VEHICLE'S YEAR, MAKE, MODEL, TRIM PACKAGE, AND IF YOUR VEHICLE HAS AN INCANDESCENT OR LED THIRD BRAKE

Larson Electronics LLC
9419 E US HWY 175, Kemp, TX 75143
Phone: 800.369.6671

www.LarsonElectronics.com
Email: sales@LarsonElectronics.com
Fax: 903.765.7664

LIGHT. THERE IS NOTHING WE CAN LOOK UP TO HELP YOU DETERMINE THIS. YOU NEED TO LOOK AT THE LIGHT AND SEE IF THERE ARE LITTLE ROUND BULBS (INCANDESCENT) OR LITTLE SQUARE LED CHIPS. WE CANNOT FINISH YOUR ORDER WITHOUT THIS INFORMATION. VERIFY LAMP TYPE BEFORE CALLING.*

Installation: The MMP-DC-RAM-2023-2500-C-LED is easy to install and requires absolutely NO drilling. This mounting plate installs through the 3rd brake light on 2023 Dodge Ram 2500 Classic body trucks with LED 3rd brake light lights, between the body of the truck cab and the light. Operators simply remove their 3rd brake light, position the pre-cut mounting bracket and reinstall the light through the bracket with new mounting hardware included with purchase. Wiring can be ran into the cab of the truck by cutting a slit on the bottom side of the gasket and inserting cable into the cab.

The installation kit includes two toggle bolts and longer mounting bolts for the 3rd brake light. The toggle bolts are required to secure the mount to the vehicle body. The longer bolts are intended to replace the factory installed mounting bolts to account for the addition of the mounting bracket and gasket that is being installed between the cab and the light. When installed properly, there is no vibration or rattling of the mount when the vehicle is in use. The toggle bolts support the extra weight and secure the mount to the vehicle. The aerodynamic design of the front of the mount prevents any associated whistling or added road noise that may be seen with other mounting brackets.

3rd Brake Light Camera Option: Having a ***bed camera*** in the third 3rd brake light (NOT in the tailgate or bumper) will change the mounting bracket design. This bed camera is commonly referred to as "high mount camera" or "cargo camera." The view of this camera shows the contents of the truck bed. This **IS NOT** the reverse camera that is located in the tailgate that shows behind the vehicle. Those with a high mount bed camera with 3rd brake light must choose the "camera" option in order to get the correct design. Please choose the appropriate option below. The images to the right show the physical difference between models not equipped with camera (top right) and models equipped with camera (bottom right). The image below displays the viewing area that this camera will display on the in-dash screen.

Without Camera

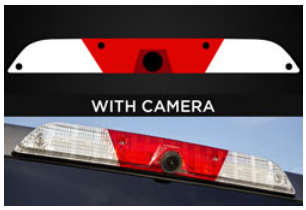

With Camera

Larson Electronics LLC
9419 E US HWY 175, Kemp, TX 75143
Phone: 800.369.6671

www.LarsonElectronics.com
Email: sales@LarsonElectronics.com
Fax: 903.765.7664

Incandescent lights have a reflector and replaceable bulb behind the lens.

Please note that MMP-DC-RAM-2023-2500-C-LED is designed for trucks with LED 3rd brake lights ONLY. Operators with %OLamp% 3rd brake lights will require the %OLAMP% model. Incandescent mounting plates and LED mounting plates are NOT interchangeable.

LED Lights have "squares" behind the lens and no replaceable bulb.

Applications: This vehicle mounting plate is used to increase vehicle visibility using magnetic base spotlights, flood lights, strobe lights, beacons, warning lights, signal lights, flashers, turn signals, brake lights, hunting lights, fishing lights, off-roading lights, horns, sirens, antennas or any rooftop magnetic based equipment. Common applications include hunting, fishing, off-roading, property management, security, search and rescue, farming operations and any other applications for which roof mounted spotlights, signal and warning lights, or other equipment is needed for the 2023 Dodge Ram truck owners.

Compatible Products: Do you not already have a magnetic light? Below are our most popular magnetic lights that are compatible with the MMP-DC-RAM-2023-2500-C-LED:

Remote Control Lights

Strobes & Beacons

LED Light Bars

Warning Light Bars

****PLEASE NOTE: BEFORE CALLING TO ORDER, YOU WILL NEED TO KNOW YOUR VEHICLE'S YEAR, MAKE, MODEL, TRIM PACKAGE, AND IF YOUR VEHICLE HAS AN INCANDESCENT OR LED THIRD BRAKE LIGHT. THERE IS NOTHING WE CAN LOOK UP TO HELP YOU DETERMINE THIS. YOU NEED TO LOOK AT THE LIGHT AND SEE IF THERE ARE LITTLE ROUND BULBS (INCANDESCENT) OR LITTLE SQUARE LED CHIPS. WE CANNOT FINISH YOUR ORDER WITHOUT THIS INFORMATION. VERIFY LAMP TYPE BEFORE CALLING.****

Additional Models: The MMP-DC-RAM-2023-2500-C-LED is designed for magnetic mounting of additional equipment within a 24" x 8" flat surface. We do offer additional sizes and form factors. For a full line of compatible mounting plates compatible with your vehicle, please visit the link below. Choose Year, Make, Model, and Trim to see all the designs from Larson Electronics that is compatible with the 2023 Dodge Ram 2500 truck.
https://www.larsonelectronics.com/category/1421/vehicle-mounting-plates

At Larson Electronics, we do more than meet your lighting needs. We also provide replacement, retrofit, and upgrade parts as well as industrial grade power accessories. Our craftsmen can custom build any lighting system and/or accessories to fit the unique demands of your operation. A commitment to honesty, quality, and dependability has made Larson Electronics a leader in the lighting and electronics business since 1973. Contact us today at 800-369-6671 or message sales@larsonelectronics.com for more information about our custom options tailored to meet your specific industry needs.

Images and graphics displayed in the body of this description are for example purposes only and may not directly reflect the equipment found on your truck. As each vehicle has slightly different equipment, these images were designed for illustration purposes only to display the functionality of the product. They do not represent all models of plates, hole designs, and form factors for the vehicle mounting plates offered by Larson Electronics. Please review the product high res images, instruction manual, and dimensional drawing for accurate description of what you are buying. ALWAYS confirm the Year, Make, Model, Trim, lamp type, and if you have a bed camera prior to ordering.

Larson Electronics LLC
9419 E US HWY 175, Kemp, TX 75143
Phone: 800.369.6671

www.LarsonElectronics.com
Email: sales@LarsonElectronics.com
Fax: 903.765.7664

Frequently Asked Questions (FAQ)

There are no Faqs

Larson Electronics LLC
9419 E US HWY 175, Kemp, TX 75143
Phone: 800.369.6671

www.LarsonElectronics.com
Email: sales@LarsonElectronics.com
Fax: 903.765.7664

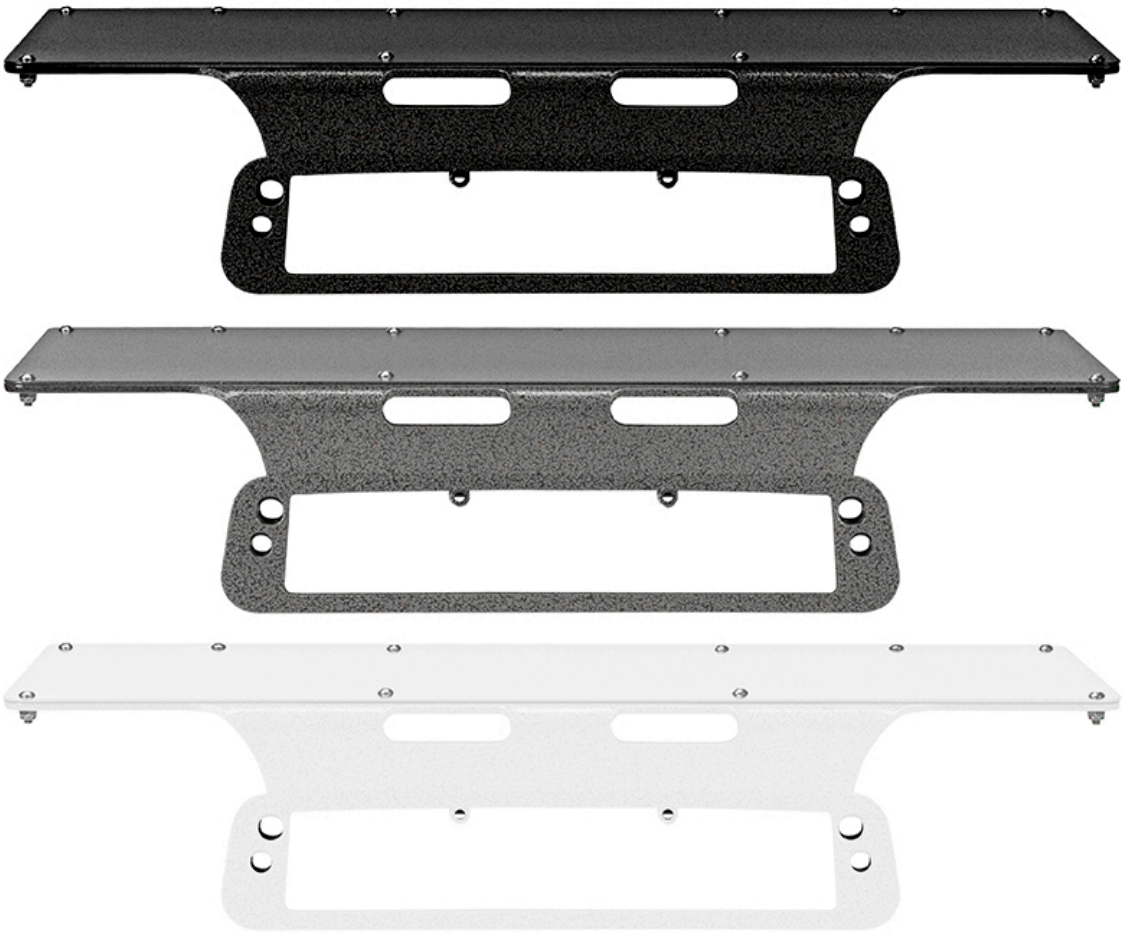

Image: MMP-DC-RAM-2023-2500-C-LED

Larson Electronics LLC
9419 E US HWY 175, Kemp, TX 75143
Phone: 800.369.6671

www.LarsonElectronics.com
Email: sales@LarsonElectronics.com
Fax: 903.765.7664

Image: MMP-DC-RAM-2023-2500-C-LED

Larson Electronics LLC
9419 E US HWY 175, Kemp, TX 75143
Phone: 800.369.6671

www.LarsonElectronics.com
Email: sales@LarsonElectronics.com
Fax: 903.765.7664

Image: MMP-DC-RAM-2023-2500-C-LED

Larson Electronics LLC
9419 E US HWY 175, Kemp, TX 75143
Phone: 800.369.6671

www.LarsonElectronics.com
Email: sales@LarsonElectronics.com
Fax: 903.765.7664

Image: MMP-DC-RAM-2023-2500-C-LED

Larson Electronics LLC
9419 E US HWY 175, Kemp, TX 75143
Phone: 800.369.6671

www.LarsonElectronics.com
Email: sales@LarsonElectronics.com
Fax: 903.765.7664

MMP-DC-RAM-2023-2500-C-LED

Product ID: 331000

Warranty: 3 Months.

Export Control Classification Number (ECCN): EAR99

Options:

MMP-DC-RAM-2023-2500-C-LED-Camera Config-Color
Example: MMP-DC-RAM-2023-2500-C-LED-CAM-WHT

Camera Config	
CAMERA	-CAM
NO CAMERA	-NOCAM

Color	
WHITE	-WHT
BLACK	-BLK
GREY	-GRY

Larson Electronics LLC
9419 E US HWY 175, Kemp, TX 75143
Phone: 800.369.6671

www.LarsonElectronics.com
Email: sales@LarsonElectronics.com
Fax: 903.765.7664

Links (Click on the below items to view):

- **HigResPic1**(https://www.larsonelectronics.com/images/product/HigResPic1/331000.JPG)
- **HigResPic2**(https://www.larsonelectronics.com/images/product/HigResPic2/331000.JPG)
- **HigResPic3**(https://www.larsonelectronics.com/images/product/HigResPic3/331000.JPG)
- **HigResPic4**(https://www.larsonelectronics.com/images/product/HigResPic4/331000.JPG)
- **HigResPic5**(https://www.larsonelectronics.com/images/product/HigResPic5/331000.JPG)
- **HigResPic6**(https://www.larsonelectronics.com/images/product/HigResPic6/331000.JPG)
- **HigResPic8**(https://www.larsonelectronics.com/images/product/HigResPic8/331000.JPG)
- **HigResPic9**(https://www.larsonelectronics.com/images/product/HigResPic9/331000.JPG)
- **HigResPic10**(https://www.larsonelectronics.com/images/product/HigResPic10/331000.JPG)
- **ISO 9001 Certification**(http://larsonelectronics.com/images/pdfdocs/ISO9001.PDF)
- **Business Certificate**(https://www.larsonelectronics.com/images/pdfdocs/w9.PDF)
- **Shipping Time Map**(https://www.larsonelectronics.com/images/product/ShippingTimeMap/ShippingTimeMap.pdf)