Larson Electronics LLC
9419 E US HWY 175, Kemp, TX 75143
Phone: 800.369.6671

www.LarsonElectronics.com
Email: sales@LarsonElectronics.com
Fax: 903.498.3364

EPLC2-LC-48-LED-R1-1227-CM

100W Hazardous Location Integrated LED Linear Fixture - C2D1 - 120-277V - 15,300 lms/Ceiling Mount - IP66/Field Serviceable

Product ID: 276443

Please see last page for supporting documentation for this product(certificates, CAD files & drawings, IES files, wiring diagrams, etc).



Larson Electronics LLC manufactures a wide variety of products, including custom built to spec designs. The pictures displayed for this unit are a general representation of form factor for the product line and may not accurately represent this exact configuration in every detail due to custom builds and changes between similar products in our standard catalog. The specifics for this configuration are listed in the specification table and supporting documentation (CAD files, Dimensional Drawing, Name Plate Diagram, Wiring Diagram, etc.). This means that specific details (receptacles, plugs, wires, connections, mounting brackets, external finishes, etc.) may not be accurately represented in images vs specifications. Please review specifications and do not order based solely on images.

EPLC2-LC-48-LED-R1-1227-CM - Hazardous Location LED Fixture

Listing: NRTL Listed to United States, Canada
Lamp Technology: LED
Dimensions: 47.72'"-L
Weight: 30 lbs
Voltage: 120-277V AC, 50/60Hz
Total Watts: 100W
Total Lumens: 15,300 lms
Luminous Efficacy: 153 Lm/w
Lamp Life: 75,000+ Hours
LED Color Temperature: 5000K, 4500K, 4000K, 3500K or 3000K
Color Rendering Index: >80 CRI
Lamp Type: Integrated LED
Lamp Base: -
Replacement Lamp: -
Beam Angle: 80° x 120°
Lighting Configuration: Flood
Power Efficiency: >95%
Power Factor: 0.992
Amps: 0.833A @ 120V, 0.480A @ 208V, 0.454A @ 220V, 0.416A @ 240V, 0.361A @ 277V
Ambient Operating Temp Range: -50°C to +65°C
Operating Temp Rating: T5

Ratings/Approvals

Class I, Division 2 Groups A, B, C and D
Class II, Division 1 Groups E, F and G
Class II, Division 2 Groups F and G
Class III, Divisions 1 & 2
NRTL Certified to UL 844 Ed. 13
NRTL Certified to UL 1598
NRTL Certified to C22.2 No. 137 Rev 2009
NRTL Certified to C22.2 No. 250.0
NRTL Certified to C22.2 No. 30-M-1986 Rev 2012
IEC 60529 Tested
IP66 Rated Waterproof
Replacement for Fluorescent Linear Fixtures
Field Serviceable

Housing Material: Copper Free Cast Aluminum (non sparking)
Housing Finish: Epoxy Powder Coated - Gray
Lens Material: Hardened Borosilicate Glass
Gasket Material: Silicone
Mounting: Ceiling Mount Box- Other Mounts Available
Wiring Hub: (4) 3/4" NPT

Special Orders - Special Requirements
Contact us for special requirements
Toll Free: 1-800-369-6671
Intl: 1-903-270-1187
Fax: 1-903-498-3364
E-mail: sales@larsonelectronics.com

The Larson Electronics EPLC2-LC-48-LED-R1-1227-CM Hazardous Location Integrated LED Linear Fixture offers powerful lighting with heavy-duty and energy efficient benefits in Class II, Division 1 rated combustible sites that contain combustible dust, fiber or flyings. This 100-watt LED unit delivers 15,300 lumens and is field serviceable. Compatible with ceiling mount installations, the IP66 rated fixture operates on universal 120-277V AC, 50/60Hz and features four 3/4" NPT wiring hubs.
The EPLC2-LC-48-LED-R1-1227-CM is a Class I, Division 2 and Class II, Division 1 & 2 linear fixture that is designed for reliable illumination in facilities with combustible dust (flammable "finely divided" solid materials of 420 microns or less, which can pass through a No. 40 sieve). This 100-watt fixture offers 15,300 lumens of high quality light in hazardous locations requiring protection due to the presence of combustible dust, such as grain storage, sugar facilities, agriculture, coal processing, metal working, mining and more. An 80° x 120° flood beam angle promotes wide light distribution in the surrounding area. Color temperature options for the LED light includes: 5000K, 4500K, 4000K, 3500K or 3000K. This unit is a suitable replacement for fluorescent linear fixtures. Equipped with field serviceable features, the LED assembly is sealed from the driver box, allowing the driver to be changed without impacting the LEDs.
This hazardous location light is protected by a copper-free cast aluminum housing, with an epoxy powder coated gray finish for durability in rugged environments. The non-sparking housing is specially designed to dissipate heat, which increases the efficiency and lifespan of the LEDs and electronic components. Equipped with a hardened borosilicate glass lens, the T5-rated LED fixture carries an IP66 waterproof rating.
LED Benefits: Unlike gas burning and arc type lamps that have glass bulbs, LEDs have no filaments or fragile housings to break during operation and/or transportation. Instead of heating a small filament or using a combination of gases to produce light, light emitting diodes (LEDs) use semi-conductive materials that illuminate when electric current is applied, providing instant illumination with no warm up or cool down time before re-striking. Because there is no warm up period, this light can be cycled on and off with no reduction in lamp life.
LED lights run at significantly cooler temperatures than traditional metal halide and high pressure sodium lights and contain no harmful gases, vapors, or mercury, making them both safer and more energy efficient. No extra energy is wasted in cooling enclosed work areas due to external heat emissions from bulb type lights, and the operator risks associated with traditional lighting methods, such as accidental burns and exposure to hazardous substances contained in the glass bulbs, are eliminated. In addition, LEDs are also safer for the environment as they are 100% recyclable, which eliminates the need for costly special disposal services required with traditional gas burning and arc type lamps.
Field Serviceability: This LED light fixture is field serviceable. All major internal components can be purchased from Larson Electronics and installed by a licensed electrician with basic tools. With most explosion proof fixtures, the fixture must be returned to the manufacturer for repair work, which presents downtime and long turn around times for repair work. Larson Electronics addresses this issue with products that cater to field serviceability, allowing operators to perform service work without having to return the fixture to the manufacturer in the event of damage or failure.
Voltage: The hazardous location light is universal voltage capable and can be operated with 120-277V AC, 50/60Hz.
Wiring: Four 3/4" NPT hubs at the back of the unit are available for completing wiring connections.

Mount: This linear LED light fixture comes standard with ceiling mount box features. Several mounting options including pendant, wall and trunnion mounts for replacing existing light fixtures can be ordered separately.
Suggested Applications: The EPLC2-LC series of hazardous location light fixtures are approved for use within environments where flammable or combustible dusts, fibers, and flying exist or stand the potential to exist, and where flammable or combustible gases or vapors stand the potential to exist. This hazardous area linear light is ideal for a wide variety of applications. Applications include but not limited to chemical manufacturing, coke processing, cranes, food processing (with food grade gasketed polycarbonate lens), grain processing, laboratories, manufacturing, marine vessels, mining, paper processing, pharmaceuticals, power plants, sand blast cabinets, shipyards, storage facilities, textile, washdown areas, and woodworking. Click here to read the NEC description for explosion proof and hazardous locations.
At Larson Electronics, we do more than meet your lighting needs. We also provide replacement, retrofit, and upgrade parts as well as industrial grade power accessories. Our craftsmen can custom build any lighting system and/or accessories to fit the unique demands of your operation. A commitment to honesty, quality, and dependability has made Larson Electronics a leader in the lighting and electronics business since 1973. Contact us today at 800-369-6671 or message sales@larsonelectronics.com for more information about our custom options tailored to meet your specific industry needs.

Larson Electronics LLC
9419 E US HWY 175, Kemp, TX 75143
Phone: 800.369.6671

www.LarsonElectronics.com
Email: sales@LarsonElectronics.com
Fax: 903.498.3364

Frequently Asked Questions (FAQ)

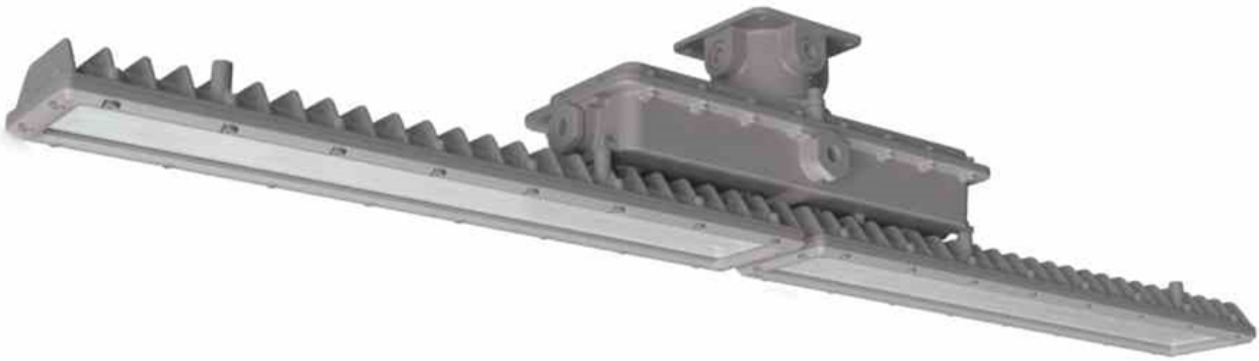

Larson Electronics LLC
9419 E US HWY 175, Kemp, TX 75143
Phone: 800.369.6671

www.LarsonElectronics.com
Email: sales@LarsonElectronics.com
Fax: 903.498.3364

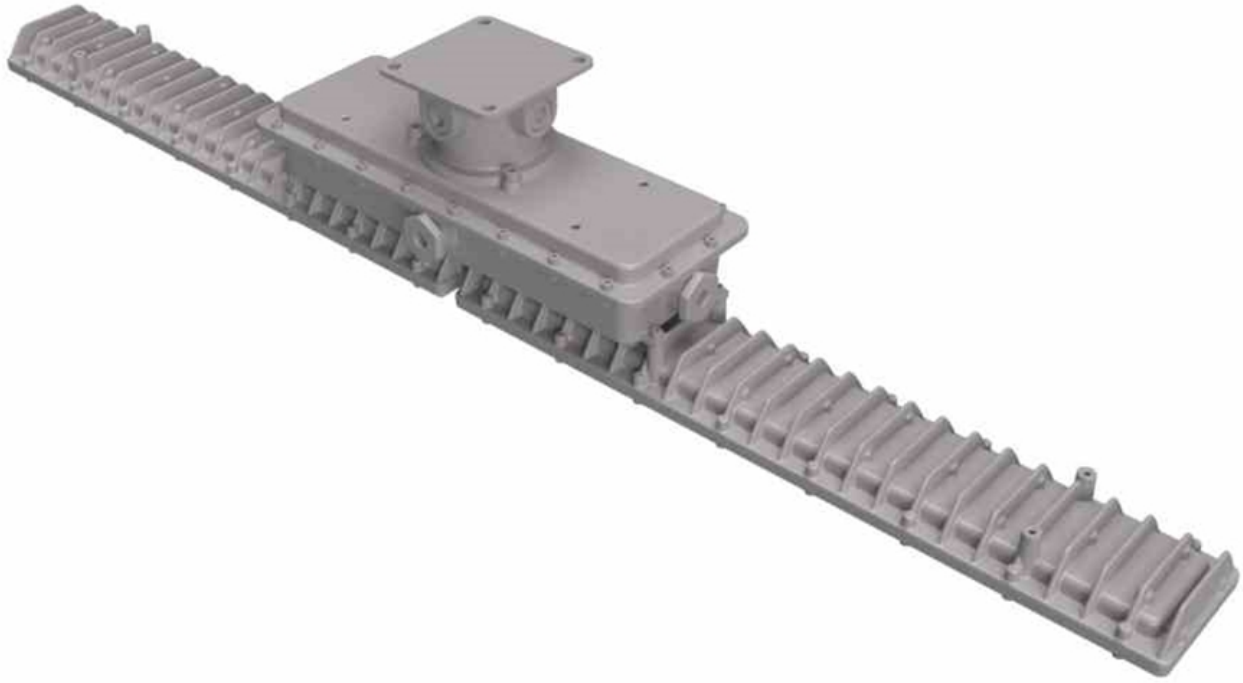





EPLC2-LC-48-LED-R1-1227-CM
Product ID: 276443

Warranty: 60 Months

Harmonized System (HS) Code: 9405.41.84.10
Export Control Classification Number (ECCN): EAR99

Options:
EPLC2-LC-48-LED-R1-1227-CM-Color Temp
Example: EPLC2-LC-48-LED-R1-1227-CM-50K

Color Temp	
5000K	-50K
4500K	-45K
4000K	-40K
3500K	-35K
3000K	-30K

Links (Click on the below items to view):

- **STEP File (3D CAD Model)**
- **Wiring Diagram (Oneline)**
- **HigResPic1**
- **HigResPic2**
- **HigResPic3**
- **HigResPic4**
- **HigResPic5**
- **ISO 9001 Certification**
- **Business Certificate**
- **Shipping Time Map**