Larson Electronics LLC
9419 E US HWY 175, Kemp, TX 75143
Phone: 800.369.6671

www.LarsonElectronics.com
Email: sales@LarsonElectronics.com
Fax: 903.498.3364

MMP-DC-RAM-2019-1500-LED

2019 Dodge Ram 1500 No-Drill Rooftop Mounting Bracket - 24" x 8" LED 3rd Brake Light Magnetic Plate

Product ID: 257926

Please see last page for supporting documentation for this product(certificates, CAD files & drawings, IES files, wiring diagrams, etc).

Larson Electronics LLC manufactures a wide variety of products, including custom built to spec designs. The pictures displayed for this unit are a general representation of form factor for the product line and may not accurately represent this exact configuration in every detail due to custom builds and changes between similar products in our standard catalog. The specifics for this configuration are listed in the specification table and supporting documentation (CAD files, Dimensional Drawing, Name Plate Diagram, Wiring Diagram, etc.). This means that specific details (receptacles, plugs, wires, connections, mounting brackets, external finishes, etc.) may not be accurately represented in images vs specifications. Please review specifications and do not order based solely on images.

MMP-DC-RAM-2019-1500-LED Magnetic Mounting Plate for Spotlights

Type: Magnetic Mounting Plate
Compatible Truck Models: 2019 Dodge Ram 1500 Standard body trucks with LED 3rd brake light lights
Compatible 3rd Brake Light: LED
Unit Weight: 8 lbs
Unit Dimensions: 24"W x 8.53"D x 4.49"H
Mounting Platform Dimensions: 24" x 8"
Bracket Height Above Cab: 1.5"
Weight Capacity: 30 lbs
Wind-load: Highway speeds
Frame Material: Aluminum
Bracket Material: Aluminum
Mounting Plate Material: Steel
Finish: Powder Coated
Color: White, Grey, or Black
Compatible Equipment: Any Magnetic Mount Equipment of up to 30 lbs
Installation: Via 3rd Brake Light (Rear Cab Light) - hardware included
Weatherproof Seal: Foam Gasket Between Vehicle & Bracket
Shipping Weight: 15 lbs
Shipping Dimensions: 30"L x 20"W x 10"H

Ratings/Features:

Made in the USA
CNC Machined for Precision Fitment
Aluminum Bracket w/ Steel Top Plate
No Modifications Required - OEM Fitment
Works with Any Magnetic Mount Light
Durable Construction
Aerodynamic Engineered for Highway Speeds
No Rattle or Whistle While Driving
Car-wash Safe - Includes Weatherproof Seal

Special Orders - Special Requirements

Contact us for special requirements
Toll Free: 1-800-369-6671
Intl: 1-903-270-1187
Fax: 1-903-498-3364
E-mail: sales@larsonelectronics.com

PLEASE NOTE: BEFORE CALLING TO ORDER, YOU WILL NEED TO KNOW YOUR VEHICLE'S YEAR, MAKE, MODEL, TRIM PACKAGE, AND IF YOUR VEHICLE HAS AN INCANDESCENT OR LED THIRD BRAKE LIGHT. THERE IS NOTHING WE CAN LOOK UP TO HELP YOU DETERMINE THIS. YOU NEED TO LOOK AT THE LIGHT AND SEE IF THERE ARE LITTLE ROUND BULBS (INCANDESCENT) OR LITTLE SQUARE LED CHIPS. WE CANNOT FINISH YOUR ORDER WITHOUT THIS INFORMATION. VERIFY LAMP TYPE BEFORE CALLING.*

Larson Electronics LLC
9419 E US HWY 175, Kemp, TX 75143
Phone: 800.369.6671

www.LarsonElectronics.com
Email: sales@LarsonElectronics.com
Fax: 903.498.3364

Images and graphics displayed in the body of this description are for example purposes only and may not directly reflect the equipment found on your truck. As each vehicle has slightly different equipment, these images were designed for illustration purposes only to display the functionality of the product. They do not represent all models of plates, hole designs, and form factors for the vehicle mounting plates offered by Larson Electronics. Please review the product high res images, instruction manual, and dimensional drawing for accurate description of what you are buying. ALWAYS confirm the Year, Make, Model, Trim, lamp type, and if you have a bed camera prior to ordering.

Frequently Asked Questions (FAQ)

Larson Electronics LLC
9419 E US HWY 175, Kemp, TX 75143
Phone: 800.369.6671

www.LarsonElectronics.com
Email: sales@LarsonElectronics.com
Fax: 903.498.3364

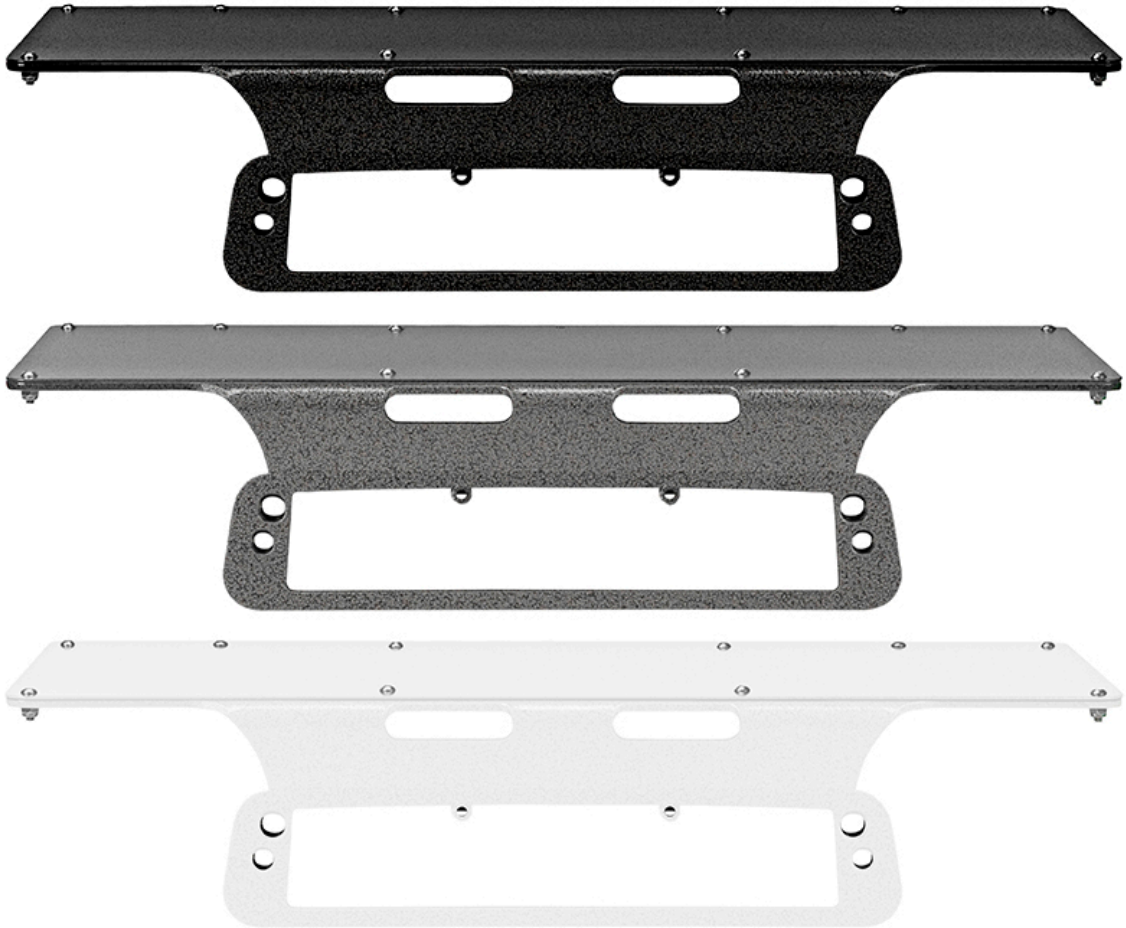

Larson Electronics LLC
9419 E US HWY 175, Kemp, TX 75143
Phone: 800.369.6671

www.LarsonElectronics.com
Email: sales@LarsonElectronics.com
Fax: 903.498.3364

Larson Electronics LLC
9419 E US HWY 175, Kemp, TX 75143
Phone: 800.369.6671

www.LarsonElectronics.com
Email: sales@LarsonElectronics.com
Fax: 903.498.3364

Larson Electronics LLC
9419 E US HWY 175, Kemp, TX 75143
Phone: 800.369.6671

www.LarsonElectronics.com
Email: sales@LarsonElectronics.com
Fax: 903.498.3364

MMP-DC-RAM-2019-1500-LED
Product ID: 257926

Warranty: 3 Months.

Harmonized System (HS) Code: 9405.41.84.10
Export Control Classification Number (ECCN): EAR99

Options:
MMP-DC-RAM-2019-1500-LED-Camera Config-Color
Example: MMP-DC-RAM-2019-1500-LED-CAM-WHT

Camera Config	
CAMERA	-CAM
NO CAMERA	-NOCAM

Color	
WHITE	-WHT
BLACK	-BLK
GREY	-GRY

Links (Click on the below items to view):

- **MSDS (Material Safety Data Sheet**
- **Operations Manual**
- **HigResPic1**
- **HigResPic2**
- **HigResPic3**
- **HigResPic4**
- **HigResPic5**
- **HigResPic6**
- **HigResPic8**
- **HigResPic9**
- **HigResPic10**
- **ISO 9001 Certification**
- **Business Certificate**
- **Shipping Time Map**