Larson Electronics LLC
9419 E US HWY 175, Kemp, TX 75143
Phone: 800.369.6671

www.LarsonElectronics.com
Email: sales@LarsonElectronics.com
Fax: 903.765.7664

CGB-PXSS2K-NPB-32L-M32

Explosion Proof Cable Gland - M32 NPT - Nickel Plated Brass - ATEX Rated N4X 20.1MM-27.4MM Cable OD

Product ID: 153140

Please see last page for supporting documentation for this product (certificates, CAD files & drawings, IES files, wiring diagrams, etc).



Image: CGB-PXSS2K-NPB-32L-M32

Larson Electronics LLC manufactures a wide variety of products, including custom built to spec designs. The pictures displayed for this unit are a general representation of form factor for the product line and may not accurately represent this exact configuration in every detail due to custom builds and changes between similar products in our standard catalog. The specifics for this configuration are listed in the specification table and supporting documentation (CAD files, Dimensional Drawing, Name Plate Diagram, Wiring Diagram, etc.). This means that specific details (receptacles, plugs, wires, connections, mounting brackets, external finishes, etc.) may not be accurately represented in images vs specifications. Please review specifications and do not order based solely on images.

CGB-PXSS2K-NPB-32L-M32 Cable Gland

Unit Type: Explosion Proof Cable Gland (Unarmored)
Weight: 0.99 lb
Entry Thread (Hub): M32
Minimum Thread Length: 15mm
Diameter Over Conductors: 23.6mm (Max)
Number of Conductors: 51 (Max)
Cable Diameter: 20.1mm (Min) to 27.4mm (Max)
Dims Across Flats: 46mm (Max)
Dims Across Corners: 51 mm (Max)
Nominal Protrusion Length: 69.5 mm
Operating Temp: -60°C to +100°C
Materials: Nickel Plated Brass, SS, Aluminum, Halogen Free Thermoplastic Elastomer (Seal)

Ratings

Zone 1, 2, 21, 22
ATEX Certified
IECEx, CSA Approved
INMETRO Approved
GOST R, GOST K Certified
Lloyds, DNV, ABS Approved
Rok, GGTN Permitted
IP66/IP67/IP68
NEMA 4X

Special Orders - Special Requirements

Contact us for special requirements

Toll Free: 1-800-369-6671
Intl: 1-903-270-1187
Fax: 1-903-765-7664
E-mail: sales@larsonelectronics.com

The Larson Electronics CGB-PXSS2K-NPB-32L-M32 Explosion Proof Cable Gland provides secure and safe cable connections in combustible facilities. This unarmored, triple certified flameproof cable gland is constructed of nickel plated brass and caters to standard M32 hubs for connection.

The CGB-PXSS2K-NPB-32L-M32 is a heavy duty cable gland for flammable and rugged environments. This unarmored unit features a standard entry thread of M32. The ATEX-rated cable gland is constructed of nickel plated brass, stainless steel and aluminum. A halogen-free thermoplastic elastomer/barrier compound is used to seal the unit. The accessory is NEMA 4X rated and waterproof (IP66-IP68). This explosion proof cable gland is designed for use in environments ranging between -60°C to +100°C.

Applications: Mechanical cable retention, cable connections, cable fittings, explosive work sites, hazardous locations, instrumentation, telecommunication, cable management and more.

At Larson Electronics, we do more than meet your lighting needs. We also provide replacement, retrofit, and upgrade parts as well as industrial grade power accessories. Our craftsmen can custom build any lighting system and/or accessories to fit the unique demands of your operation. A commitment to honesty, quality, and dependability has made Larson Electronics a leader in the lighting and electronics business since 1973. Contact us today at 800-369-6671 or message sales@larsonelectronics.com for more information about our custom options tailored to meet your specific industry needs.

Larson Electronics LLC
9419 E US HWY 175, Kemp, TX 75143
Phone: 800.369.6671

www.LarsonElectronics.com
Email: sales@LarsonElectronics.com
Fax: 903.765.7664

Frequently Asked Questions (FAQ)

There are no Faqs

Larson Electronics LLC
9419 E US HWY 175, Kemp, TX 75143
Phone: 800.369.6671

www.LarsonElectronics.com
Email: sales@LarsonElectronics.com
Fax: 903.765.7664

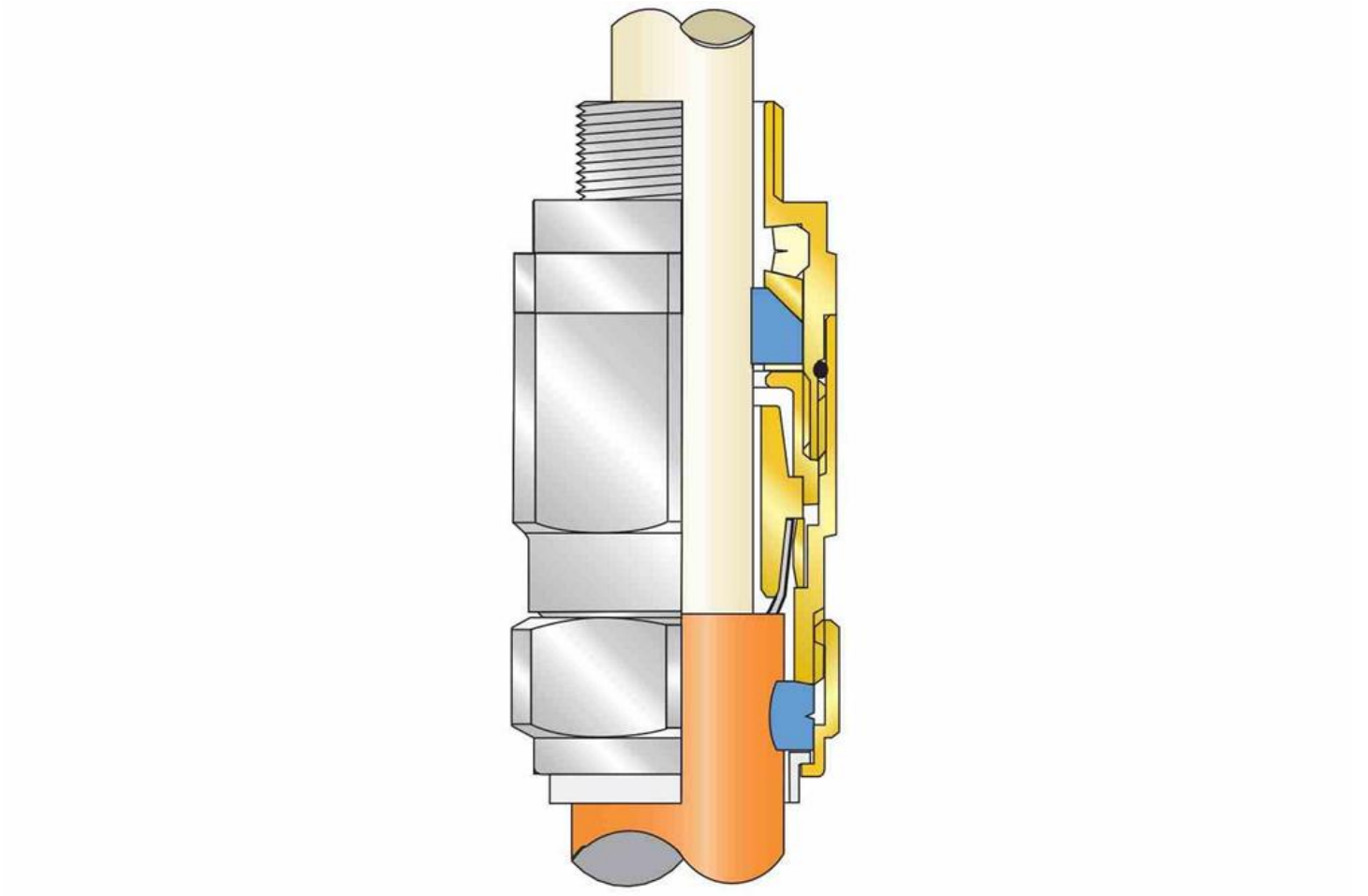

Image: CGB-PXSS2K-NPB-32L-M32

Export Control Classification Number (ECCN): EAR99

Larson Electronics LLC
9419 E US HWY 175, Kemp, TX 75143
Phone: 800.369.6671

www.LarsonElectronics.com
Email: sales@LarsonElectronics.com
Fax: 903.765.7664

Links (Click on the below items to view):

- **ABS Certificate (Offshore, American Ship Builders)**(https://www.larsonelectronics.com/images/product/ABSCert/153140.PDF)
- **ATEX Certificate (European Explosion Proof)**(https://www.larsonelectronics.com/images/product/ATEXCert/153140.PDF)
- **Canadian CEC Certificate (Commonly referred to as CSA Certificate)**(https://www.larsonelectronics.com/images/product/CECCert/153140.PDF)
- **CE Certificate**(https://www.larsonelectronics.com/images/product/CECert/153140.PDF)
- **Certificate 1, Misc**(https://www.larsonelectronics.com/images/product/Cert1/153140.PDF)
- **Certificate 2, Misc**(https://www.larsonelectronics.com/images/product/Cert2/153140.PDF)
- **Certificate 3, Misc**(https://www.larsonelectronics.com/images/product/Cert3/153140.PDF)
- **Certificate 4, Misc**(https://www.larsonelectronics.com/images/product/Cert4/153140.PDF)
- **Certificate 5, Misc**(https://www.larsonelectronics.com/images/product/Cert5/153140.PDF)
- **IEC Ex Certificate (International Explosion Proof)**(https://www.larsonelectronics.com/images/product/IECExCert/153140.PDF)
- **INMETRO Certificate (Brazil)**(https://www.larsonelectronics.com/images/product/INMETROCert/153140.PDF)
- **MSDS (Material Safety Data Sheet**(https://www.larsonelectronics.com/images/product/Msds/153140.PDF)
- **Operations Manual**(https://www.larsonelectronics.com/images/product/Manual/153140.PDF)
- **RoHS Certificate (Restriction of Hazardous Substances)**(https://www.larsonelectronics.com/images/product/RoHSCert/153140.PDF)
- **USA NEC Certificate (Commonly referred to as UL Certificate)**(https://www.larsonelectronics.com/images/product/NECCert/153140.PDF)
- **HigResPic1**(https://www.larsonelectronics.com/images/product/HigResPic1/153140.JPG)
- **HigResPic2**(https://www.larsonelectronics.com/images/product/HigResPic2/153140.JPG)
- **ISO 9001 Certification**(http://larsonelectronics.com/images/pdfdocs/ISO9001.PDF)
- **Business Certificate**(https://www.larsonelectronics.com/images/pdfdocs/w9.PDF)
- **Shipping Time Map**(https://www.larsonelectronics.com/images/product/ShippingTimeMap/ShippingTimeMap.pdf)