Larson Electronics LLC
9419 E US HWY 175, Kemp, TX 75143
Phone: 800.369.6671

www.LarsonElectronics.com
Email: sales@LarsonElectronics.com
Fax: 903.498.3364

EXP-EMG-EXT-LE6-3L

Explosion Proof Bug Eye Emergency LED Exit Fixture - Self-Testing- 90 Min. Emergency Runtime- C1D1&2

Product ID: 148160

Please see last page for supporting documentation for this product(certificates, CAD files & drawings, IES files, wiring diagrams, etc).



Larson Electronics LLC manufactures a wide variety of products, including custom built to spec designs. The pictures displayed for this unit are a general representation of form factor for the product line and may not accurately represent this exact configuration in every detail due to custom builds and changes between similar products in our standard catalog. The specifics for this configuration are listed in the specification table and supporting documentation (CAD files, Dimensional Drawing, Name Plate Diagram, Wiring Diagram, etc.). This means that specific details (receptacles, plugs, wires, connections, mounting brackets, external finishes, etc.) may not be accurately represented in images vs specifications. Please review specifications and do not order based solely on images.

EXP-EMG-EXT-LE6-3L Explosion Proof Emergency LED Exit Sign
Lamp Type: LED
Dimensions: 31”H x 22”W x 10.5”D
Weight: 8 lbs
Voltage: 120/277V AC, 60Hz
Watts: 3.3W
Lumens: 99
Luminous Efficacy: 30 Lm/W
LED Light Color: White
LED Life Expectancy: 100,000 Hours
Emergency Runtime: 90 Minutes
Battery: Maintenance-Free 3.6 Volt NiCad Rechargeable Battery
Battery Recharge Time: 24 Hours
Battery Life Expectancy: 15 Years
Wiring: Operator Provided Wiring & Seal Off
Ambient Operating Temperature: -40°C to +60°C (-40°F to +140°F)
Mounting: Surface Mount
Adjustability: Lamp Heads Horizontally & Vertically Adjustable
Housing Material: Die Cast Aluminum
Housing Color: Powder Coated - Grey
Lens Material: Polycarbonate

Ratings/Approvals
Listed for United States & Canada
Class I, Divisions 1 & 2, Groups B, C, D
Class I, Zones 1 & 2, Groups IIB+H2, IIA
Class II, Divisions 1 & 2, Groups E, F, G
Class III, Divisions 1 & 2
NEMA 3R, 4, 7 (B, C, D), 9 (E, F, G)
NRTL Listed to UL 508A
NRTL Listed to UL 1203
NRTL Listed to CSA C22.2 No 14, 25, 30
90 Minute Emergency Runtime
24 Hour Battery Recharge Time
Self-Testing Unit
Horizontal and Vertical Adjustable
CE Certified

Special Orders- Requirements
Contact us for special requirements
Toll Free: 1-800-369-6671
Intl: 1-903-270-1187
Fax: 1-903-498-3364
E-mail: sales@larsonelectronics.com

The EXP-EMG-EXT-LE6-3L from Larson Electronics is an Explosion Proof Bug Eye Emergency LED Exit Sign Light Fixture that is Class I, Divisions 1

& 2, Groups B, C, D, Class I, Zones 1 & 2, Groups IIB+H2, IIA, Class II, Divisions 1 & 2, Groups E, F, G and Class III Divisions 1 & 2 rated for hazardous areas. The EXP-EMG-EXT-LE6-3L produces 99 total fixture lumens while drawing only 3.3 total watts and will operate for at least 90 minutes in the event of a power failure or outage. This unit is self-testing, has a 24 hour battery recharge time following emergency operation and operates on 120/277V AC @ 60Hz. The EXP-EMG-EXT-LE6-3L is an ideal solution for providing emergency lighting and exit marking. This single sided exit sign is an ideal emergency exit marking solution for hazardous locations where failsafe reliability is a must. The bug eye lights and exit sign are illuminated under standard main grid power under normal operation. when power is lost, the unit switches to battery power.

The EXP-EMG-EXT-LE6-3L explosion proof emergency bug eye LED exit sign light fixture is ideal for installation in hazardous areas that require emergency illumination in the event of a power failure or power outage. This fixture features three explosion proof enclosures that are configured in a bug eye layout and a bottom mounted single sided exit sign. The two upper enclosures house the LEDs while the center enclosure contains an indicator light and the exit sign hangs down below. The unions between the upper enclosures, the indicator light enclosure and the exit sign allow for both horizontal and vertical adjustment.

Light Features: The EXP-EMG-EXT-LE6-3L features three lamps that each contain eight LEDs that draw a total of 1.1 watts per lamp. Each lamp produces 33 lumens of high-intensity white LED light for a fixture total of 99 lumens produced while drawing a total of 3.3 watts. This explosion proof emergency LED exit sign light fixture features brown-out, short circuit and voltage surge protection and has a low voltage disconnect which prevents damage to the battery caused by a deep discharge. This self-testing LED fixture will run for at least 90 minutes after a power failure thanks to the maintenance-free 3.6 volt NiCad battery. After emergency use, the battery takes 24 hours to completely recharge.

LED Benefits: Unlike gas burning and arc type lamps that have glass bulbs, LEDs have no filaments or fragile housings to break during operation and/or transportation. Instead of heating a small filament or using a combination of gases to produce light, light emitting diodes (LEDs) use semi-conductive materials that illuminate when electric current is applied, providing instant illumination with no warm up or cool down time before re-striking. Because there is no warm up period, this light can be cycled on and off with no reduction in lamp life.

LED lights run at significantly cooler temperatures than traditional metal halide and high pressure sodium lights and contain no harmful gases, vapors, or mercury, making them both safer and more energy efficient. No extra energy is wasted in cooling enclosed work areas due to external heat emissions from bulb type lights, and the operator risks associated with traditional lighting methods, such as accidental burns and exposure to hazardous substances contained in the glass bulbs, are eliminated. In addition, LEDs are also safer for the environment as they are 100% recyclable, which eliminates the need for costly special disposal services required with traditional gas burning and arc type lamps.

Emergency Operation: The EXP-EMG-EXT-LE6-3L features a backup battery that will run the fixture for at least 90 minutes following a power outage or any other loss of power. The included emergency backup battery is a 3.6 volt NiCad rechargeable unit. These batteries are maintenance-free and have a life expectancy of 15 years while being able to operate in a wide variety of conditions including in temperatures ranging from 0°C to +40°C. This unit also features a low voltage disconnect. This means that if the fixture detects that the battery`s terminal voltage has fallen below a certain level, the low voltage circuit will disconnect the emergency lighting load until normal power is restored. This prevents the battery from experiencing a deep discharge and becoming damaged. The bug eye lights and exit sign are illuminated under standard main grid power under normal operation. when power is lost, the unit switches to battery power.

Explosion Proof Ratings: The EXP-EMG-EXT-LE6-3L from Larson Electronics is an explosion proof emergency LED fixture. This particular unit is Class I, Divisions 1 & 2, Groups B, C, D, Class I, Zones 1 & 2, Groups IIB+H2, IIA, Class II,

Divisions 1 & 2, Groups E, F, G and Class III Divisions 1 & 2 rated for hazardous areas.

Wiring: The EXP-EMG-EXT-LE6-3L explosion proof emergency self-testing LED fixture is **NOT** a factory sealed fixture. Operators will bring their own wiring to a junction box and complete their connects. The operator will also provide their own seal off for this fixture. The EXP-EMG-EXT-LE6-3L operates on 120/277V AC @ 60Hz.

Mounting: The EXP-EMG-EXT-LE6-3L is designed to be surface mounted to flat surfaces such as walls. The unions connecting the upper lamps to the lower indicator light enclosure and the exit sign allow for both horizontal and vertical adjustment. This gives operators the ability to adjust the light to their specific mounting location for ideal light coverage during a power failure or power outage.

Suggested Applications: The EXP-EMG-EXT-LE6-3L is ideal for use as emergency exit lighting in areas where an explosion proof fixture is required.

At Larson Electronics, we do more than meet your lighting needs. We also provide replacement, retrofit, and upgrade parts as well as industrial grade power accessories. Our craftsmen can custom build any lighting system and/or accessories to fit the unique demands of your operation. A commitment to honesty, quality, and dependability has made Larson Electronics a leader in the lighting and electronics business since 1973. Contact us today at 800-369-6671 or message sales@larsonelectronics.com for more information about our custom options tailored to meet your specific industry needs.

High Quality Features

1. Low power consumption.
2. Instant on/off operation.
3. Fixture constructed of extruded corrosion resistant copper free aluminum alloy.
4. Superior color rendering compared to HPS, LPS, MH.
5. Retains 70% lumen output after 100,000 operating hours.
6. Powder coated aluminum fixture body.
7. Surface mount included
8. Low profile - Light weight
9. 99 Lumen output from 3.3 watts
10. 90 minute emergency runtime. 24 hour battery recharge time.

Superior LED Benefits

1. 100,000+ hour lifespan.
2. Can SAVE 50% or more on energy.
3. Qualifies retrofit projects for financial incentives, including utility rebates, tax credits and energy loan programs.
4. Reduces energy use and prolongs life-spans of peripheral cooling units (A/C, refrigeration)
5. 100% recyclable.
6. No toxins-lead, mercury.
7. No UV light, infrared radiation or CO2 emissions.
8. Qualifies buildings for LED and other sustainable business certifications.
9. Bright, even light maintains consistent color over time.
10. Instant on/off - No flickering, delays or buzzing.
11. Very good color rendering.
12. Vibration/impact resistant.
13. Significantly cooler operation.
14. Less frequent outages, higher output improves workplace safety.

Larson Electronics LLC
9419 E US HWY 175, Kemp, TX 75143
Phone: 800.369.6671

www.LarsonElectronics.com
Email: sales@LarsonElectronics.com
Fax: 903.498.3364

Frequently Asked Questions (FAQ)


EXIT


EXIT



Larson Electronics LLC
9419 E US HWY 175, Kemp, TX 75143
Phone: 800.369.6671

www.LarsonElectronics.com
Email: sales@LarsonElectronics.com
Fax: 903.498.3364

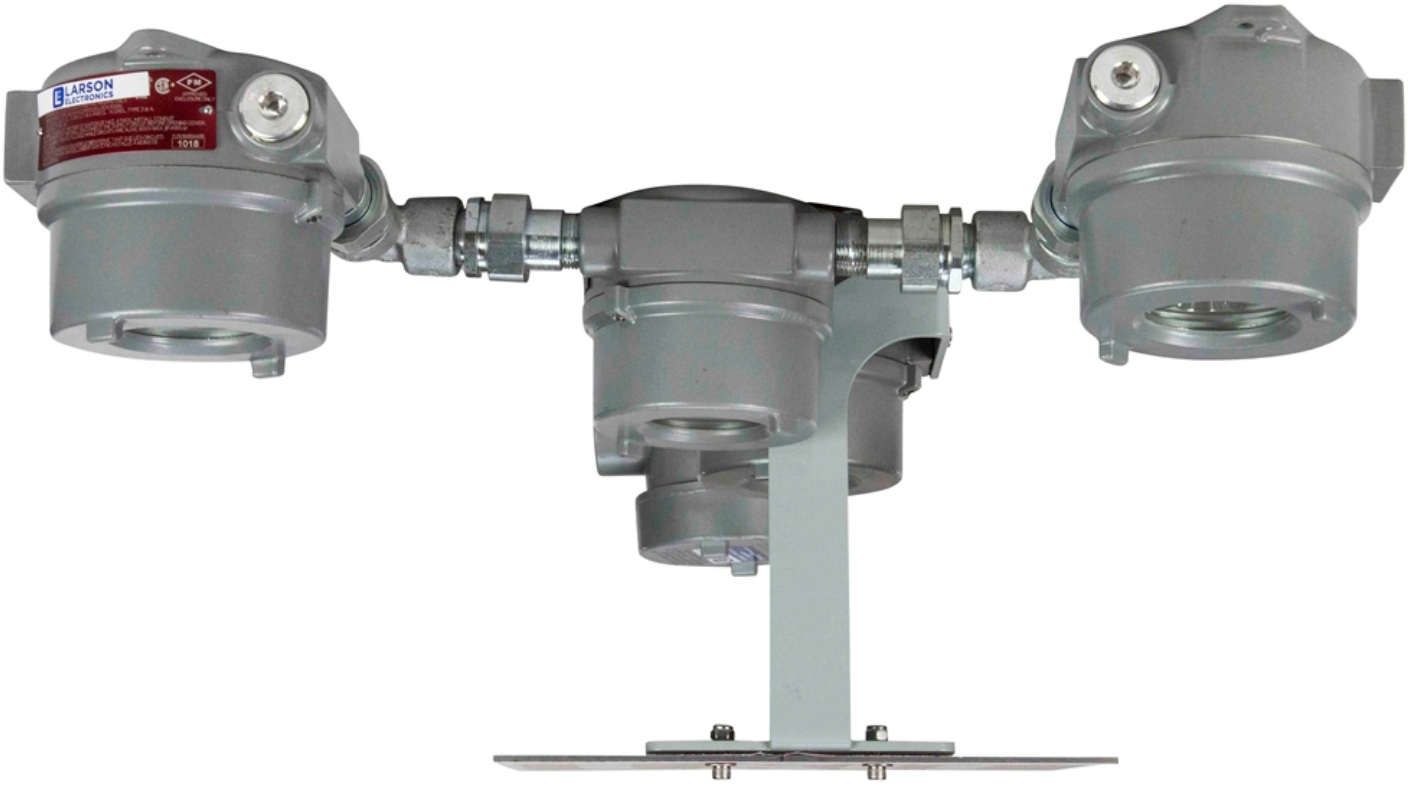

EXP-EMG-EXT-LE6-3L

Product ID: 148160

Export Control Classification Number (ECCN): EAR99

Links (Click on the below items to view):

- ATEX Certificate (European Explosion Proof)
- Beam Information (Coverage, Datafile)
- Canadian CEC Certificate (Commonly referred to as CSA Certificate)
- CE Certificate
- Certificate 1, Misc
- Certificate 2, Misc
- Certificate 3, Misc
- Certificate 4, Misc
- IEC Ex Certificate (International Explosion Proof)
- IES (Photometric File)
- MSDS (Material Safety Data Sheet
- Operations Manual
- Photometric Flood Report
- Photometric Indoor Report
- Photometric Polar Graph
- RoHS Certificate (Restriction of Hazardous Substances)
- SpecSheetSpanish
- USA NEC Certificate (Commonly referred to as UL Certificate)
- Wiring Diagram (Oneline)
- HigResPic1
- HigResPic2
- HigResPic3
- HigResPic4
- HigResPic5
- HigResPic6
- Video2
- ISO 9001 Certification
- Business Certificate
- Shipping Time Map