REV	DESCRIPTION	DATE
A	QUOTE	10/23/2026

MPD-CD5-CLP6.200AB-YT0-P-15.CLR5-M1

LARSON ELECTRONICS®

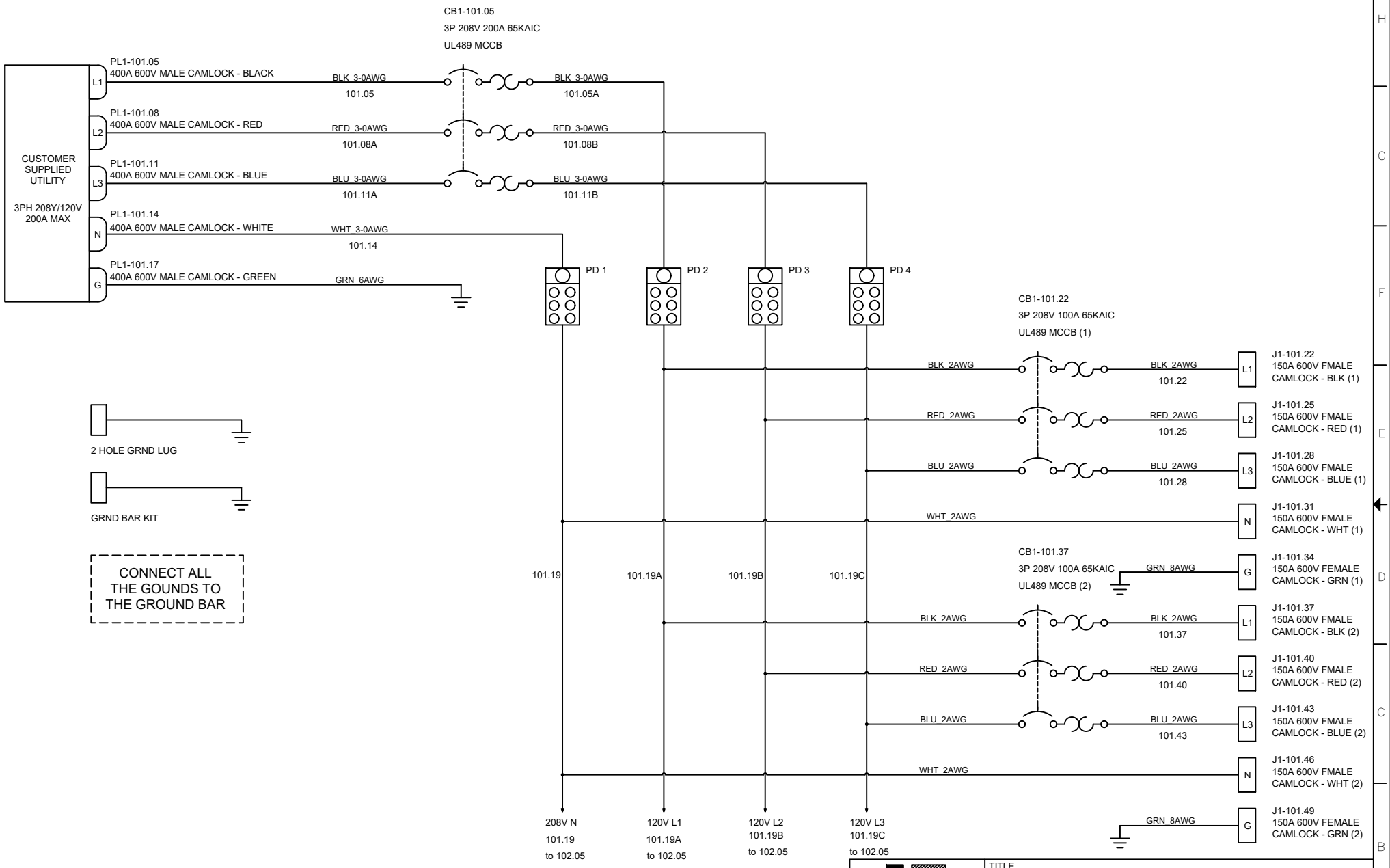

LARSON ELECTRONICS

9419 E US HWY 175,
KEMP, TX 75143

TITLE			
MPD-CD5-CLP6.200AB-YT0-P-15.CLR5-M1			
DRAWN BY	DATE	REV	
L.Calib	10-23-2026	A	
CHECKED BY	SHEET #	DRAWING #	
	1 OF 2	101	

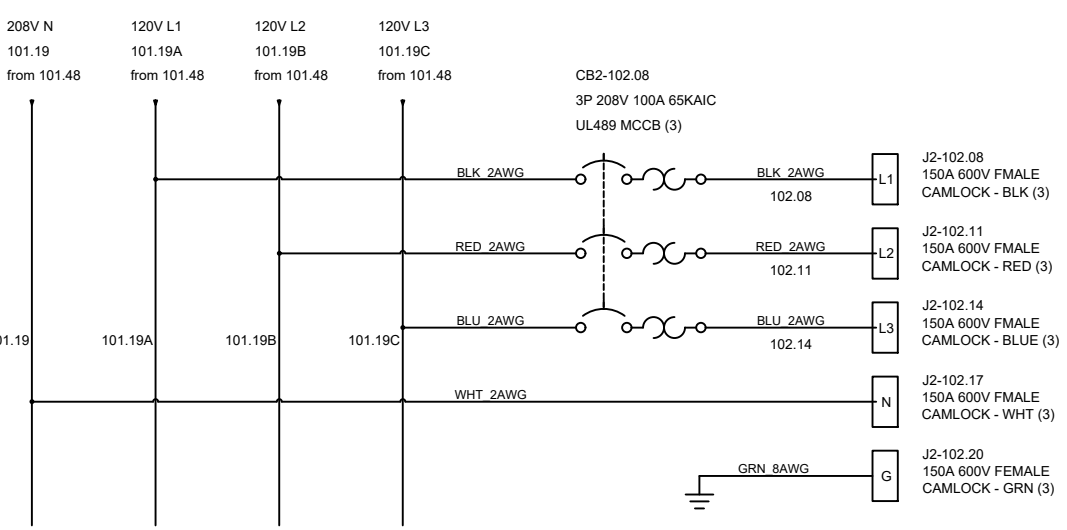

TAGS	QTY	CATALOG	DESCRIPTION
2 HOLE GRND LUG	1	UNV00007136	2 HOLE GROUND LUG
J1-101.31 J1-101.46 J2-102.17	3	UNV00002273	15R22 UW WHITE 600V 150A FEMALE PANEL RECEPTACLE CAM LOCKS #8-#2 Stud Term
PL1-101.14	1	UNV00002290	600V 400A MALE CAM LOCK WHITE
J1-101.34 J1-101.49 J2-102.20	3	UNV00008704	15R22 UG GREEN 600V 150A FEMALE PANEL RECEPTACLE CAM LOCKS #8-#2 Stud Term
PL1-101.05	1	UNV00008711	600V 400A MALE CAM LOCK BLACK
PL1-101.17	1	UNV00008712	600V 400A CAM LOCK GREEN
PL1-101.08	1	UNV00008715	600V 400A MALE CAM LOCK RED
J1-101.22 J1-101.37 J2-102.08	3	UNV00013729	15R22 UE BLACK 600V 150A FEMALE PANEL RECEPTACLE CAM LOCKS #8-#2 Stud Term
J1-101.25 J1-101.40 J2-102.11	3	UNV00013730	15R22 UR RED 600V 150A FEMALE PANEL RECEPTACLE CAM LOCKS #8-#2 Stud Term
J1-101.28 J1-101.43 J2-102.14	3	UNV00013731	15R22 UB BLUE 600V 150A FEMALE PANEL RECEPTACLE CAM LOCKS #8-#2 Stud Term
PL1-101.11	1	UNV00008710	600V 400A MALE CAM LOCK BLUE
CB1-101.05	1	UNV00014726	3P 200A 240/480V MCCB
CB1-101.22 CB1-101.37 CB2-102.08	3	UNV00014727	3P 100A 240/480VAC MCCB
PD 1 PD 2 PD 3 PD 4	4	UNV00016633	POWER DISTRIBUTION BLOCK 380A 1-6 OPENING
GRND BAR KIT	1	UNV00013942C	GROUND BAR KIT

LARSON ELECTRONICS
9419 E US HWY 175,
KEMP, TX 75143

TITLE			
MPD-CD5-CLP6.200AB-YT0-P-15.CLR5-M1			
DRAWN BY	DATE	REV	
L.Calib	10-23-2026	A	
CHECKED BY	SHEET #	DRAWING #	
	2 OF 2	102	