REV	DESCRIPTION	DATE
A	QUOTE	10/23/2026

MPD-CM5-309.30AB-DP15DE-DZ-1.E16-M1

LARSON ELECTRONICS®

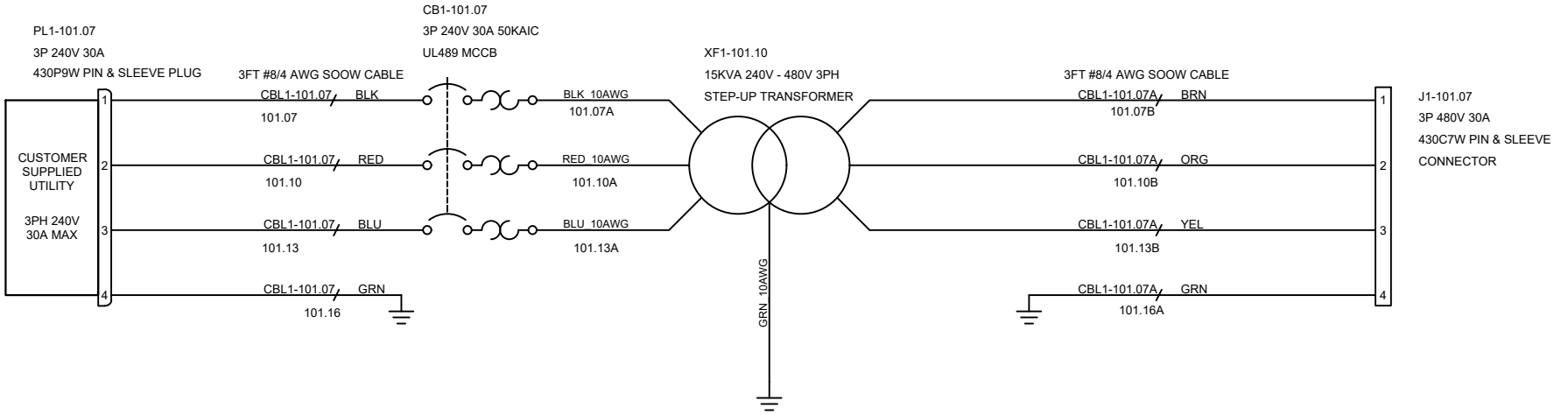

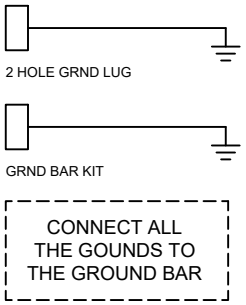

TAGS	QTY	CATALOG	DESCRIPTION
PL1-101.07	1	UNV00012016	IEC PLUG 430P9W 3P4W 30A 3PH 250V W/T
J1-101.07	1	UNV00023236	LEV CONN 480V 30A 3P4W Female Pin & Sleeve
CB1-101.07	1	UNV00015172	UTE100E FTU 30A 3P LL UL489 MCCB
2 HOLE GRND LUG	1	UNV00007136	2 HOLE GROUND LUG
GRND BAR KIT	1	UNV00013942C	GROUND BAR KIT
CBL1-101.07 CBL1-101.07A	2	UNV00007449	8/4 SOOW CABLE
XF1-101.10	1	UNV00013468	15KVA 240V - 480V 3PH TRANSFORMER

LARSON ELECTRONICS

9419 E US HWY 175,
KEMP, TX 75143

TITLE: MPD-CM5-309.30AB-DP15DE-DZ-1.E16-M1

DRAWN BY	DATE	REV
L.Calib	10-23-2026	A
CHECKED BY	SHEET #	DRAWING #
	1 OF 1	101