REV	DESCRIPTION	DATE
A	QUOTE	04/03/2026

MPD-CS5-CS.50AF-SZ0-Z-1.C04-3.L09-3.U3.L05-M1

LARSON ELECTRONICS®

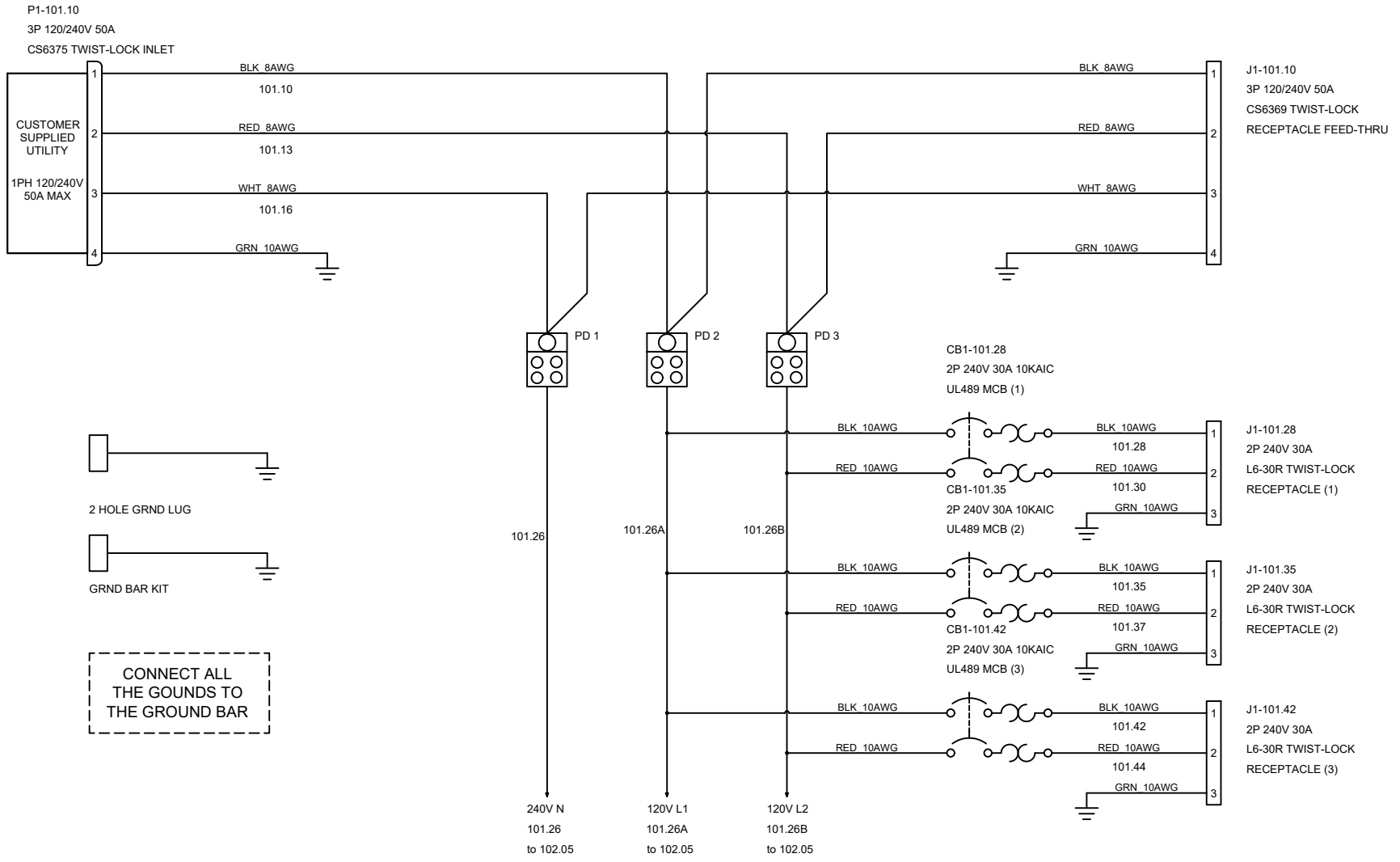

LARSON ELECTRONICS

9419 E US HWY 175,
KEMP, TX 75143

TITLE			
MPD-CS5-CS.50AF-SZ0-Z-1.C04-3.L09-3.U3.L05-M1			
DRAWN BY	DATE	REV	
L.Calib	04-03-2026	A	
CHECKED BY	SHEET #	DRAWING #	
	1 OF 2	101	

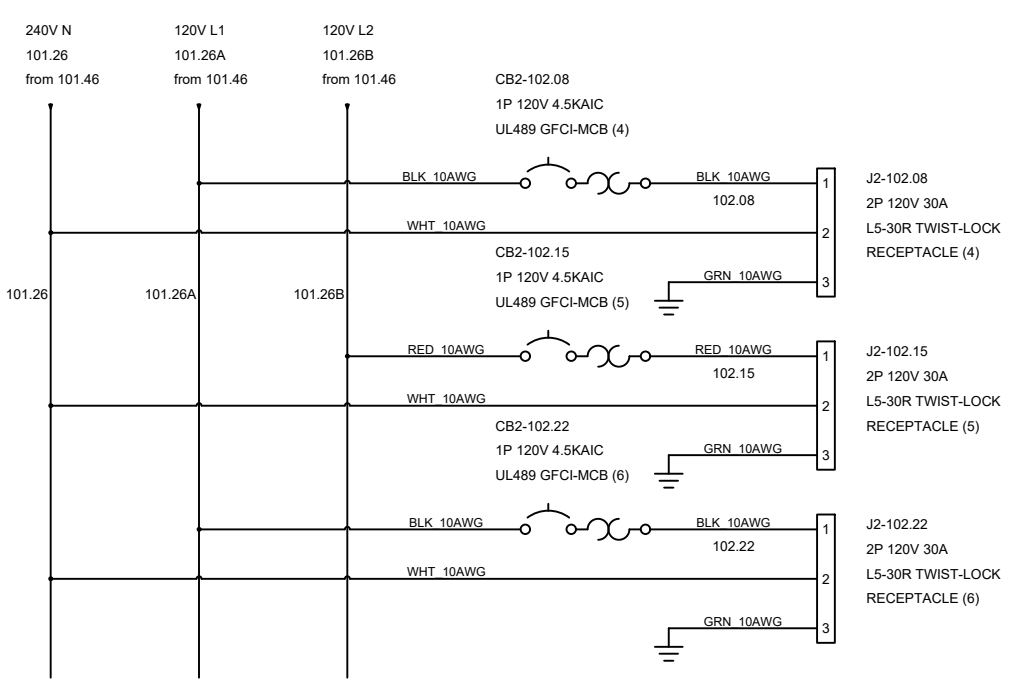

TAGS	QTY	CATALOG	DESCRIPTION
J1-101.10	1	UNV00008818	CS6369 50A 250V 3P RECEPTACLE
J2-102.08 J2-102.15 J2-102.22	3	UNV00008907	125V 30A LOCK RING RECEPTACLE
J1-101.28 J1-101.35 J1-101.42	3	UNV00016830	L6-30R COVER AND RECEPTACLE
2 HOLE GRND LUG	1	UNV00007136	2 HOLE GROUND LUG
P1-101.10	1	UNV00013600	3P 4W 50A 125/250V LOCK RING CS6375 FLANGED INLET
CB1-101.28 CB1-101.35 CB1-101.42	3	UNV00017628	2P 240V 30A UL489 CIRCUIT BREAKER
CB2-102.08 CB2-102.15 CB2-102.22	3		1P 30A 125V GFI BREKAER
PD 1 PD 2 PD 3	3	UNV00015084	POWER DISTRIBUTION BLOCK 175 A 600V 1-4 OPENING
GRND BAR KIT	1	UNV00013942C	GROUND BAR KIT

LARSON ELECTRONICS
9419 E US HWY 175,
KEMP, TX 75143

TITLE			
MPD-CS5-CS.50AF-SZ0-Z-1.C04-3.L09-3.U3.L05-M1			
DRAWN BY	DATE	REV	
L.Calib	04-03-2026	A	
CHECKED BY	SHEET #	DRAWING #	
	2 OF 2	102	