REV	DESCRIPTION	DATE
A	QUOTE	01/26/2026

MPD-CS3-CLP6.200AF-YT0-Z-5.CLR6-5.C04-1.N10-M1

LARSON ELECTRONICS®

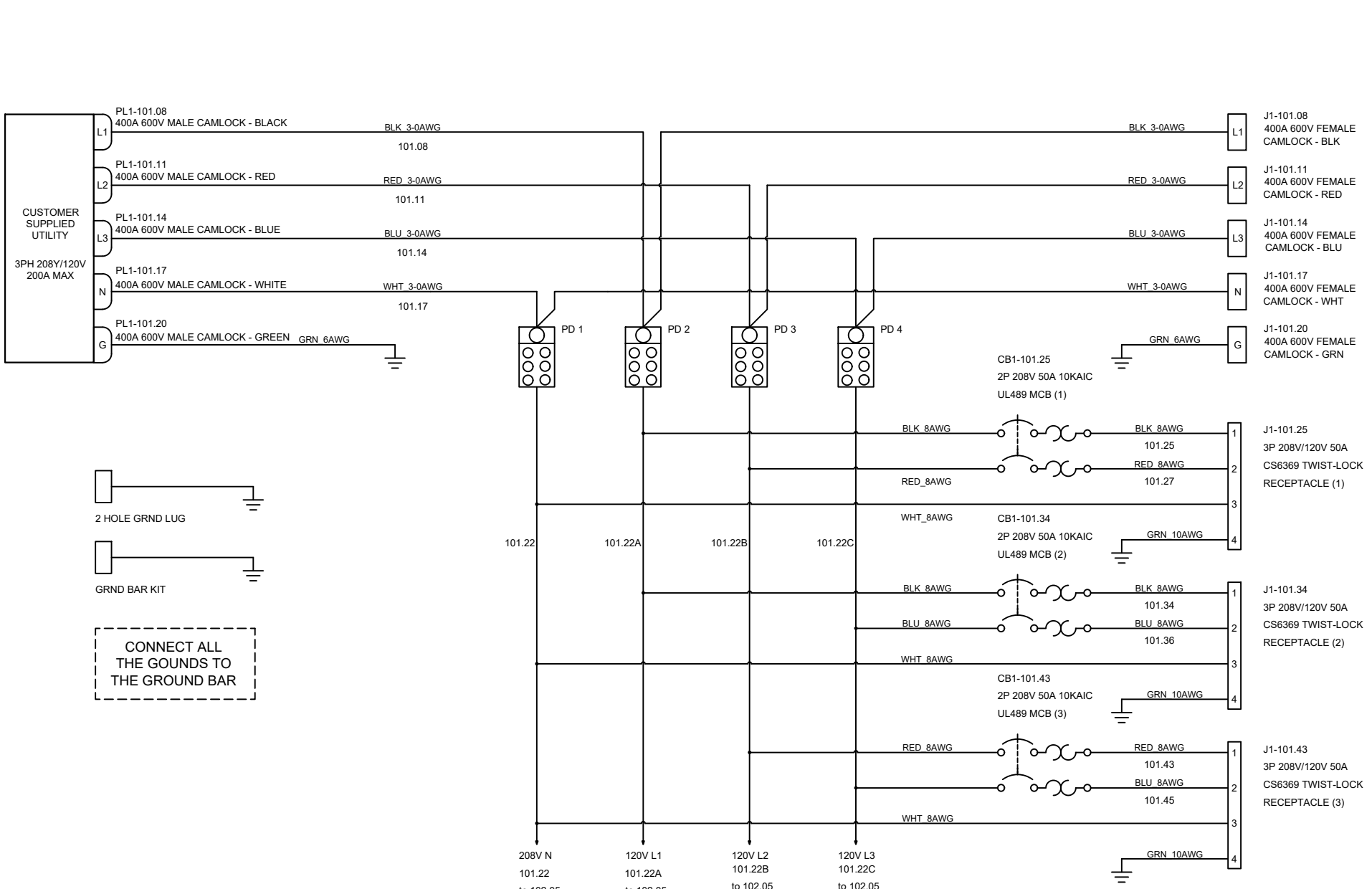

LARSON ELECTRONICS 9419 E US HWY 175, KEMP, TX 75143	TITLE: MPD-CS3-CLP6.200AF-YT0-Z-5.CLR6-5.C04-1.N10-M1		
	DRAWN BY: L.Calib	DATE: 01-26-2026	REV: A
	CHECKED BY:	SHEET #: 1 OF 3	DRAWING #: 101

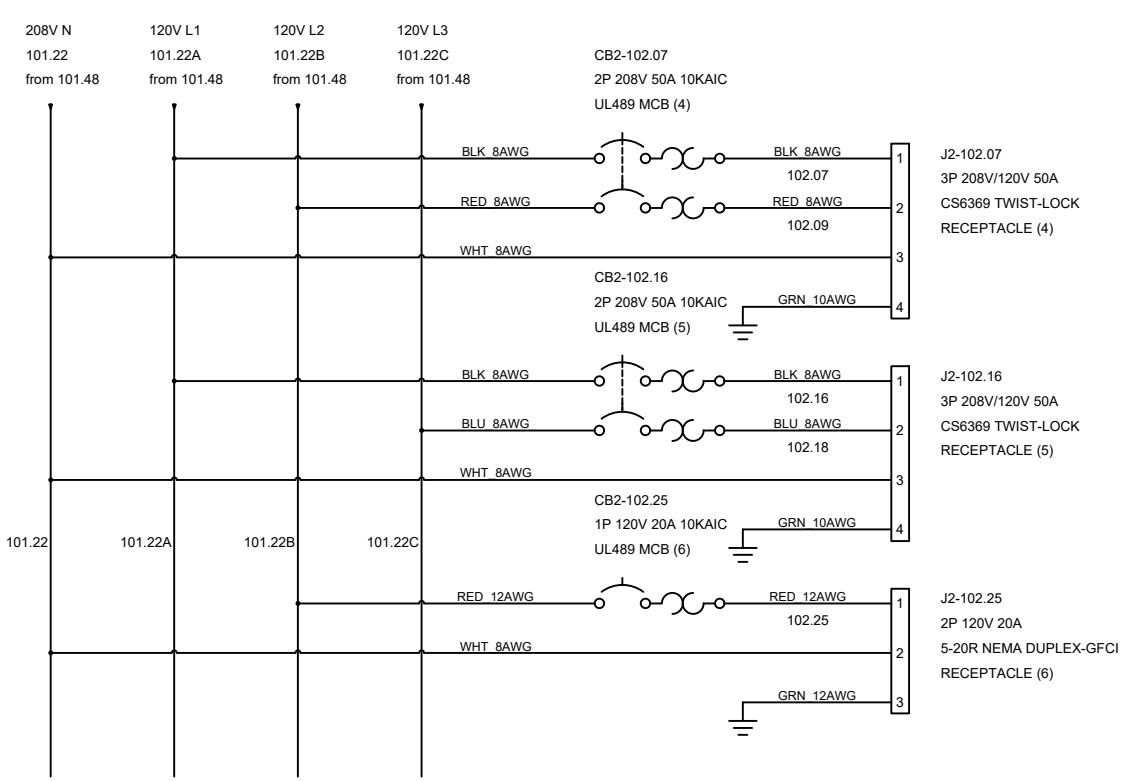

LARSON ELECTRONICS 9419 E US HWY 175, KEMP, TX 75143	TITLE: MPD-CS3-CLP6.200AF-YT0-Z-5.CLR6-5.C04-1.N10-M1		
	DRAWN BY: L.Calib	DATE: 01-26-2026	REV: A
	CHECKED BY:	SHEET #: 2 OF 3	DRAWING #: 102

TAGS	QTY	CATALOG	DESCRIPTION
J1-101.25 J1-101.34 J1-101.43 J2-102.07 J2-102.16	5	UNV00008818	CS6369 50A 250V 3P RECEPTACLE
2 HOLE GRND LUG	1	UNV00007136	2 HOLE GROUND LUG
PL1-101.17	1	UNV00002290	600V 400A MALE CAM LOCK WHITE
PL1-101.08	1	UNV00008711	600V 400A MALE CAM LOCK BLACK
PL1-101.20	1	UNV00008712	600V 400A CAM LOCK GREEN
PL1-101.11	1	UNV00008715	600V 400A MALE CAM LOCK RED
J1-101.20	1	UNV00013752	600V UPTO 400A #2-4/0 AWG WHT FEMALE CAM LOCK RECEPTACLE
J1-101.08	1	UNV00013753	600V UPTO 400A #2-4/0 AWG BLK FEMALE CAM LOCK RECEPTACLE
J2-102.25	1	UNV00014533	5-20R 1P 20A 125V GFCI RECEPTACLE
PL1-101.14	1	UNV00008710	600V 400A MALE CAM LOCK BLUE
J1-101.11	1	UNV00013755	600V UPTO 400A #2-4/0 AWG RED FEMALE CAM LOCK RECEPTACLE
J1-101.14	1	UNV00013756	600V UPTO 400A #2-4/0 AWG BLU FEMALE CAM LOCK RECEPTACLE
J1-101.17	1	UNV00013758	600V UPTO 400A #2-4/0 AWG GRN FEMALE CAM LOCK RECEPTACLE
CB1-101.25 CB1-101.34 CB1-101.43 CB2-102.07 CB2-102.16	5	UNV00014731	2P 250V 50A DIN RAIL MOUNT MCCB UL489
CB2-102.25	1	UNV00017491	1P 125V 20A 10KA UL489 DIN RAIL MOUNT BREAKER
PD 1 PD 2 PD 3 PD 4	4	UNV00016633	POWER DISTRIBUTION BLOCK 380A 1-6 OPENING
GRND BAR KIT	1	UNV00013942C	GROUND BAR KIT

LARSON ELECTRONICS
9419 E US HWY 175,
KEMP, TX 75143

TITLE: MPD-CS3-CLP6.200AF-YT0-Z-5.CLR6-5.C04-1.N10-M1

DRAWN BY	DATE	REV
L.Calib	01-26-2026	A
CHECKED BY	SHEET #	DRAWING #
	3 OF 3	103