REV	DESCRIPTION	DATE
A	QUOTE	05/01/2025

MPD-EB10-TB.100AB-DE0-L-1.R60-3.R42-3.R10-N3R-M1

LARSON ELECTRONICS®

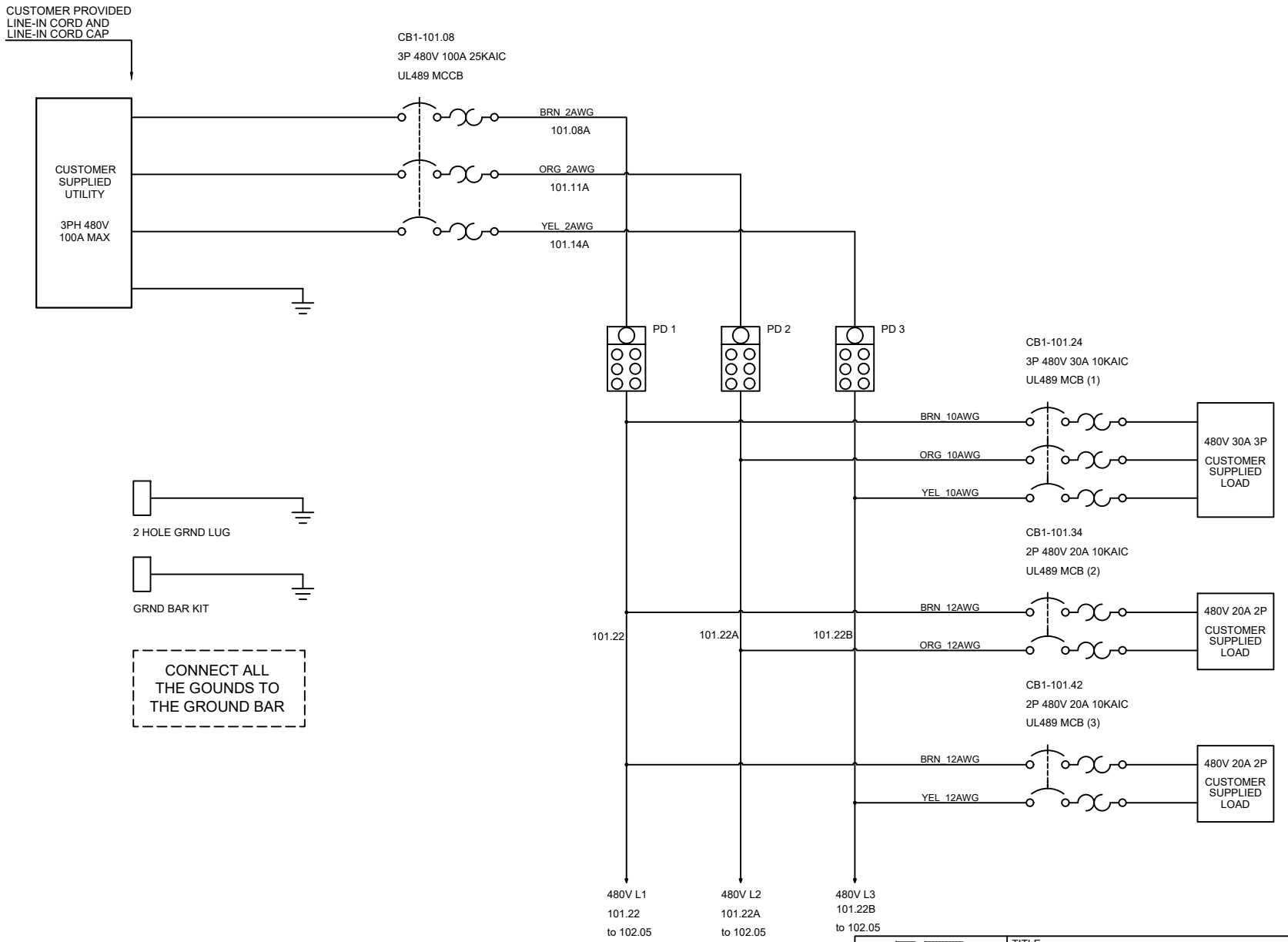

LARSON ELECTRONICS

9419 E US HWY 175,
KEMP, TX 75143

TITLE			
MPD-EB10-TB.100AB-DE0-L-1.R60-3.R42-3.R10-N3R-M1			
DRAWN BY	DATE	REV	
L.Calib	05-01-2025	A	
CHECKED BY	SHEET #	DRAWING #	
	1 OF 2	101	

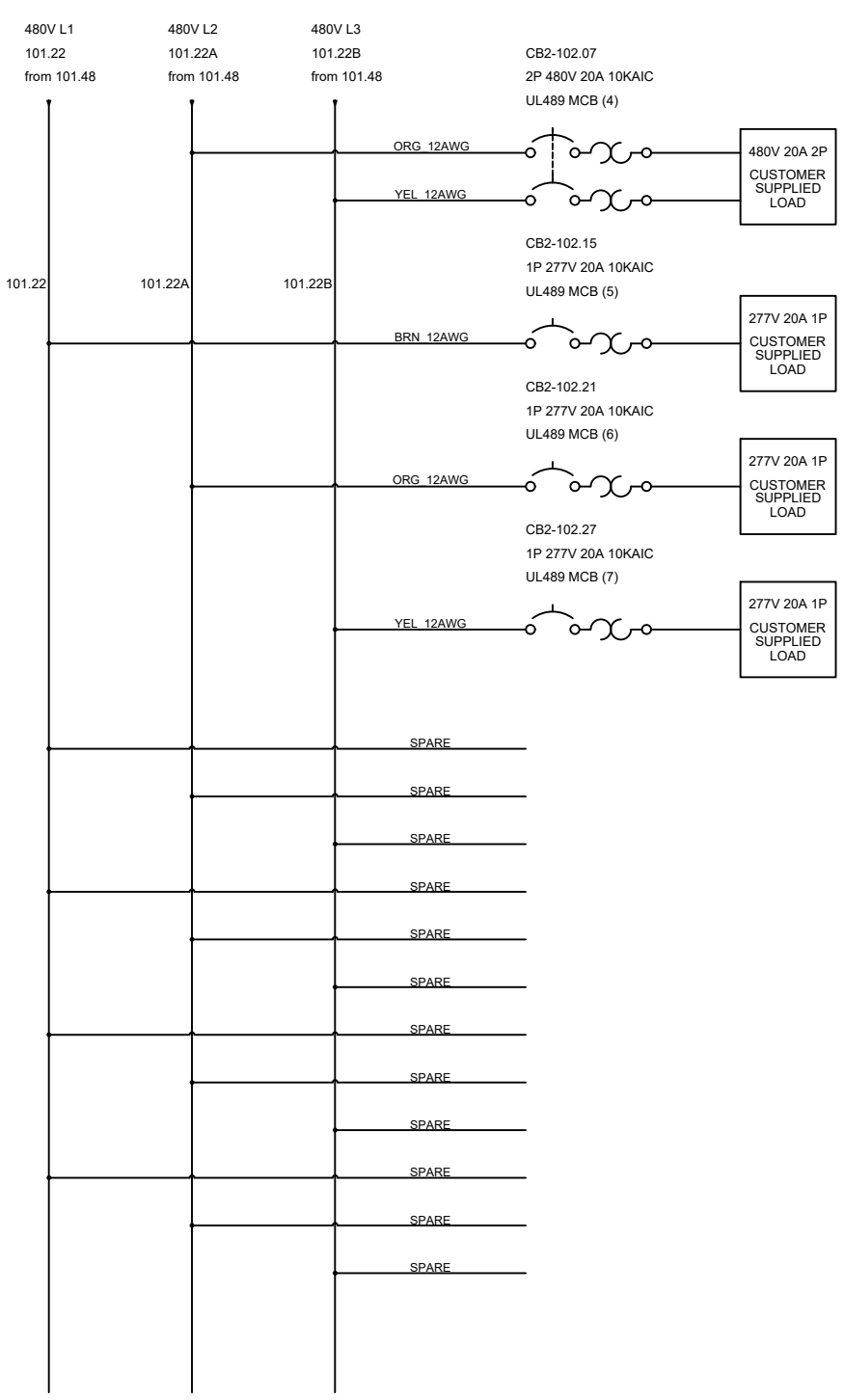

TAGS	QTY	CATALOG	DESCRIPTION
2 HOLE GRND LUG	1	UNV00007136	2 HOLE GROUND LUG
CB1-101.24	1	UNV00017374	3P 30A 480V UL489 DIN RAIL MCB
CB2-102.15 CB2-102.21 CB2-102.27	3	UNV00019746	1P 277V 20A 10KA UL489 DIN RAIL BREAKER
CB1-101.08	1	UNV00014727	3P 100A 240/480VAC MCCB
CB1-101.34 CB1-101.42 CB2-102.07	3		2P 20A 480V UL489 DIN RAIL MCB
PD 1 PD 2 PD 3	3	UNV00016633	POWER DISTRIBUTION BLOCK 380A 1-6 OPENING
GRND BAR KIT	1	UNV00013942C	GROUND BAR KIT

LARSON ELECTRONICS

9419 E US HWY 175,
KEMP, TX 75143

TITLE: MPD-EB10-TB.100AB-DE0-L-1.R60-3.R42-3.R10-N3R-M1

DRAWN BY	DATE	REV
L.Calib	05-01-2025	A
CHECKED BY	SHEET #	DRAWING #
	2 OF 2	102