REV	DESCRIPTION	DATE
A	QUOTE	01/25/2024

MPD-CM5-BS.30AB-SE10SZ-GZ-1.N10-M1

LARSON ELECTRONICS®

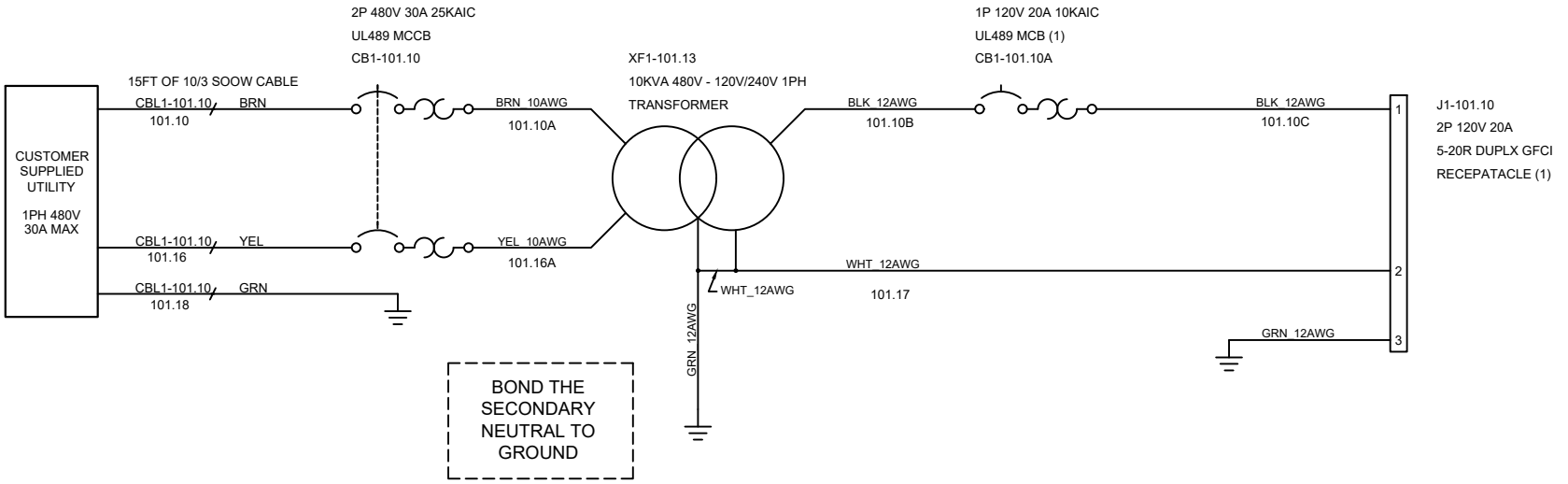

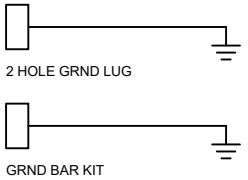

CONNECT ALL THE GOUNDS TO THE GROUND BAR

TAGS	QTY	CATALOG	DESCRIPTION
2 HOLE GRND LUG	1	UNV00007136	2 HOLE GROUND LUG
J1-101.10	1	UNV00014533	5-20R 1P 20A 125V GFCI RECEPTACLE
CB1-101.10	1	UNV00015151	2P 480V/240V 30A MCCB UL489
CB1-101.10A	1	UNV00017491	1P 125V 20A 10KA UL489 DIN RAIL MOUNT BREAKER
GRND BAR KIT	1	UNV00013942C	GROUND BAR KIT
CBL1-101.10	1	UNV00007525	10/3 SOOW CABLE
XF1-101.13	1	UNV00013878	480V to 240/120V1PH 10KVA TRANSOFRMER

LARSON ELECTRONICS
9419 E US HWY 175,
KEMP, TX 75143

TITLE: MPD-CM5-BS.30AB-SE10SZ-GZ-1.N10-M1

DRAWN BY	DATE	REV
L.Calib	01-25-2025	A
CHECKED BY	SHEET #	DRAWING #
	1 OF 1	101