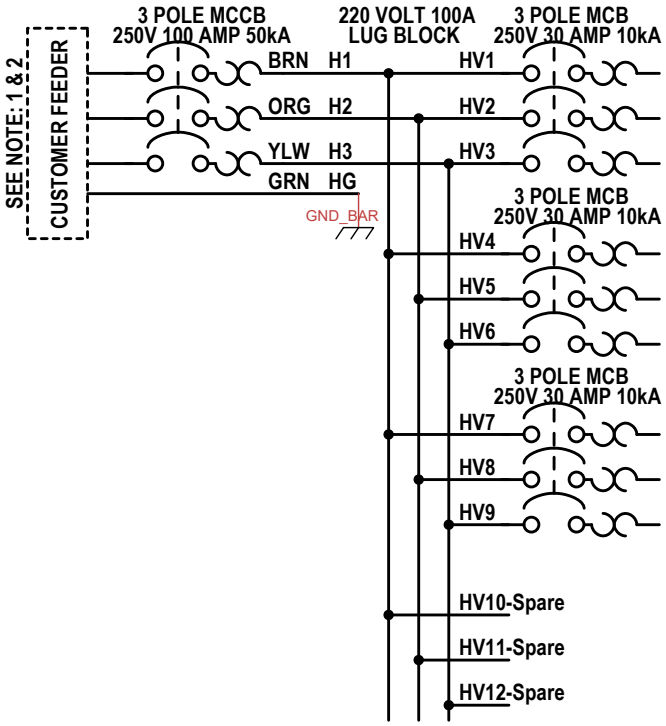

WIRE LEGEND

ID	TYPE	DESCRIPTION	WIRE SIZE
H1	CABLE	600V THHN BROWN	#2 AWG cu
H2	CABLE	600V THHN ORANGE	#2 AWG cu
H3	CABLE	600V THHN YELLOW	#2 AWG cu
HG	CABLE	600V THHN GREEN	#8 AWG cu
HV1	CABLE	600V THHN BROWN	#10 AWG cu
HV2	CABLE	600V THHN ORANGE	#10 AWG cu
HV3	CABLE	600V THHN YELLOW	#10 AWG cu
HV4	CABLE	600V THHN BROWN	#10 AWG cu
HV5	CABLE	600V THHN ORANGE	#10 AWG cu
HV6	CABLE	600V THHN YELLOW	#10 AWG cu
HV7	CABLE	600V THHN BROWN	#10 AWG cu
HV8	CABLE	600V THHN ORANGE	#10 AWG cu
HV9	CABLE	600V THHN YELLOW	#10 AWG cu
HVG1-3	CABLE	600V THHN GREEN	#10 AWG cu
HVG4-6	CABLE	600V THHN GREEN	#10 AWG cu
HVG7-9	CABLE	600V THHN GREEN	#10 AWG cu

USER NOTES:

1) USE MINIMUM 600V 100A WIRING
2) USE MINIMUM 220V 3PH 100A INPUT SERVICE DEVICE

Title: MPD-EB8-TB.100AB-DR0-LZ-3.R61-N3R-H1		
Author: David Downs		
File: ↄ: ... 220V 100A 3PH MCB 3x3P30A Inlet=TB.dsn		Document
Revision: 1.0	Date: 02/08/2024	Sheets: 1 of 1