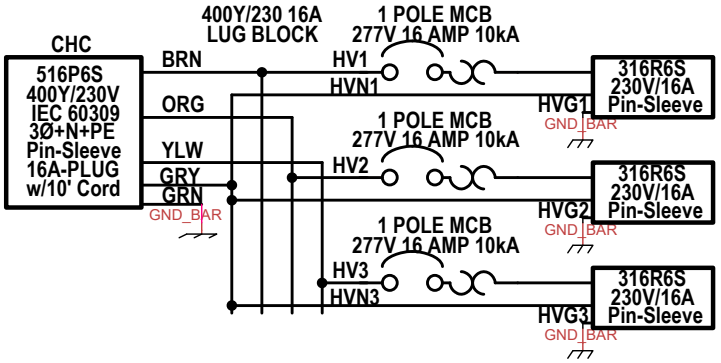

WIRE LEGEND

ID	TYPE	DESCRIPTION	WIRE SIZE
CHC	CORD	600V TYPE SOOW	#14/5 AWG cu
HV1	CABLE	600V THHN BROWN	#14 AWG cu
HV2	CABLE	600V THHN ORANGE	#14 AWG cu
HV3	CABLE	600V THHN YELLOW	#14 AWG cu
HVG1	CABLE	600V THHN GREEN	#14 AWG cu
HVG2	CABLE	600V THHN GREEN	#14 AWG cu
HVG3	CABLE	600V THHN GREEN	#14 AWG cu
HVN1	CABLE	600V THHN GRAY	#14 AWG cu
HVN2	CABLE	600V THHN GRAY	#14 AWG cu
HVN3	CABLE	600V THHN GRAY	#14 AWG cu

Title: MPD-CM2-308.16AB-YK0-Z-3.R10-3.E72S-M1		
Author: David Downs		
File: :30V 16A 3PH MLO 3x316R6S 10'C+516P6S.dsn		Document
Revision: 1.0	Date: 01/23/2024	Sheets: 1 of 1