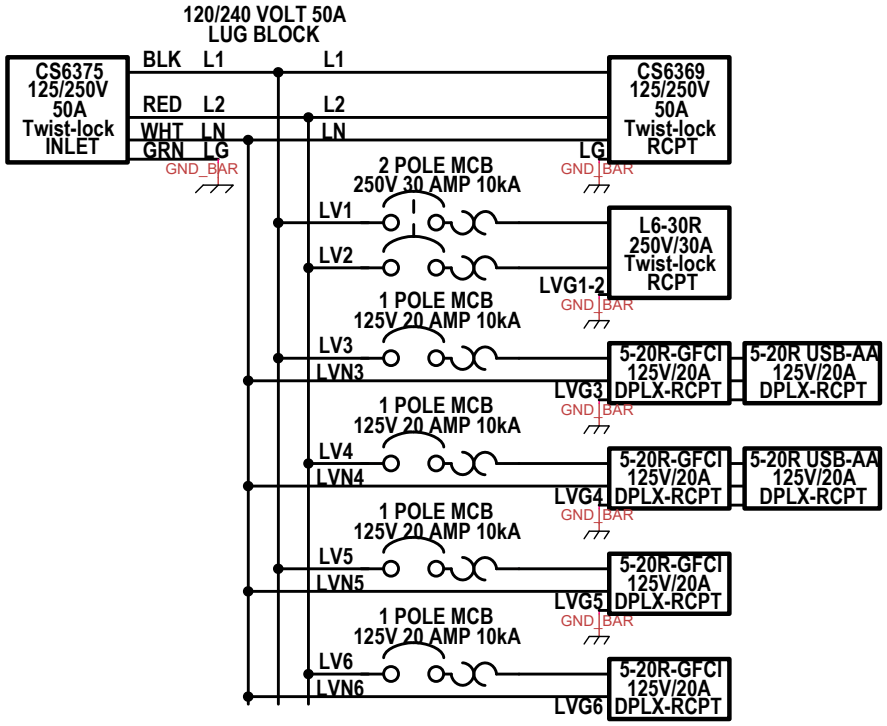


## WIRE LEGEND

| ID | TYPE | DESCRIPTION | WIRE SIZE |
|---|---|---|---|
| L1 | CABLE | 600V THHN BLACK | #8 AWG cu |
| L2 | CABLE | 600V THHN RED | #8 AWG cu |
| LG | CABLE | 600V THHN GREEN | #10 AWG cu |
| LN | CABLE | 600V THHN WHITE | #8 AWG cu |
| LV1 | CABLE | 600V THHN BLACK | #10 AWG cu |
| LV2 | CABLE | 600V THHN RED | #10 AWG cu |
| LV3 | CABLE | 600V THHN BLACK | #12 AWG cu |
| LV4 | CABLE | 600V THHN RED | #12 AWG cu |
| LV5 | CABLE | 600V THHN BLACK | #12 AWG cu |
| LV6 | CABLE | 600V THHN RED | #12 AWG cu |
| LVG1-2 | CABLE | 600V THHN GREEN | #10 AWG cu |
| LVG3 | CABLE | 600V THHN GREEN | #12 AWG cu |
| LVG4 | CABLE | 600V THHN GREEN | #12 AWG cu |
| LVG5 | CABLE | 600V THHN GREEN | #12 AWG cu |
| LVG6 | CABLE | 600V THHN GREEN | #12 AWG cu |
| LVN3 | CABLE | 600V THHN WHITE | #12 AWG cu |
| LVN4 | CABLE | 600V THHN WHITE | #12 AWG cu |
| LVN5 | CABLE | 600V THHN WHITE | #12 AWG cu |
| LVN6 | CABLE | 600V THHN WHITE | #12 AWG cu |

| | | |
|---|---|---|
| Title: MPD-CS2-CS.50AF-SZ0-ZZ-1.C04-1.L09-4.N10-2.USB-M1 | | |
| Author: David Downs | | |
| File: 0A 1PH MLO 1xCS6369 1xL6-30R 3x5-20R GFC | | Document |
| Revision: 1.0 | Date: 03/31/2023 | Sheets: 1 of 1 |