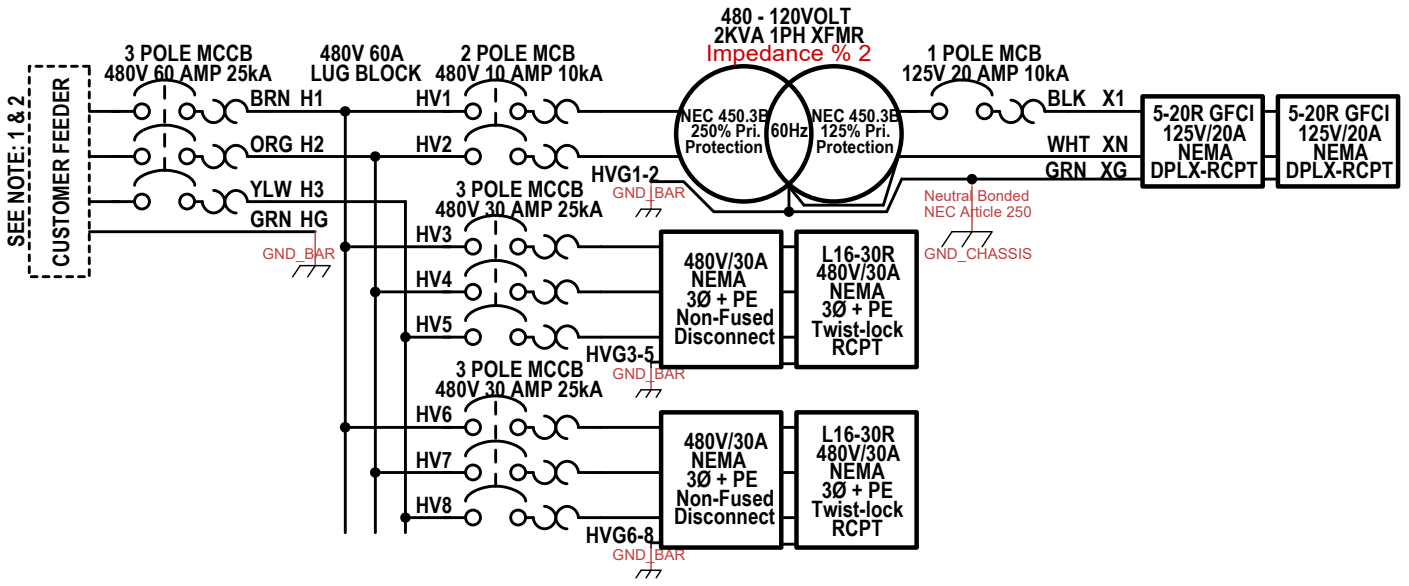

WIRE LEGEND

ID	TYPE	DESCRIPTION	WIRE SIZE
H1	CABLE	600V THHN BROWN	#6 AWG cu
H2	CABLE	600V THHN ORANGE	#6 AWG cu
H3	CABLE	600V THHN YELLOW	#6 AWG cu
HG	CABLE	600V THHN GREEN	#10 AWG cu
HV1	CABLE	600V THHN BROWN	#12 AWG cu
HV2	CABLE	600V THHN ORANGE	#12 AWG cu
HV3	CABLE	600V THHN YELLOW	#10 AWG cu
HV4	CABLE	600V THHN BROWN	#10 AWG cu
HV5	CABLE	600V THHN ORANGE	#10 AWG cu
HV6	CABLE	600V THHN YELLOW	#10 AWG cu
HV7	CABLE	600V THHN BROWN	#10 AWG cu
HV8	CABLE	600V THHN ORANGE	#10 AWG cu
HVG1-2	CABLE	600V THHN GREEN	#12 AWG cu
HVG3-5	CABLE	600V THHN GREEN	#10 AWG cu
HVG6-8	CABLE	600V THHN GREEN	#10 AWG cu
X1	CABLE	600V THHN BLACK	#12 AWG cu
XN	CABLE	600V THHN WHITE	#12 AWG cu
XG	CABLE	600V THHN GREEN	#12 AWG cu

USER NOTES:

1) USE MINIMUM 600V 60A WIRING
2) USE MINIMUM 480V 60A INPUT SERVICE DEVICE

IEC 60076 permits +/- 10% tolerance in percentage impedance at the manufacturer's end.

Title MPD-EB4-TB.60AB-DE2SW-GC-2.Q0.L27-2.N10-M1-N1		
Author David Downs		
File 3PH 2KVA 120V 20.8A 1PH MCB 2xL16-30R 2x5		Document
Revision 1.0	Date 02/28/2023	Sheets 1 of 1