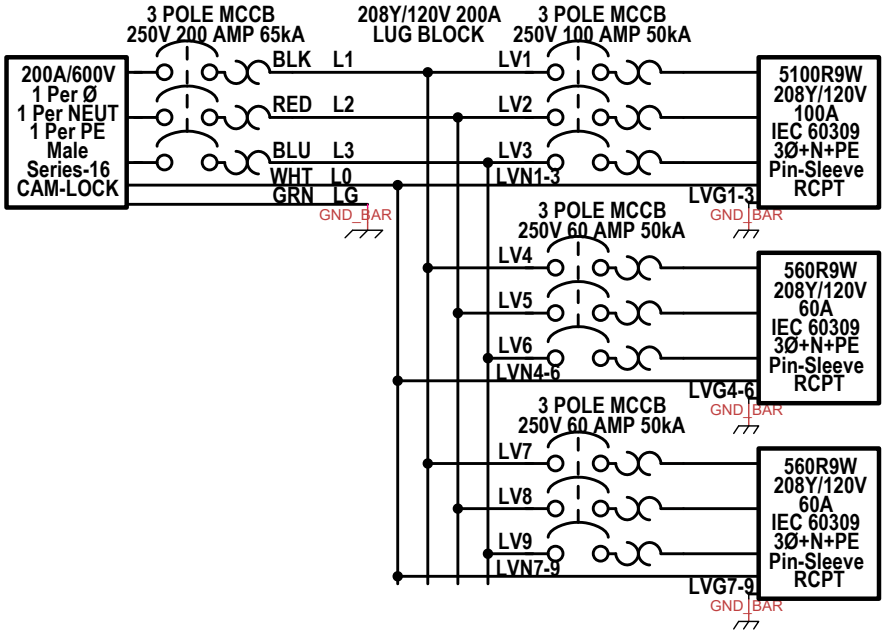

WIRE LEGEND

ID	TYPE	DESCRIPTION	WIRE SIZE
L1	CABLE	600V THHN BLACK	#3/0 AWG cu
L2	CABLE	600V THHN RED	#3/0 AWG cu
L3	CABLE	600V THHN BLUE	#3/0 AWG cu
L0	CABLE	600V THHN WHITE	#3/0 AWG cu
LG	CABLE	600V THHN GREEN	#6 AWG cu
LV1	CABLE	600V THHN BLACK	#2 AWG cu
LV2	CABLE	600V THHN RED	#2 AWG cu
LV3	CABLE	600V THHN BLUE	#2 AWG cu
LV4	CABLE	600V THHN BLACK	#6 AWG cu
LV5	CABLE	600V THHN RED	#6 AWG cu
LV6	CABLE	600V THHN BLUE	#6 AWG cu
LV7	CABLE	600V THHN BLACK	#6 AWG cu
LV8	CABLE	600V THHN RED	#6 AWG cu
LV9	CABLE	600V THHN BLUE	#6 AWG cu
LVN1-3	CABLE	600V THHN WHITE	#2 AWG cu
LVN4-6	CABLE	600V THHN WHITE	#6 AWG cu
LVN7-9	CABLE	600V THHN WHITE	#6 AWG cu
LVG1-3	CABLE	600V THHN GREEN	#8 AWG cu
LVG4-6	CABLE	600V THHN GREEN	#10 AWG cu
LVG7-9	CABLE	600V THHN GREEN	#10 AWG cu

Title: MPD-CS2-CLP6.200AB-YT0-P-1.E38-2.E28-M1		
Author: David Downs		
File: 200A 3PH MCB 1x5100R9W 2x560R9W Inlet=5x		Document
Revision: 1.0	Date: 12/21/2022	Sheets: 1 of 1