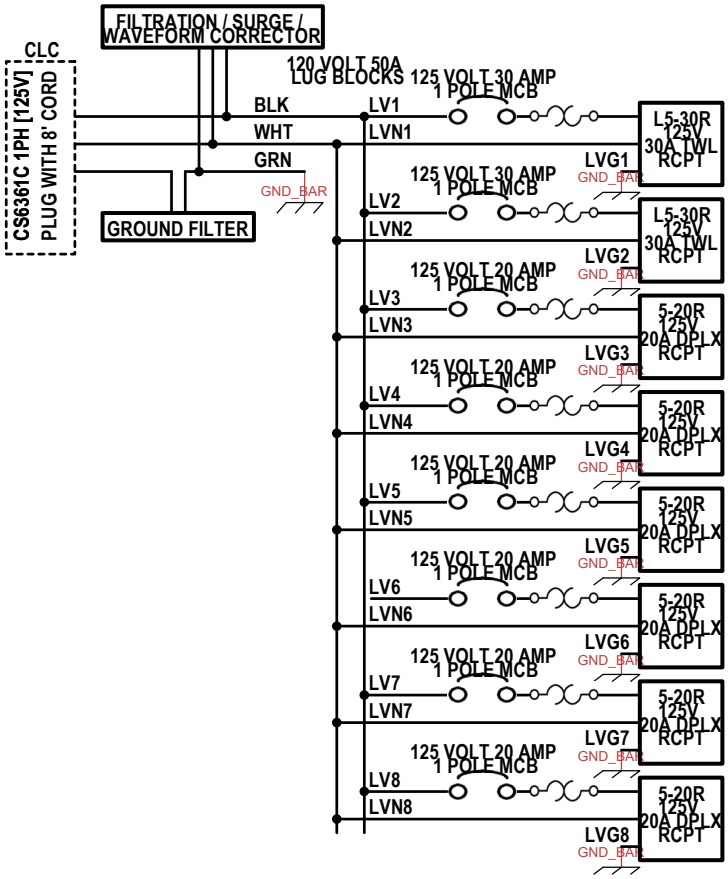

WIRE LEGEND

ID	TYPE	DESCRIPTION	WIRE SIZE
CLC	CORD	600V TYPE SOOW	#8/3 AWG cu
LV1	CABLE	600V THHN BLACK	#10 AWG cu
LV2	CABLE	600V THHN BLACK	#10 AWG cu
LV3	CABLE	600V THHN BLACK	#12 AWG cu
LV4	CABLE	600V THHN BLACK	#12 AWG cu
LV5	CABLE	600V THHN BLACK	#12 AWG cu
LV6	CABLE	600V THHN BLACK	#12 AWG cu
LV7	CABLE	600V THHN BLACK	#12 AWG cu
LV8	CABLE	600V THHN BLACK	#12 AWG cu
LVG1	CABLE	600V THHN GREEN	#10 AWG cu
LVG2	CABLE	600V THHN GREEN	#10 AWG cu
LVG3	CABLE	600V THHN GREEN	#12 AWG cu
LVG4	CABLE	600V THHN GREEN	#12 AWG cu
LVG5	CABLE	600V THHN GREEN	#12 AWG cu
LVG6	CABLE	600V THHN GREEN	#12 AWG cu
LVG7	CABLE	600V THHN GREEN	#12 AWG cu
LVG8	CABLE	600V THHN GREEN	#12 AWG cu
LVN1	CABLE	600V THHN WHITE	#10 AWG cu
LVN2	CABLE	600V THHN WHITE	#10 AWG cu
LVN3	CABLE	600V THHN WHITE	#12 AWG cu
LVN4	CABLE	600V THHN WHITE	#12 AWG cu
LVN5	CABLE	600V THHN WHITE	#12 AWG cu
LVN6	CABLE	600V THHN WHITE	#12 AWG cu
LVN7	CABLE	600V THHN WHITE	#12 AWG cu
LVN8	CABLE	600V THHN WHITE	#12 AWG cu

Title: MPD-SR-CS.50AB-SV0SV-ZZ-1.WFC-2.L05-6.N09-M1		
Author: David Downs		
File: A 1PH 6x5-20R 2xL5-30R 8'C with CS6361C & W		Document
Revision: 1.0	Date: 02/22/2021	Sheets: 1 of 1