REV	DESCRIPTION	DATE
A	QUOTE	04/04/2026

MPD-CW11-TB.100AB-DE75YT-LZ-3.T24-M1

LARSON ELECTRONICS®

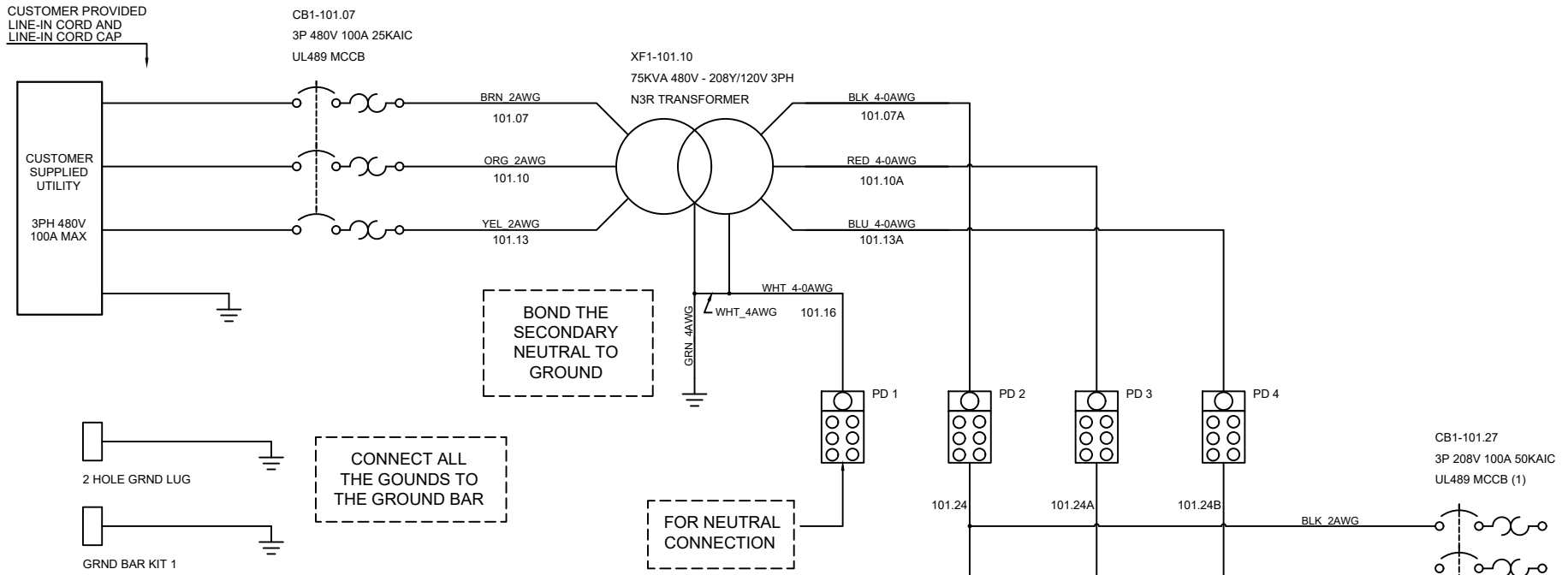

TAGS	QTY	CATALOG	DESCRIPTION
2 HOLE GRND LUG	1	UNV00007136	2 HOLE GROUND LUG
CB1-101.07 CB1-101.27 CB1-101.36 CB1-101.45	4	UNV00014727	3P 100A 240/480VAC MCCB
PD 1 PD 2 PD 3 PD 4	4	UNV00016633	POWER DISTRIBUTION BLOCK 380A 1-6 OPENING
GRND BAR KIT 1	1	UNV00013942C	GROUND BAR KIT
XF1-101.10	1	UNV00001275	480DTO 208Y 75KVA TRANSFORMER

LARSON ELECTRONICS
9419 E US HWY 175,
KEMP, TX 75143

TITLE			
MPD-CW11-TB.100AB-DE75YT-LZ-3.T24-M1			
DRAWN BY	DATE	REV	
L.Calib	04-04-2026	A	
CHECKED BY	SHEET #	DRAWING #	
	1 OF 1	101	