Larson Electronics LLC **www.LarsonElectronics.com** **sales@larsonelectronics.com**
9419 E US HWY 175, Kemp, TX 75143 - P: (800) 369-6671 - F: (903) 498-3364

LEDL-160W-1227

Installation

White: Neutral **Black:** Line **Green:** Safety Ground

The ground (green) conductor is not internally connected to either the neutral (white) or line (black) conductors. The ground conductor must be connected to a suitable safety ground in compliance with applicable electrical codes. The electrical supply must be externally protected by a fuse or circuit breaker suitable for the intended operating current.

Light Head Assembly

The light head assembly is designed for OEM use. This light requires an area of 14" x 5 ½" for mounting. Make sure adequate space is available on the mounting surface before drilling holes. Drill a ½" through hole in the center of the mounting position for the power wires to pass. This light arrives with 4 temporary plastic wing nuts on each of the 4 corner bolts. Remove the wiring nuts and use the 4 remaining 10-24 machine screws with your choice of nuts or replace the 4 corner bolts with your choice of #10 tapping screws. (Stainless Steel hardware is recommended)

Mounting

- **Pole Mount** – This light comes equipped with a ¾" NPT flange for easy adapting to many standard configurations.
- **Bracket Mount** – This light comes equipped with a rotational mounting bracket intended for mounting to flat surfaces. Mounting hardware can be substituted but it is recommended that Stainless Steel hardware be used regardless of fastener type.
- **Surface Mount** – This light requires an area of 14" x 5 ½" for mounting. Make sure adequate space is available on the mounting surface before drilling holes. Drill a ½" through hole in the center of the mounting position for the power wires to pass. This light comes with 4 temporary plastic wing nuts on each of the 4 corner bolts. Remove the wing nuts and use the 4 remaining 10-24 machine screws with your choice of nuts or replace the 4 corner bolts with your choice of #10 tapping screws. (Stainless Steel hardware is recommended) Apply a small ring of Silicone RTV around the wire exit hole on the rear of the surface mount plate to ensure proper sealing. Make sure when the light is mounted that the logo is not upside down. This will ensure proper airflow for cooling.
- **Semi-Recess Mount –** This light requires an area of 17 ½" x 9 ½" for mounting and requires a hole 15 ¼" wide by 7 ¼" deep to be cut into the mounting surface. Make sure adequate space is available on the mounting surface before drilling holes. After the recess hole is cut, place and use the light assembly to mark the centers of each mounting screw position. Pre-drill holes appropriately sized for the mounting surface substrate to accommodate the #10 self-tapping screws. Apply a bead of Silicone RTV around the entire rear flange of the recess mount and

around mounting screw holes to ensure proper sealing. Connect the power wires, position, and use the 8 - #10 screws provided to securely mount the fixture in place. Make sure when the light is mounted that the logo is not upside down. This will ensure proper airflow for cooling.

Light Head Assembly & Surface Mount Mounting Hole Locations

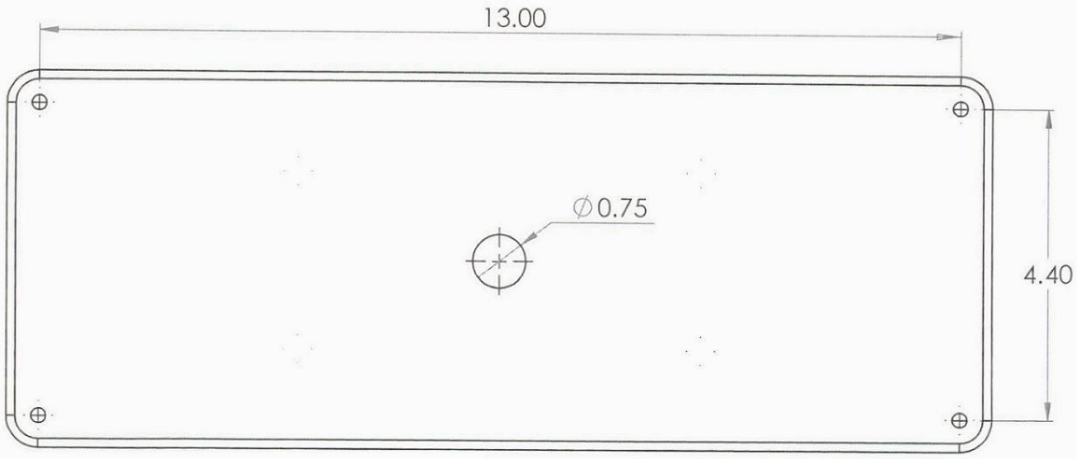

Semi-Recess Mount Mounting Hole Locations

