OPERATING MANUAL

MODELS: EPF-10P.3 SERIES

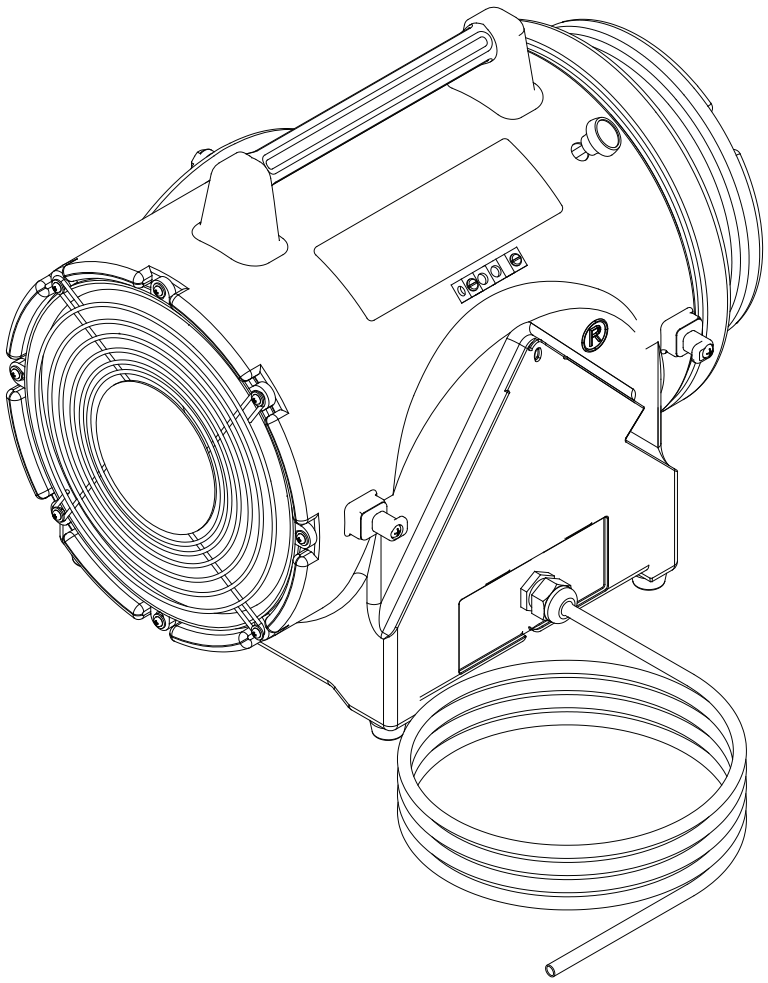

C US

LARSON ELECTRONICS, LLC.

9419 US-HWY 175, Kemp, Tx, 75143

Telephone (903) 498-3363

Toll Free (800) 369-6671

Fax No. (903) 498-3364

http://www.larsonelectronics.com

e-mail: sales@larsonelectronics.com

The Saddle Ventilation System

Typical Vent Setup Procedure

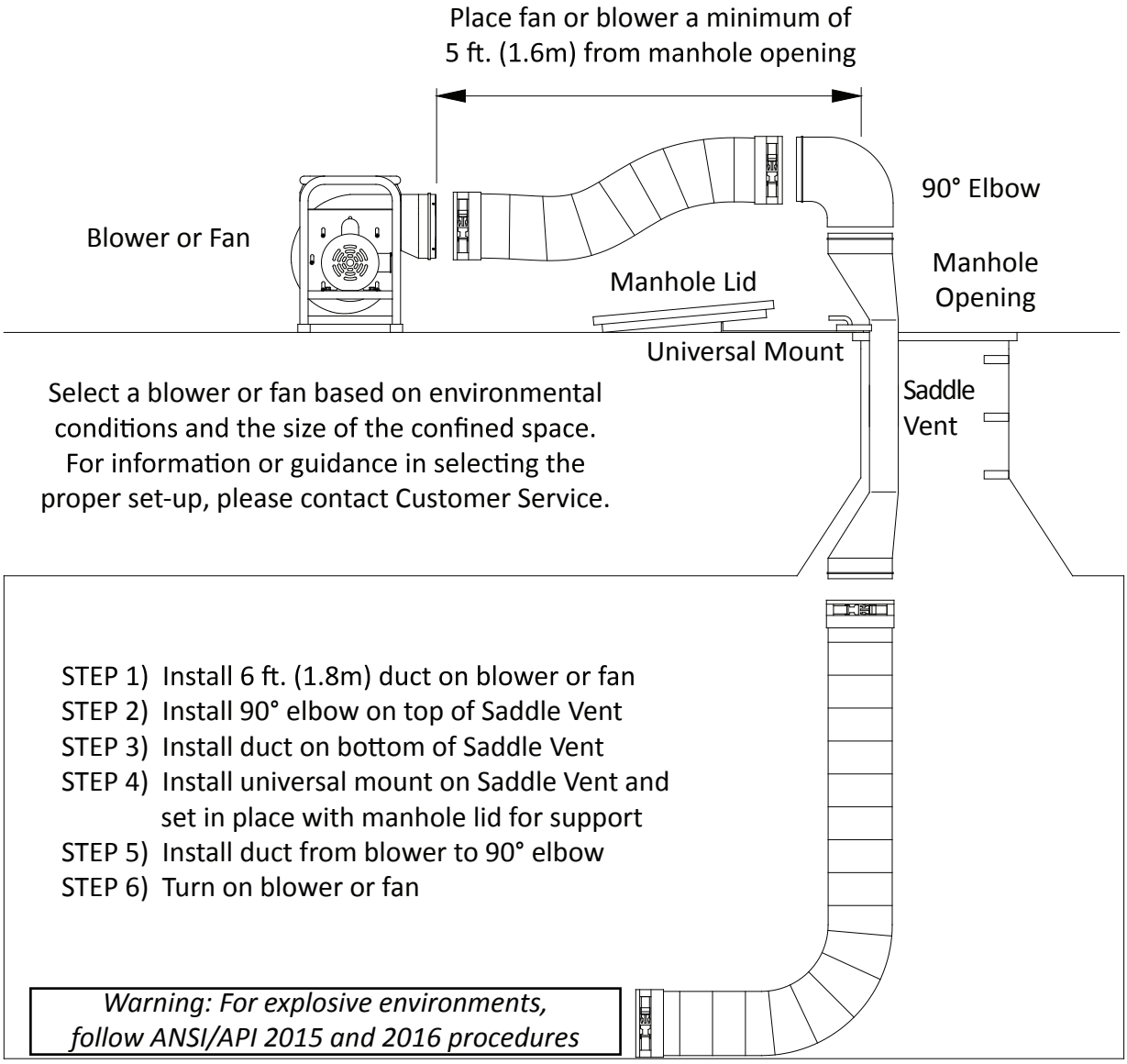

WARNING: HAZARDOUS LOCATION OPERATIONS

Use an explosion-proof or intrinsically safe blower or fan, conductive ducting, and the conductive Vent system. Attach all grounding wires and assure a complete circuit to the blower or fan in order to remove static charges.

SAFETY PRECAUTIONS

READ AND FOLLOW ALL INSTRUCTIONS BELOW

All ventilation procedures should comply with federal, state, and local regulations. Air quality should be tested prior to ventilating a confined space. A purge chart is provided in this manual help assist in estimating the approximate time needed to ventilate confined spaces. Air quality should be tested continuously during confined space occupancy to ensure a stable atmosphere and worker safety as atmospheric conditions can change rapidly. Additional procedures and recommendations are available from federal, state, and local agencies. **DO NOT** operate these fan units in a vertical position or with the flange or guards removed.

WARNING

Fan and blower models with the "EPF" designation are the only models approved for use in hazardous locations.

If volatile or explosive vapors are suspected, use explosion proof electirc blower, explosion proof contractors fan.

IMPORTANT

-Approved for outdoor use.
-Thermally protected.
-Attachment plug shall be a certified and/or listed for both Canada and the U.S., type suitable for the area of classification that it is used in.
-**Caution!** To reduce the risk of electric shock, connect only to an outlet provided with a ground fault interrupting device.
-**Warning!** Explosion hazard. Do not connect or disconnect while circuit is live unless area is known to be non-hazardous.

SPECIFICATIONS

Motor Type	220 VAC, 50/60 Hz, 1/4 HP Class 1 & 2, Group C,D,E,F,G
Outlet Size	8" Diameter (203 mm)
Flow Rates	Free Air: 974 CFM 25 ft. of Duct with one 90° bend: 786 CFM

SETUP AND OPERATION

STEP 1)
Place fan in a clean fresh air environment. **Note: Inspect fan for damaged or worn parts. Inspect all ducting and couplings for possible air leaks prior to fan operation.**

Note: Air quality of the confined space should be tested prior to ventilation. If air quality of the confined space is unacceptable, consult a trained professional.

STEP 2)
Install duct cuff to exhaust flange and tighten cinch strap. Keep bends and kinks in ducting to a minimum to maximize air flow.

NOTE: The use of conductive ducting is recommended when opearting in potentially explosive environments. Assue that the fan is properly grounded before operating and the ground wire in the conductive ducting is attached to the fan and Saddle Vent, if used.

CAUTION:

If explosive or volatile vapors are suspected or present, follow ANSI/ API procedure 2015 and 2016 for proper grounding of the fan. All static electricity must be removed from the fan and attached ducting prior to energizing the fan. Conductive ducting should be tested semi-annually to assure resistance (ohms) does not exceed 300k. If sufficient resistance is not achieved, the duct should be removed from service.

STEP 3)
Explosion-proof models should be fitted with an approved explosion-proof plug to meet hazardous locations specifications. The plug should not be disconnected or connected in an explosive environment when the fan is energized.

STEP 4)
The “ON/OFF” switch is integrated in the motor. Pull the “ON/OFF” switch knob outward to turn the fan “ON”. The unit is now operational. To turn the fan “OFF,” push the switch knob in toward the fan housing.

TROUBLESHOOTING

PROBLEM	POSSIBLE CAUSE	SOLUTION
Excessive vibration	Air intake blocked	Turn fan off and clear debris from intake.
	Possible internal damage	Turn off and inspect fan blades, shaft, and housing for debris, damage, and loose screws. Note: Never run fan for extended periods without installing duct on the exhaust flange.
	Possible external damage	Turn fan off and inspect for loose guards, broken welds, etc.
Circuit breaker trips	Voltage output insufficient	Test outlet with volt meter.

PARTS

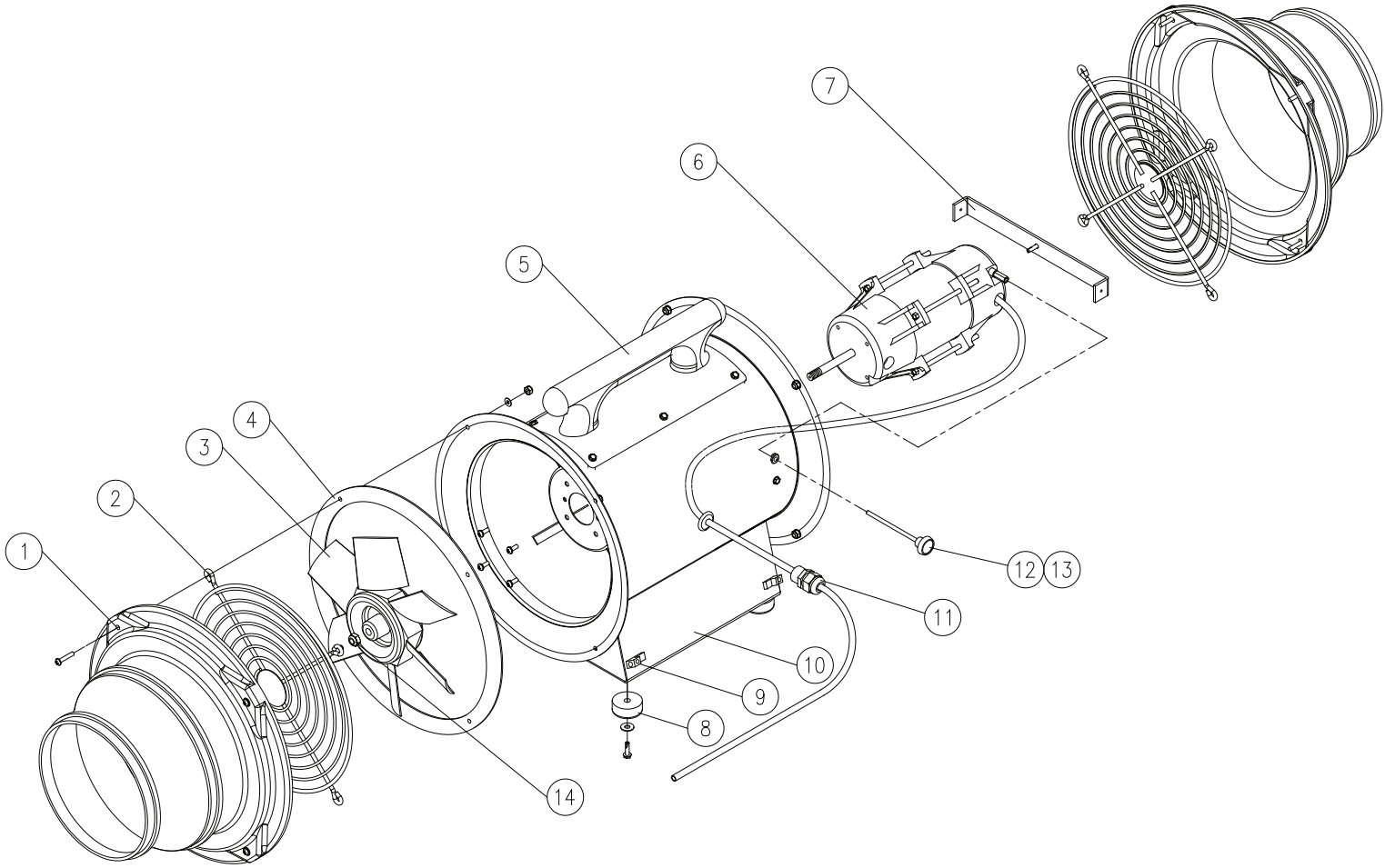

ITEM #	DESCRIPTION
1	8” to 10” DUCT TRANSITION
2	INTAKE/DISCHARGE GUARD
3	FAN BLADE ASSEMBLY
4	INLET/OUTLET FLANGE GASKET
5	HANDLE
6	EXPLOSION PROOF MOTOR WITH 25 FT. SJOOW CORD (NO PLUG)
7	MOTOR SUPPORT BRACKET
8	RUBBER FOOT
9	GROUND LUG
10	RED POWDER-COATED STEEL HOUSING
11	STRAIN RELIEF
12	10-24 X 3-1/2” LONG THREADED STUD
13	ON/OFF SWITCH KNOB
14	FAN BLADE LOCK NUT