1000 Watt High Pressure Sodium Light
Operation Manual

WARNING
To avoid the risk of fire, explosion or electric shock, this product should be installed, inspected and maintained by a qualified electrician only, in accordance with all applicable electrical codes.

To avoid electric shock:
- Be certain electrical power is OFF before and during installation and maintenance.
- Luminaire must be connected to a wiring system with an equipment-grounding conductor.
- Make sure the supply voltage is within the luminaires' voltage rating.

This luminaire is designed for outdoor lighting service, and should not be used in areas of limited ventilation, or in high ambient temperature enclosures. Best results if installed and maintained according to the following recommendations.

INSTALLATION
CAUTION: Unit will fall if not installed properly. Follow installation instructions.

The floodlight is provided with a trunnion bracket which can be mounted directly on flat surfaces or building fronts. The trunnion bracket has a clearance hole for a ¾ inch bolt used for attachment for such mountings. The ½ inch holes on either side permit additional anchoring, where required. Tighten side trunnion bolts to 18-22 foot pounds.

AIMING
Slightly loosen bolts (two on trunnion) tilt luminaire to desired position and retighten bolts.

LAMPS
Use only lamps specified on nameplate. Observe lamp manufacturer's recommendations and restrictions on lamp operation, particularly ballast type, burning position, etc.

Lamp tightness- The lamp should be securely inserted to the NEMA-EEI specified torque of 35 inch pounds, which is best achieved by very firmly tightening to insure application of sufficient torque. Tightening must be sufficient to fully depress and load the center contact of the socket.

WIRING
Make all electrical connections in accordance with the National Electrical Code and any applicable local code requirements.

Verify that the supply voltage is correct by comparing it to the nameplate. Unit is designated as multi-volt or multi-watt. Follow specific instruction on page 2.

Three conductor No. 14 cable (with 90°C minimum insulation) is recommended for making electrical connections to the HALPRM-1000WHPS-347.480V.

Wiring is accomplished through the wiring box provided on the fixture. The box is provided with a size ¾ inch NPT threaded conduit opening. Wiring methods must comply with NFPA 70 (The National Electrical Code) Article 501 for Class 1, Division 2 Hazardous (Classified) Locations.

To get inside the unit, open the door, loosen the (2) screws holding the reflector and remove the reflector. Verify the correct supply voltage and lamp wattage on fixture nameplate.

MULTIVOLT (120/277/347/480V)

Connect the ballast lead with the insulated terminal to the desired voltage terminal as indicated on the ballast terminal nameplate. See wire diagram below (FIGURE 1).

WIRING OUTDOOR SALT WATER MARINE

Wiring is accomplished through the wiring box on the bottom of the fixture. When wiring is complete, tighten weatherproof fitting on box around cable.

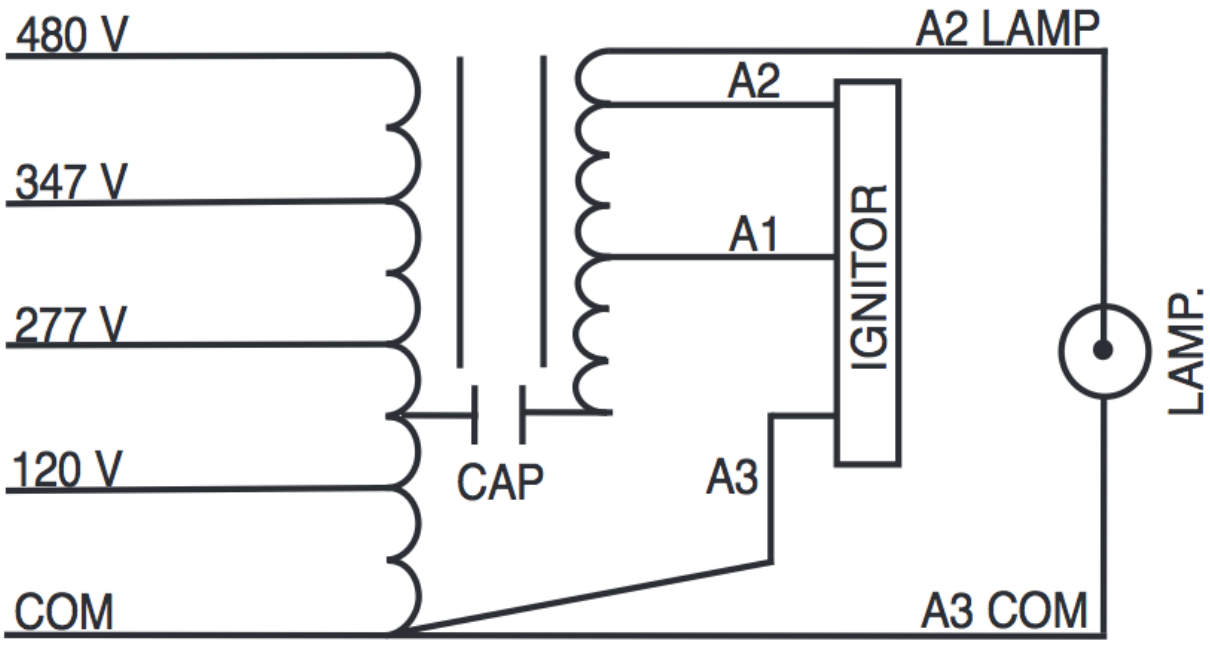

FIGURE 1

MAINTENANCE

CAUTION: Risk of Burn. Disconnect power to the light and allow the unit to cool down before performing maintenance.

The ALGLAS finish on the reflector and the door glass may be cleaned with any suitable nonabrasive glass cleaning solution, soap, or detergent and rinsed with clean water.

Perform visual, mechanical and electrical inspections on a regular basis. We recommend routine checks to be made on a yearly basis. Frequency of use and environment should determine this. It is recommended to follow an Electrical Preventive Maintenance Program as described in NFPA 70B: Recommended practice for Electrical Equipment.

WARRANTY

Should further information not covered by these instructions be required, please contact Larson Electronics at 1-800-369-6671 or sales@larsonelectronics.com for further assistance.

Please visit LarsonElectronics.com for **Warranty** and **Return** information.