Rooflight & Bracket Installation Instructions

Larson Electronics' roofilghts are designed to give years of reliable performance. Please level your vehicle, disconnect battery, and familiarize yourself with all instructions before proceeding step by step. Protect your eyes with safety glasses. Proper care during Installation and occasional maintenance will ensure years of beauty and service.

Tools Required

Scissors	Drill, 1/8", 3/16", 5/16", & 1/2" Drill Bits	Screwdrivers	3/8" Box Wrench	Pliers
Masking Tape	Hammer, Center Punch, & Flash Light	Allen Wrenches	Torque Wrench	Body Sealer

Installation of Bracket

1. Select a desired location for installation of rooflight. ***Note: When selecting the location, make sure that care is taken to eliminate any possible impact between rooflight handle and any occupant.***
2. Cut out Template (Fig. 2 & Fig. 3) and tape it down with Masking Tape. Lay Bracket over Template to be sure Bracket lies flat.
3. Center punch four bracket screw holes and remove Template.
4. ***Metal Roofs:*** Drill three 1/8" holes through outer skin of roof only. Drill one 3/16" hole through Outer Roof and Head Liner. Mount Bracket and Molded Gasket using three Self-Tapping Screws and one Machine Screw, Lockwasher, and Nut.

   Non-Metal Roofs: Drill four 3/16" holes through Outer Roof and Head Liner. Mount Bracket and Molded Gasket using four Machine Screws, Lockwashers, and Nuts.
5. Insert Drill Bushing into Bracket and tighten Set Screw A (Fig. 1).
6. Keep drill vertical and in proper alignment with Drill Bushing to drill 1/2" rooflight shaft hole in three steps:
   A. Drill through outer skin of roof and stop drilling.
   B. Use Flashlight to check and make sure that all wires will clear the drill path.
   C. Then, continue drilling through Head Liner.
7. Remove and discard Drill Bushing with Pliers as it may be hot.
8. If the mounting area is not smooth or flat, it is recommended to remove the bracket and molded gasket and carefully fill the bottom voids with Body Sealer to provide a watertight seal around the bracket and holes. ***Note: If the mounting area is smooth and flat, the molded gasket will seal the bracket and holes.***
9. Reinstall Bracket after filling Body Sealer.

Installation of Rooflight

10. Remove Handle Assembly by removing Wedge Screw and Wedge (Fig. 4).
11. Check the distance between ends of Outer Tube and Intermediate Tube and ***make sure it is at least 1"*** to ensure electrical continuity between Rod Contact and Switch Contact.
    A. If it is at least 1", tighten Set Screw ***B*** to keep Outer Tube from moving out from Head Housing, but do not overtighten.

Fig. 1: Installation of Bracket

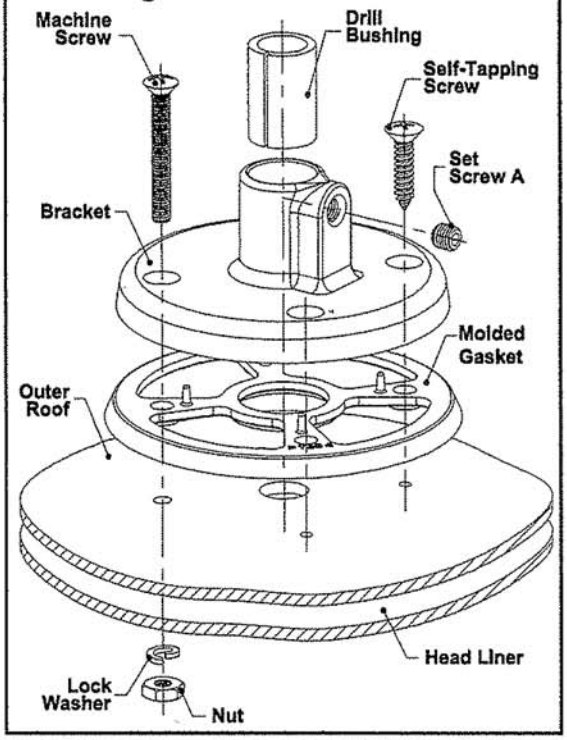

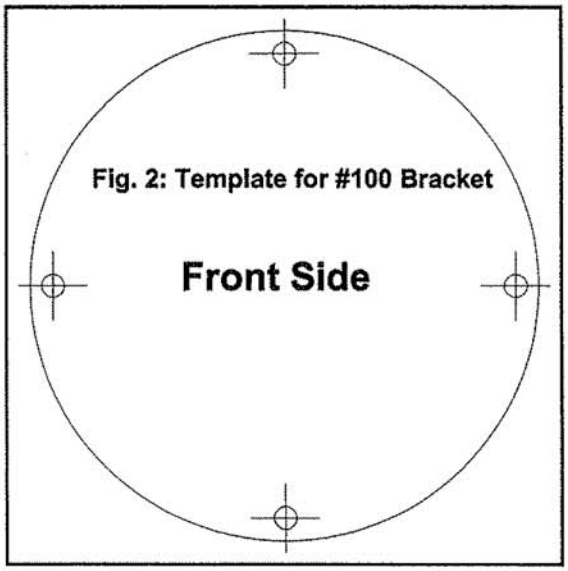

Fig. 2: Template for #100 Bracket

B. If it is less than 1", loosen Set Screw ***B***, seat Outer Tube into head housing completely, and then tighten Set Screw ***B***. Under any circumstances, if Nylon Bushing is pulled out of Head Housing (Fig. 5), ***align Key C on Nylon Bushing with the keyway inside Head Housing*** to seat it and O-Ring ***B*** back into Head Housing completely. Otherwise, Outer tube cannot be seated into Head Housing properly.

12. Slip O-Ring ***A*** over Outer Tube against Split Bushing.

13. Insert the rooflight shaft gently through Bracket without disturbing Rod Contact and Insulator at the end of Rod (Fig. 4) until Head Housing is flush against Bracket. Split Bushing will seat itself inside Bracket. ***Note: The split in Split Bushing must be placed 90° from Set Screw A for maximum clamping force.***

14. Tighten Set Screw ***A*** slightly to create just adequate friction force to keep Split Bushing stationary and to allow the notch orientation of Outer Tube to be setup. Do not over-tighten Set Screw ***A***. Over-tightening will make it difficult to set up the notch orientation in the following.

15. **Set up Notch Orientation of Outer Tube**

    A. Gently slide Handle Assembly onto the rooflight shaft, at the same time turn Handle Grip about its axis to engage Key ***B*** of Gear with Rod Slot, and rotate the whole handle assembly about Shaft Axis to engage Key ***A*** of Handle Housing with Outer Tube Notch.

    B. Rotate Outer Tube to set up Notch Orientation by using Key ***A*** of Handle Housing to push against the notch side(s) until Handle Grip swings within your desired 180° arc.

    C. Remove the handle assembly, and tighten Set Screw ***A*** to a torque of 60-70 in-lbs to ***keep Outer Tube Notch at the desired orientation during and after installation.***

16. Loosen Set Screw ***B*** slightly and rotate the rooflight about Shaft Axis to set Rooflight Head in the middle of its 180° swing arc as desired.

Fig. 3: Template for #100 Bracket

Back Side

Note: Cut out this template and use it for installation of #100 bracket

Fig. 4 Installation of Rooflight

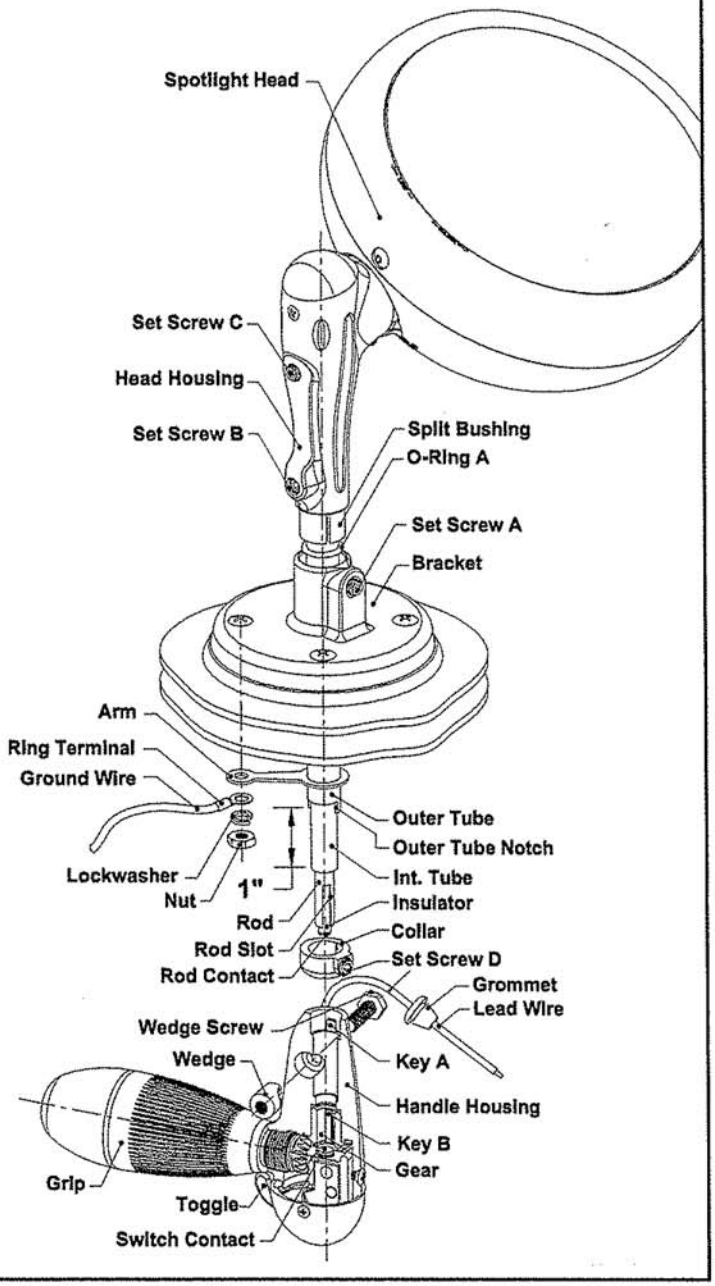

Fig. 5: Exploded View of Head Housing Assembly

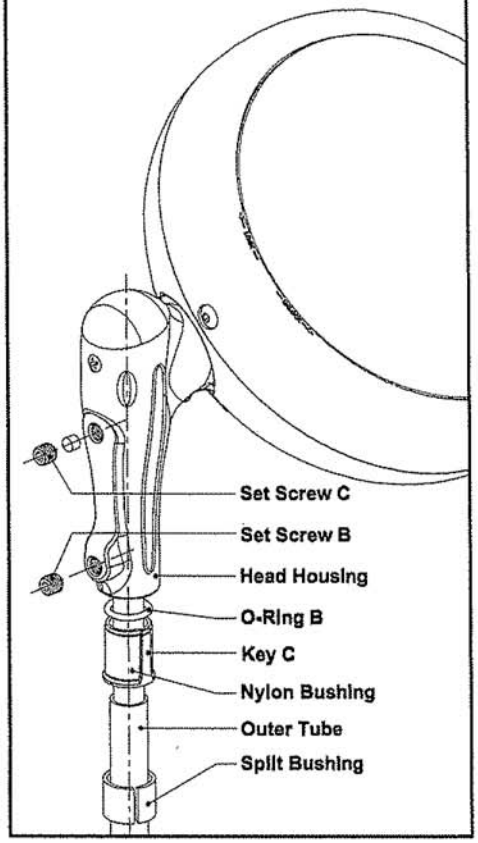

Fig. 6: Tension Adjustments:
Set Screw B for Horizontal Swing
Set Screw C for 360° Rotation

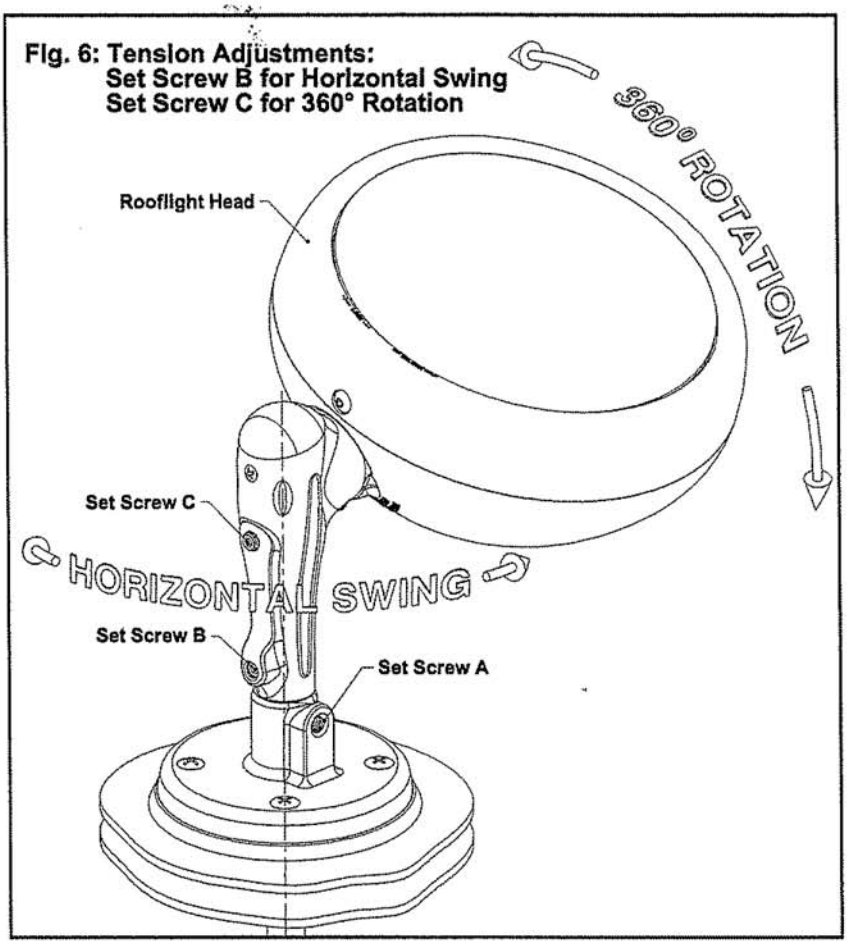

17. Slip Arm and Collar onto Outer Tube with the smaller hole in Arm mating with a machine screw from the outer bracket. Tighten Set Screw ***D*** inside Collar and attach Lockwasher and Nut to the machine screw.

18. ***Recheck the 1" dimension*** to be sure that Outer Tube is not moved out of Head Housing during the installation process.

19. Install Handle Assembly (Step 15.A). Bring Handle Grip to the middle position of its 180° swing arc that is setup through setting up the notch orientation of Outer Tube at Step 15. ***Keep applying pressure against Handle Assembly to assure continuity between Switch Contact and Rod Contact*** until Wedge and Wedge Screw are inserted into Handle Housing, and Wedge Screw is tightened to a torque of 60-70 in-lbs.

20. Make sure that Rooflight Head always has proper clearance from any equipment installed on the vehicle roof, and that Handle Grip always has proper clearance from the vehicle interior. If Rooflight Head does not have proper clearance, readjust the middle position of its 180° swing arc that has been setup at Step 16. If Handle Grip does not have proper clearance, readjust Notch Orientation of Outer Tube that has been setup at Step 15.

21. Make proper adjustments (Fig. 6) to Set Screw ***B*** which controls the tension for horizontal swing of Rooflight Head, and to Set Screw ***C*** which controls the tension for 360° rotation of Roof Head, so that they create just enough tension to hold the position of Rooflight Head in wind. Over-tightening may cause difficulties to aim rooflight as well as premature wear-and-tear of Rooflight components.

22. Drill a 5/16" hole in the head liner near Arm for Grommet. Lead Wire may be routed through and behind the windshield trim and then attached to a fused power supply such as Fuse Panel or Ignition Switch as desired. ***Non-Metal Roof Only:*** attach Ring Terminal to Ground Wire and fasten to one of the machine screws. Connect the other end of Ground Wire to appropriate ground.

23. Finally, connect battery and test rooflight. Turn rooflight on-off through using Toggle Switch (Fig. 4), and swing it horizontally by turning the handle assembly about Shaft Axis, and rotate it 360° around in both directions by turning the handle grip about its own axis.

Fig. 7: Bulb Replacement

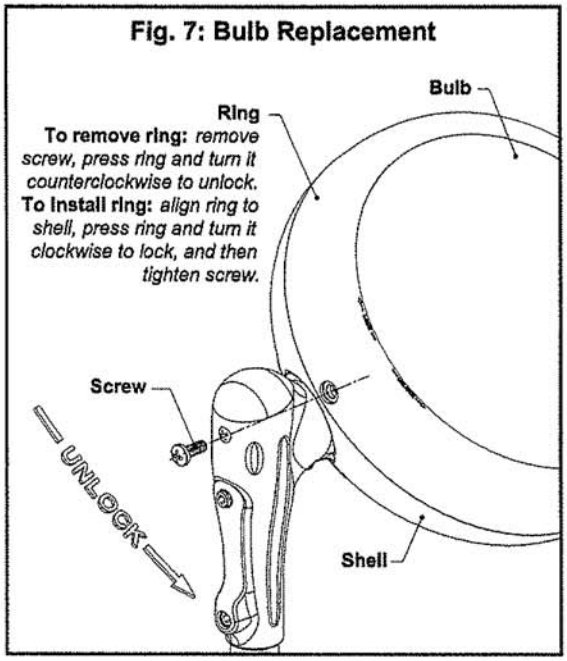

TROUBLE-SHOOTING TIPS

24. **Electrical Trouble-Shooting:** if a rooflight does not light, first read steps 10-23 to understand the rooflight installation process, and then follow the below procedures.
    A. Assure continuity between Switch Contact and Rod Contact by loosening Wedge Screw, pushing Handle Assembly upward, and re-tightening Wedge Screw to a torque of 60-70 in-lbs.
    B. If light still does not work, check fuse. If fuse failed, replace fuse. If the fuse is good or if light still does not work, go to the next step.
    C. Disconnect Lead Wire from power source first, and then remove Handle Assembly. ***Always keep Lead Wire disconnected from Power during the removal and installation process of Handle Assembly.*** Test light by applying 12 VDC power to Rod Contact.

    If light works:

    a). Check the 1" dimension of exposed Intermediate Tube (Fig. 4). If at least 1", replace the handle assembly with new one, and then install the new handle assembly. If less than 1", go to the next step.

    b). Reposition Outer Tube. Loosen Set Screw ***A*** and Set Screw ***B***. Remove Rooflight Assembly and Outer Tube. Seat Outer Tube into Head Housing (Step 11.B). Then, reinstall Rooflight Assembly and Handle Assembly. Test your rooflight. If it still fails to light, replace the handle assembly with new one.

    If light does not work:

    c). Check Bulb. Open Rooflight Head (Fig. 7), disconnect bulb wires, and use a 12 VDC power source to check out Bulb. If it lights, replace the rooflight shaft assembly with new one. If it does not, go to the next step.

    d). Replace bulb and test light by applying 12 VDC power to Rod Contact. If light still does not work, replace the rooflight shaft assembly with new one. If light works, check the 1" dimension of exposed Intermediate Tube. If less than 1", go to Step b) above. If at least 1", reinstall the handle assembly and test light. If light still does not work, replace the handle assembly with new one.

25. **Mechanical Trouble-Shooting**
    A. If it is hard to turn Handle Grip to rotate Rooflight Head 360° in each direction smoothly:

    a). Adjust Set Screw ***C*** (Fig. 6) and make sure it is not over-tightened. After proper adjustment, if it is still hard to turn, go to Step b) below.

    b). Disconnect Lead Wire from power source. Remove Handle Assembly and rotate Handle Grip 360° about its axis in each direction. If the rotation is not smooth, replace the handle assembly with new one. If it is, replace the rooflight shaft assembly with new one.

    B. If it is hard to move Handle Assembly to swing rooflight Head about the shaft axis smoothly:

    a). Make proper adjustment to Set Screw ***B*** (Fig. 6). If rotation is still not smooth, go to Step b) below.

    b). Disconnect Lead Wire from power source. Remove Handle Assembly, loosen Set Screw ***B***, pull out the rooflight without removing Outer Tube from Bracket, clean dirt from Intermediate Tube by using Penetrating Oil, apply White Lithium Grease evenly on Intermediate Tube, and then install the rooflight (see Step 11).

    C. If Rooflight has interference with vehicle, disconnect Lead Wire from power, remove Handle Assembly, and check if Key ***A*** of Handle Housing (Fig. 4) is sheared. If it is, replace the handle assembly with new one. If it is not, re-set Notch Orientation of Outer Tube (Step 15) and the middle position of the 180° swing arc for Rooflight Head (Step 16), and reinstall Handle Assembly (Step 19).

MAINTENANCE

26. An occasional coat of automotive wax on exposed parts of rooflight will keep it looking new.