VFD Series

Variable Frequency Drive and Phase Converter

Instruction Manual

Installation • Operation • Parameter Reference • Maintenance

Thank you for purchasing a Larson Electronics VFD. Read this manual before installing, commissioning, operating or servicing the unit. Retain it for future reference and make it available to all qualified personnel who work with the equipment.

> **DANGER - ELECTRIC SHOCK AND STORED ENERGY**
>
> Disconnect and isolate all power sources before wiring or service. Wait at least 10 minutes after power is removed. A qualified person must verify that the DC bus has discharged below 36 V and that hazardous voltage is absent before touching internal parts. A dark display does not establish a safe condition.

> **CHECK THE PRODUCT LABEL**
>
> Use the label on the actual unit for input voltage, phase, frequency, amperage and output ratings. Confirm motor ratings and follow the wiring diagram supplied with the unit. Do not select wiring, protection or settings from another model's ratings.

Installation, operation and maintenance must be performed by qualified personnel in accordance with applicable electrical and building codes.

Using this manual

This manual covers the Larson Electronics VFD Series. It describes the controls, parameter groups, wiring examples, protective functions and maintenance procedures used across the product line. Available terminals, accessories, functions and parameter ranges depend on the unit and its firmware.

Product ratings and applicability

- The product label is the primary reference for input and output electrical ratings. Use the supplied dimensional and wiring drawings for mounting, terminal identification and connections.
- Parameter adjustment ranges are programming limits, not permission to exceed the drive, motor or driven equipment ratings. A displayed limit may differ between units. Use the lower applicable equipment limit.
- A single-phase-input drive with a three-phase output normally operates a compatible three-phase motor. The single-phase motor examples in Section 3.3 apply only where Larson Electronics has confirmed compatibility of the exact drive and motor.
- Figures illustrate typical arrangements. Covers may be shown removed for clarity. Reinstall all covers and guards before energizing the drive.
- If the product label, supplied drawings, terminal markings or available parameters do not match the planned installation, stop and contact Larson Electronics before energizing the equipment.

Before first operation

Check	Required action
Electrical supply	Confirm voltage, phase, frequency, input current, branch protection and grounding against the unit label and supplied instructions.
Motor and load	Verify the motor nameplate, mechanical speed limits, cooling, direction of rotation and protection settings.
Command sources	Identify keypad, terminal and serial commands. Keep personnel clear of equipment that may start automatically.
Records	Record configured parameters and retain the unit model and serial number for future service.

Contents

Entries identify sections. PDF bookmarks provide direct navigation.

1 Safety Precautions

1.1 Safety considerations

1.2 Application considerations

1.3 Disposal

2 Product Description

2.1 Product identification

2.2 Product label

2.3 Electrical ratings and selection

2.4 Technical features

2.5 Product structure

2.6 Dimensions and mounting

2.7 Optional accessories and braking

3 Installation and Wiring

3.1 Mechanical installation

3.2 Standard wiring

3.3 Single-phase motor applications

3.4 EMC installation

4 Operation, Display and Applications

4.1 Initial power-on

4.2 Running the VFD

4.3 Keypad

4.4 Display states

4.5 Keypad operation

5 Function Parameter Table

5.1 Parameter symbols and applicability

5.2 Function code table

Contents

Entries identify sections. PDF bookmarks provide direct navigation.

6 Function Code Descriptions

6.1 P0 - Basic running parameters

6.2 P1 - Frequency settings

6.3 P2 - Start and brake settings

6.4 P3 - Auxiliary running parameters

6.5 P4 - Terminal controls

6.6 P5 - Protection parameters

6.7 P6 - Fault records

6.8 P7 - Closed-loop / PID controls

6.9 P8 - PLC operation

6.10 P9 - Swing frequency and auxiliary functions

6.11 PA - Vector control and motor parameters

6.12 PF - Factory functions

7 Troubleshooting

7.1 Fault alarms and troubleshooting

7.2 Fault records

7.3 Fault reset

8 Preservation and Maintenance

8.1 Routine inspection

8.2 Periodic maintenance and replacement

9 RS485 Serial Communications

9.1 Communication overview

9.2 Network and protocol settings

9.3 ASCII / RTU frames, checksums and commands

A Installation and Service Record

1 Safety precautions

1.1 Safety considerations

Read these instructions before installing, commissioning or servicing the drive. The safety instructions apply to the VFD, motor and connected equipment.

Signal word	Meaning
DANGER	An electrical or mechanical hazard that can cause fire, serious injury or death if the instructions are not followed.
CAUTION	A condition that can cause injury or equipment damage if the instructions are not followed.

Receiving, handling and installation

- Do not install a wet, damaged or incomplete unit. Verify that the package identification agrees with the product label. Handle the unit carefully and use suitable lifting methods.
- Do not touch control-board components with bare hands. Use appropriate electrostatic-discharge precautions.
- Mount on metal or another noncombustible surface. Keep the unit away from explosive or combustible gases, direct sunlight, dust, moisture and excessive vibration.
- Do not loosen factory-marked fasteners or alter the internal assembly. Keep wire clippings, screws and other foreign material out of the drive.
- Provide the ventilation clearances shown in Section 3.1. When several drives share an enclosure, prevent hot exhaust air from one drive from entering another.

> **QUALIFIED PERSONNEL**
>
> Only qualified personnel may install, wire, test or service this equipment. Follow the applicable electrical codes and the product-specific instructions.

1.1 Electrical and operating safety

Before wiring or maintenance

- Disconnect, isolate and lock out all power sources. Wait at least 10 minutes. Before touching internal parts, verify DC bus voltage below 36 V and absence of hazardous voltage with an appropriately rated meter.
- Connect the drive and motor to a protective equipment-grounding conductor. Leakage current may exceed 3.5 mA. Size grounding conductors and branch protection for the actual installation and applicable codes.
- Never connect incoming AC power to U, V or W. Verify input terminals against the unit label and wiring diagram; terminal designations vary.
- Install a suitable input circuit breaker or other specified branch protection. Do not repeat the factory dielectric-withstand test on the drive. Disconnect the drive from motor insulation testing.
- Connect braking components only as shown in the unit-specific braking diagram. A resistor connects to P+ and PB only where a compatible internal brake chopper is fitted. Never connect a braking resistor directly across P+ and P-.

Before and during operation

- Check supply voltage, input/output connections, grounding and tightness. Fit all covers and guards before energizing. Do not open the cover or touch terminals while energized.
- Keep personnel clear during motor tuning, restarting and automatic operation. Change settings only after understanding their effect on the motor and load.
- Do not touch the cooling fan, heatsink or braking resistor during operation or before cooling. Do not insert foreign objects or use a line contactor for routine start/stop control.
- Only qualified personnel may measure operating signals. Disconnect power before inserting or removing plug-in parts. Recheck all parameters after replacing the drive.

1.2 Application considerations

Motor insulation and thermal protection

Inspect motor insulation before first use, after storage and during periodic maintenance. Disconnect all motor leads from the VFD before insulation testing. For motors suitable for this test, the recommended test is a 500 V insulation-resistance test with a minimum result of 5 MΩ. Follow the motor manufacturer's limits when they differ.

Set motor current and protection parameters to the actual motor nameplate. Where the drive is larger than the motor, ensure the motor remains adequately protected; provide suitable external motor protection when required. For multiple motors, protect each motor individually.

Speed, resonance and motor cooling

Do not exceed the frequency, speed, voltage or current limits of the drive, motor or mechanical equipment. Higher-than-base-frequency operation requires confirmation that the motor and load are suitable. Avoid resonant speeds by using skip-frequency settings.

PWM output can increase motor heating, noise and vibration. A shaft-mounted cooling fan becomes less effective at reduced speed; use a motor suitable for variable-speed operation or separate cooling when needed.

Output-side devices and contactors

Do not connect power-factor correction capacitors or surge-suppressing varistors to the VFD output. Keep signal wiring away from power wiring and cross at right angles where necessary. For motor cables longer than 100 m, consult Larson Electronics about a suitable output reactor or other output treatment.

Use the drive run/stop commands for routine operation. If input contactor switching is unavoidable, allow at least one hour between switching cycles. Do not open or close a motor-side contactor while the drive is producing output.

Voltage and phase compatibility

Use only the voltage and input-phase arrangement marked on the unit. A three-phase-input drive must not be supplied from single-phase power unless specifically approved for that service. A transformer, when required, must be selected for the application. Single-phase input does not establish single-phase motor compatibility.

1.2 Application considerations (continued)

Surge exposure and special connections

Integral drive protection does not replace suitable supply-side surge protection where lightning exposure or switching transients require it. Contact Larson Electronics before using common-DC-bus arrangements or other wiring not covered by the unit's instructions.

Altitude and environment

Above 1,000 m elevation, reduced air density lowers cooling effectiveness. Derating is required. Obtain the allowable output current for the installation altitude from Larson Electronics before selecting or operating the drive. Also apply any required ambient-temperature derating.

Motor suitability and tuning

Use a motor type supported by the supplied drive. Standard applications use compatible AC induction motors. Permanent-magnet or other motor types require confirmation that the particular drive and firmware support them. Enter the actual motor nameplate data and perform the applicable tuning procedure before normal operation.

Check new or serviced motor cables and windings for short circuits and insulation defects with the VFD disconnected. Do not rely on factory-default parameters to protect every motor. Review settings after motor or drive replacement.

1.3 Disposal

Dispose of the drive and its components through appropriate industrial electrical/electronic waste facilities. Do not burn circuit boards, plastics or electrolytic capacitors. Burning may release toxic gases and capacitors may explode.

> **BEFORE RESTARTING**
>
> Determine and correct the cause of a fault before resetting the drive. Confirm that restarting cannot injure personnel or damage equipment. Automatic restart, remote commands and stored-energy conditions must be considered.

2 Product description

2.1 Product identification

Larson Electronics VFD Series drives provide adjustable motor speed using V/F control and, on supported configurations, sensorless vector control. Applications include compatible industrial machinery, fans and pumps. Keep the model and serial number from the unit label with the installation records.

2.2 Product label

Label information	Installer verification
Input voltage and phase	The available supply must match the drive's marked input requirements. Do not infer phase from the output configuration.
Input frequency and current	Use the marked frequency and current for supply and branch-circuit design, together with applicable codes and supplied instructions.
Output voltage, current and frequency	Confirm compatibility with the motor and allowable operating range. Do not exceed the unit's output current.
Power / duty rating	Confirm the motor load, overload duty and any derating requirements.
Model and serial number	Retain for commissioning, replacement parts and technical assistance.

2.3 Electrical ratings and selection

Refer to the actual product label for electrical ratings. Use the supplied drawings and application-specific instructions for conductor sizes, protective devices, terminal torque and accessory selection. If required information is absent or illegible, contact Larson Electronics before installation.

> **RATING LIMITS**
>
> The parameter tables describe available programming functions. Their ranges do not supersede the ratings printed on the unit or the motor nameplate.

2.4 Technical features

Features below describe the VFD control platform. Availability and usable ranges depend on the supplied configuration. Confirm settings on the actual unit.

Function	Description
Control	Optimized space-vector PWM; V/F control and supported sensorless vector control.
Frequency commands	Keypad potentiometer or keys, digital setting, terminal UP/DOWN, serial communications, analog voltage/current, pulse input and supported combined commands.
Command channels	Keypad, control terminals or serial port. Select the intended channel before operation.
Resolution / accuracy	Digital frequency setting: 0.01 Hz resolution. Typical digital accuracy: ±0.01% of maximum frequency. Analog accuracy: ±0.2% of maximum frequency; analog resolution: 0.1% of maximum frequency.
Torque and V/F curves	Automatic or manual torque boost; constant-torque, reduced-torque and user-defined V/F curves. See P0 parameters for settings.
Acceleration / deceleration	Linear or S-curve ramps; multiple selectable ramp times; seconds or minutes as configured. See P0, P3 and P8 groups.
Braking / jog	DC braking, jog operation and optional dynamic braking where the drive hardware supports it. See P2, P3 and Section 2.7.
Application controls	Built-in closed-loop PID, multistage speed, simple PLC sequence, swing frequency and supported water-supply functions.
Regulation / protection	Automatic voltage regulation, energy-saving control, current limiting and fault protection functions. Apply motor-specific protection settings.

2.4 Technical features (continued)

Function	Description
Control inputs	Programmable digital inputs; analog voltage and current inputs as identified on the supplied control board. Set jumpers for the selected signal type.
Control outputs	Programmable open-collector, relay, analog and pulse outputs where fitted. Confirm output ratings before connecting external loads.
Display / keypad	LED monitoring of frequency, voltage, current and other operating data; keypad locking and supported remote keypad operation.
Communications	RS485 with the protocol and register functions in Section 9. Optional networking accessories must be confirmed for the specific unit.
Environment	Indoor, clean and ventilated location; protect from direct sunlight, water, condensation, oil mist, steam, salt and corrosive or combustible gases.
Operating limits	Use the unit's marked environmental ratings. The general installation guidance in Section 3.1 uses -10°C to +40°C ambient and humidity below 90% without condensation.
Altitude / vibration	Derating above 1,000 m; vibration below 5.9 m/s² (0.6 g).
Storage	General storage temperature: -20°C to +60°C, dry and protected from contamination. Observe any different limits supplied with the unit.
Cooling / mounting	Fan-assisted cooling; mounting arrangement and enclosure protection depend on the supplied unit. Keep all ventilation paths clear.

Overload capability, maximum frequency, enclosure rating and any special environmental capability must be confirmed from the supplied unit's ratings. Do not assume that a feature offered on another VFD Series model is present.

2.5 Product structure

Typical construction includes the keypad, protective housing and terminal cover, mounting points and cooling-air passages. The illustration is representative; use the actual unit and supplied drawing for installation.

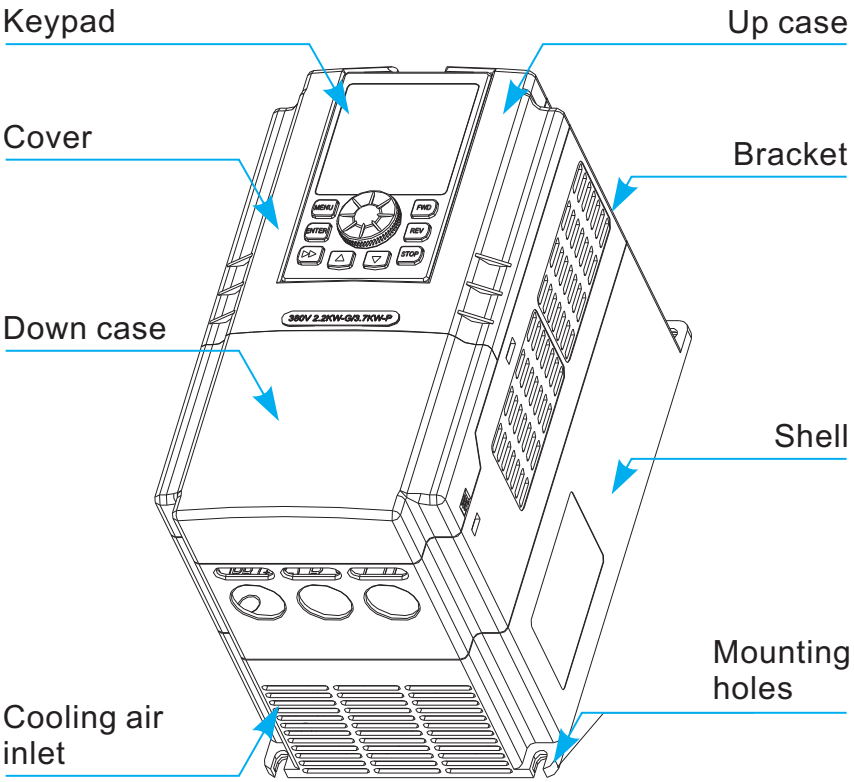

Figure 2-3. Typical VFD structure.

2.6 Dimensions and mounting

Use the dimensional drawing supplied for the actual unit. Verify mounting-hole spacing, enclosure size, weight, required fasteners and service access before drilling or lifting. Do not derive dimensions from an illustration or a different model. Provide the cooling clearances in Section 3.1 unless the unit-specific drawing requires more clearance.

2.7 Optional accessories

2.7.1 Remote control panel

A compatible remote panel can issue run, stop, jog and reset commands, change supported settings and monitor drive data. Local and remote panels may remain active simultaneously. Secure both command sources before service. Confirm compatibility, connection method and permitted cable length with Larson Electronics.

2.7.2 Communication cable

Use the approved cable and pinout for the remote keypad or communication interface. Route the cable away from motor and incoming power conductors. Do not assume that an RJ45-style connector is an Ethernet port.

2.7.3 Fieldbus accessories

RS485 control supports operating commands, frequency settings, monitoring and fault reset. See Section 9. Obtain unit-specific instructions for any optional fieldbus adapter or external control accessory.

2.7.4 Braking resistors and units

Braking hardware depends on the drive configuration. Confirm whether an internal brake chopper is installed. Select resistance, power and duty cycle for the actual drive, load inertia and stopping duty; obtain the required values from Larson Electronics. Do not choose a resistor from another model's ratings.

> **DANGER - BRAKING CONNECTIONS**
>
> Where a compatible internal brake chopper is fitted, connect the approved braking resistor only to the designated P+ and PB terminals. An external braking unit may connect to P+ and P- according to its own wiring instructions. Never connect a resistor directly across P+ and P-.

Mount braking components on a suitable noncombustible surface with the specified cooling and clearance. Resistors become hot during operation. Follow the accessory instructions for thermal protection and wiring.

3.1 Mechanical Installation

3.1.1 Installation Environment

- Please mount inside a well-ventilated location. The ambient temperature is required to be within the range of -10~40℃. If the temperature is higher than 40 ℃, the inverter should be de-rated, at the same time the ventilation and heat dissipation should be enhanced.
- Be away from the location full of dust or metal powder, and mount in the location free of direct sunlight.
- Mount in the location free of corrosive gas or combustible gas.
- Humidity should be lower than 90% with no dew condensation.
- Mount in the location where vibration is less than 5.9m/s2 (0.6G) .
- Please try to keep the inverter away from EMI source and other electronic devices which are sensitive to EMI.

3.1.2 Mounting Space and Direction

- Generally in vertical way.
- For the requirements on mounting space and distance, refer to Fig.3-1.
- When several inverters are installed in one cabinet, they should be mounted in parallel with special incoming and out coming ventilation and special fans. When two inverters are mounted up and down, an air flow diverting plate should be fixed as shown in Fig.3-2 to ensure good heat dissipation.

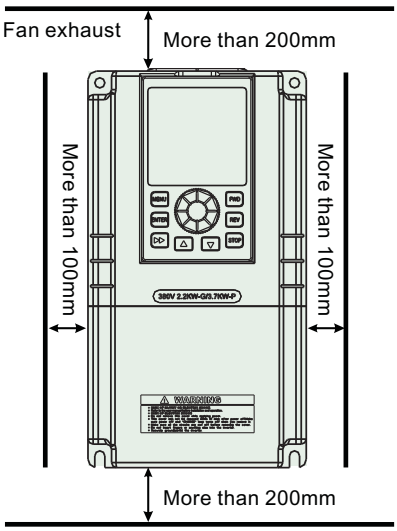

Figure 3-1 Mounting space and distance

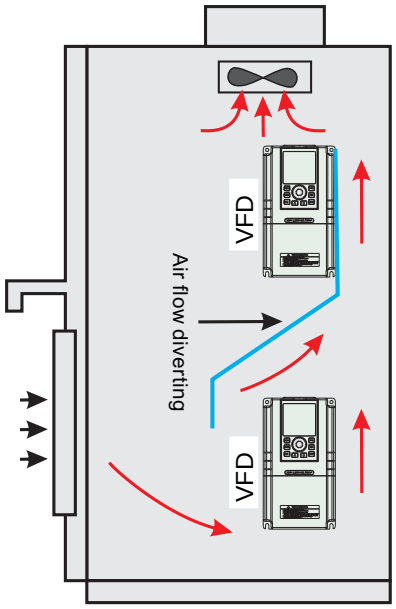

Figure 3-2 Mounting of multiple inverters

3.2 Standard wiring

3.2.1 Wiring precautions

> **DANGER - ISOLATE ALL SOURCES**
>
> Disconnect and lock out all power. Wait at least 10 minutes, then verify DC bus voltage below 36 V and absence of hazardous voltage before touching wiring. Only qualified personnel may perform this work.

- Verify the supply voltage, frequency and phase against the product label. Use the actual terminal markings and supplied wiring diagram. Never connect AC input power to U, V or W.
- Provide correctly sized branch protection, conductors and protective equipment grounding in accordance with applicable codes and unit-specific instructions. Ground both the drive and motor.
- Do not perform dielectric-withstand testing on the drive. Disconnect the drive before motor or cable insulation testing. Do not fit power-factor capacitors or surge-absorbing devices across the drive output.
- Keep analog, digital and communications wiring separate from incoming supply and motor cables. Use shielded or twisted signal cable as specified and make shield connections according to the supplied control drawing.
- General control-wiring guidance calls for conductors of at least 0.75 mm^2 and runs shorter than 50 m; the supplied control-terminal instructions may require larger conductors. Use only wire sizes accepted by the terminal and tighten to its specified torque.
- Check all connections and jumper settings before power-on. Make sure external command inputs cannot cause unexpected operation. Replace terminal covers and guards before energizing.

3.2.2 Main circuit wiring

The terminal names below describe functions across the VFD Series. Only use terminals actually fitted and identified on the supplied drive. Refer to the unit label for input and output voltage, phase and amperage.

Typical marking	Function / connection
L / N, L1 / L2, or designated R / S	Single-phase input only on units labeled for that supply and only at the specified terminals. A terminal marked N does not, by itself, establish that the site conductor is a grounded neutral.
R / S / T	Three-phase input where specified on the product label. Do not omit a phase unless the exact unit is approved for single-phase input.
U / V / W	Controlled motor output. Never connect incoming supply here. Verify motor compatibility before connecting.
PE / E / ground symbol	Protective equipment-grounding connection. Bond drive and motor according to the installation requirements.
P+ / (+), PB	Approved braking resistor connection only where a compatible internal brake chopper is fitted.
P+ / (+), P- / (-)	DC bus terminals. An approved external braking unit may connect here according to its instructions. Do not connect a resistor directly across these terminals.

Table 3-1. Main circuit terminal functions.

The basic wiring diagram in Section 3.2.3 shows a typical three-phase input arrangement. Single-phase-input units use the connections specified on their own wiring diagram. Terminal order, options and control-board layout may vary.

3.2.3 Basic Wiring Diagram

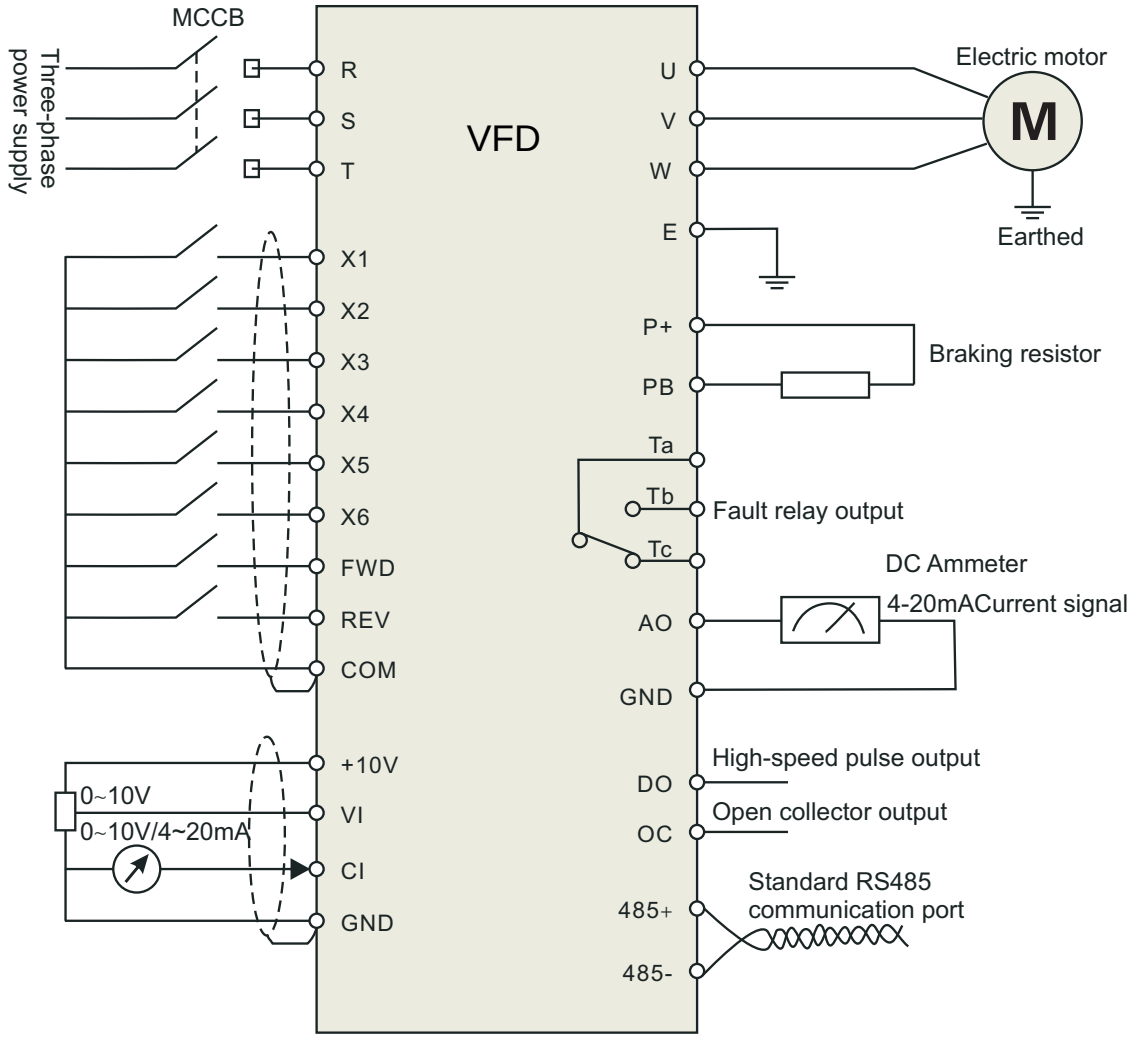

Figure 3-4 Basic Wiring Diagram

3.2.4 Control Circuit Terminal Wiring

3.2.4.1 Position and Function of Terminals and Jumpers on Control Circuit

Match the terminal markings and jumper positions on the supplied drive. Use the unit-specific wiring instructions for conductor size and terminal torque.

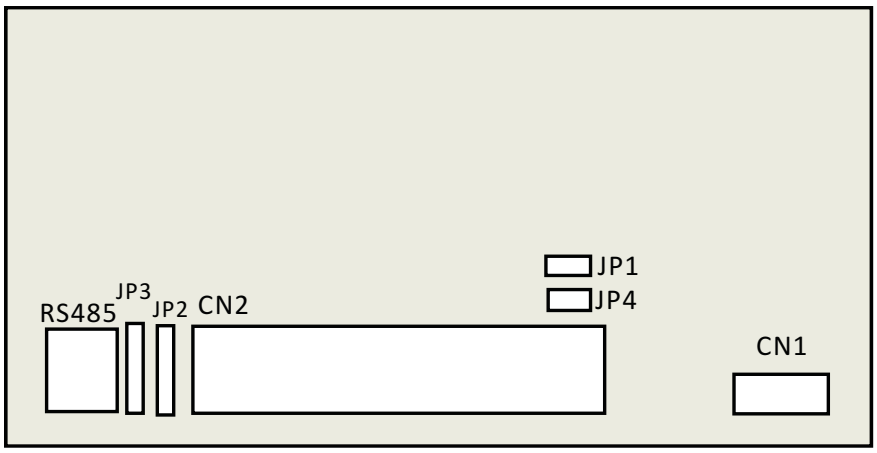

Figure 3-5 Position of terminals and jumpers on control

3.2.4.2 Jumper switch

NO	Function	Setting	FD
JP1	Pulse output terminal DO power selection	1-2 connected: internal24V power of inverter 2-3 connected: external power	external power
JP2	Analog output terminal current/voltage output selection	1-2: 0~10V: AO1 output voltage signal 2-3: 4~20mA: AO1 output current signal	0~10V
JP3	0~10VTerminal CI current/voltage Input selection	1-2: V side, 0~10 V voltage signal 2-3: I side, 4~20 mA current signal	0~10V
JP4	X6 terminal input mode selection	1-2: PLC side，X6 used as multifunctional terminal 2-3: FCH side：X6 used as an external pulse input	PLC side

Table 3-2 Jumper switch function

3.2.4.3 Function of CN 1 terminal

Sort	Terminal	Name	Function Description	Specification
Relay output termina	TA/RA	Multi functi onal relay output terminal	Can be defined as multifunctional Relay output terminal by programming, refer to Chapter6.5P4.12,P4.13	TA-TC: NC TA-TB: Normally open contact capacityAC250V/2A (COSΦ=1) AC250V/1A (COSΦ=0.4) DC30V/1A
	TB/RB			
	TC/RC			

Table 3-3 CN 1 terminal function

3.2.4.4 Function of CN 2 terminal

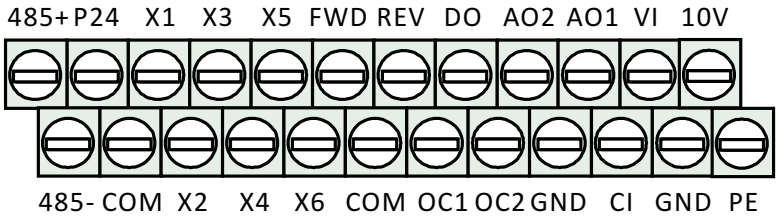

Figure 3-6 CN2 terminal order

Sort	Terminal	Name	Function Description	Specification
Communication	485+	Rs485 communication port	Rs485 differential signal positive terminal	Twisted or shielded wire needed
	485-		Rs485 differential signal negative terminal	
Multifunctional output terminal	OC1	Open collector output terminal 1	Can be defined as multifunctional on-off output terminal by programming, refer to Chapter 6.5P4.10 (Common port: COM)	Couple isolated output Working voltage: 9~30V Max.outputcurrent:50mA
	OC2	Open collector output terminal 2	Can be defined as multifunctional on-off output terminal by programming, refer to Chapter 6.5P4.11 (Common port: COM)	Couple isolated output Working voltage: 9~30V Max.outputcurrent:50mA
Pulse output terminal	DO	Open collector pulse Output terminal	Can be defined as multifunctional Pulse output terminal by programming,Refer to Chapter 6.5P4.21/P4.22 (Common port: COM)	Max. output frequency: 20KHz output freq range defined by P4.21
Analog input	VI	Analog input VI	Analog voltage input (Grounding: GND)	Input voltage range:0~10V (input resistance:10KΩ) Resolution: 1/1000
	CI	Analog input CI	Analog voltage/current input,Choose voltage or current input by Setting JP3 jumper. Factory default: voltage input(Grounding: GND)	Inputvoltagerange:0~10V (input resistance:10KΩ) Inputcurrentrange:0~20mA (input resistance:500Ω) Resolution: 1/1000

Sort	Terminal	Name	Function Description	Specification
Analog output	AO1	Analog output AO1	Analog voltage/current output, indicating 7quantities, choose Voltage or current output by setting JP2 jumper. Factory default: voltage output (Grounding: GND)	Current output range: 4~20mA Voltage output range: 0~10V
	AO2	Analog output AO2	Analog voltage output, indicating 7quantities(Grounding: GND)	Voltage output range: 0~10V
Running	FWD	Forward	Refer to chapter 6.5 P4.08	Couple isolated input Input resistance:2KΩ
	REV	Reverse		
Multifunctional input terminal	X2	Multifunctional input terminal 2		input frequency:200Hz Input voltage range: 9~30V 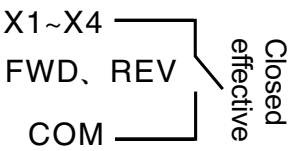
	X3	Multifunctional input terminal 3		
	X4	Multifunctional input terminal 4		
	X5	Multifunctional input terminal 5		
	X6	Multifunctional input terminal 6		
Power source	P24	+24Vpower source	Supply +24V power (negative terminal: COM)	
	10V	+10Vpower source	Supply+10Vpower(negative terminal: GND)	Max. output current: 50mA
	GND	+10Vcommon port	Grounding of analog signal and+10V power source	Terminal COM and GND are Isolated inside
	COM	+24Vcommon port	Digital signal input, output common port	

Table 3-4 CN 2 terminal function

3.2.5 Analog Input/Output Terminal Wiring

① Analog voltage signal input through VI terminal as follow wiring：

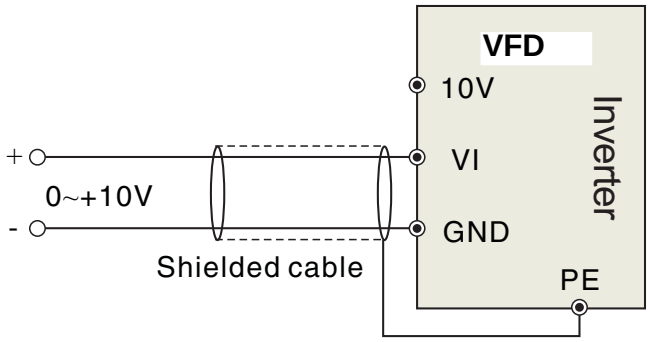

Figure 3-7 VI terminal wiring

② Analog signal input through CI terminal, jumper selection for input voltage (0~10V) or input current (4~20mA) as follow wiring：

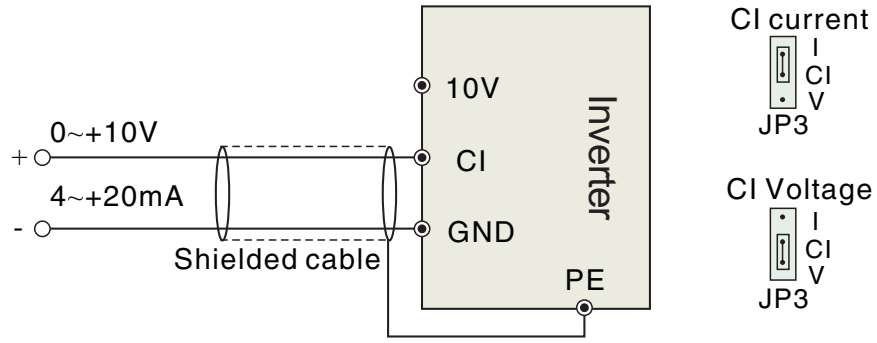

Figure 3-8 CI terminal wiring

③ Analog output terminal AO wiring

Analog output terminal can be connected with external analog meter indicating various physical quantity, jumper selection for output voltage (0~10V) or output current (4~20mA) as follow wiring.

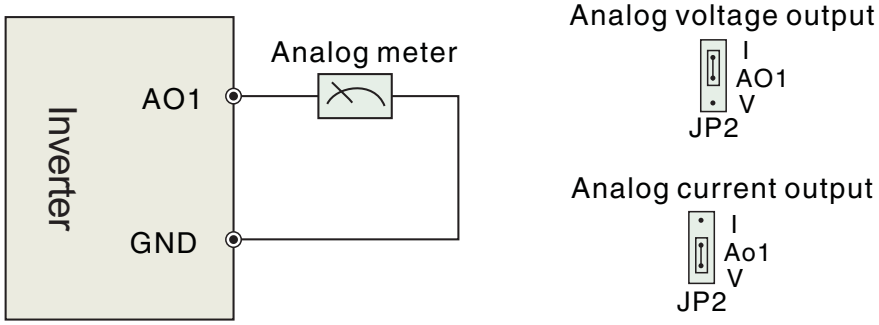

Figure 3-9 Analog output terminal wiring

NOTES:

- Filter capacitor or common-mode inductor can be installed between VI And GND terminal or CI and GND terminal when using analog input mode.
- Please use shielded cable and do well grounding , keep the wire as short as possible in order to prevent external interference when using analog input/o output mode.

3.2.6 Communication Terminal Wiring

The RS485 port supports a PC/PLC master and one or more drives. The host can monitor operating data and issue commands.

A compatible remote keypad may also be used. Local and remote controls can both remain active; secure all command sources before servicing.

Observe 485+ / 485- polarity and the supplied cable pinout. Figure 3-10 shows a typical RS485-to-RS232 interface arrangement.

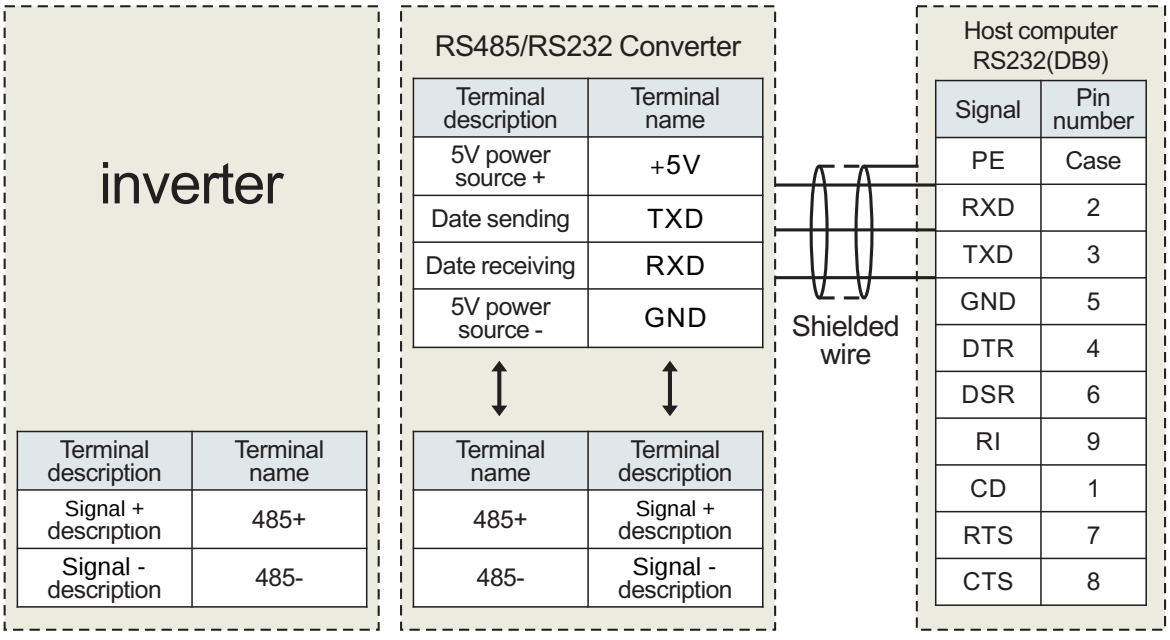

Figure 3-10 RS485-(RS485/232)-RS232 communication wiring

➢ Multi inverters can communicate via RS485, controlled by PC/PLC as a Master shown as Fig.3-11. It also can be controlled by one of inverters as a Master shown as Fig.3-12.

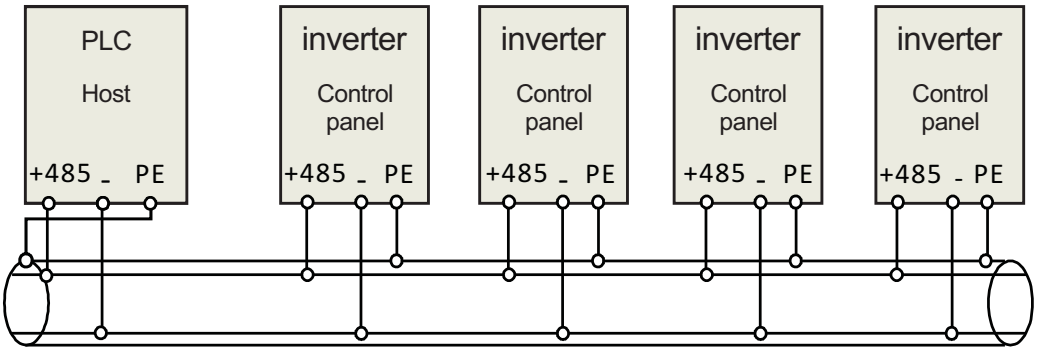

Figure 3-11 PLC communication with multi inverters

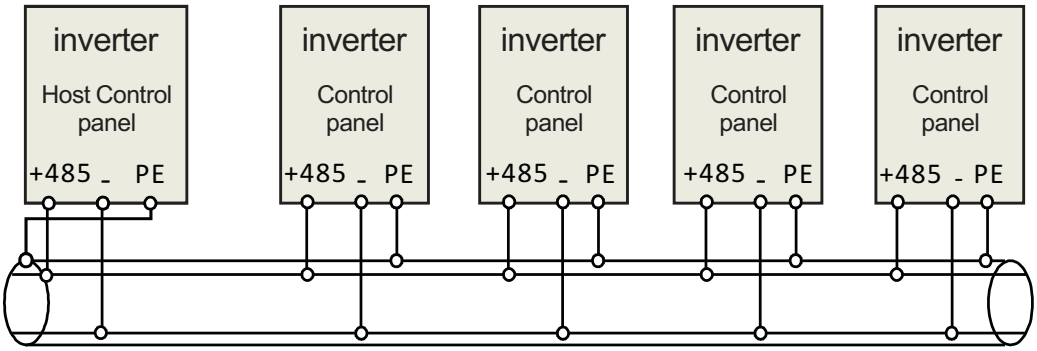

Figure 3-12 Multi inverters communication

The more inverters connected, the more the communication interference may occur. Please make wiring as above and do well grounding for inverters and motors, or adopt the following measures to prevent interference as even above wiring can't work.

❶ Separately power supply to PC/PLC or isolated the power of PC/PLC;

❷ Use EMIFIL to the wire or reduce carrier frequency properly.

3.3 Single-phase motor applications

> **APPLICATION MUST BE CONFIRMED**
>
> The following single-phase motor examples apply only when Larson Electronics has confirmed the compatibility of the exact drive, motor and firmware. They do not apply automatically to a single-phase-input / three-phase-output phase converter.

Single-phase induction motors may contain a main winding, an auxiliary winding, starting or running capacitors and a centrifugal switch. Their behavior differs from that of three-phase motors. Incorrect winding connections or inappropriate capacitor arrangements can overheat or damage the motor.

- Before making any change, obtain the motor connection diagram and the approved drive application instructions. Do not remove capacitors, bypass switches or reconnect internal windings solely from a generic illustration.
- Direction of rotation may require motor-winding reconnection. Do not assume that swapping two drive output wires or changing a direction parameter will produce safe reverse operation.
- For approved non-removable-capacitor applications, the motor nameplate CW/CCW connection governs direction. The drive-specific instructions must confirm the output terminals and parameter settings to use.
- Avoid sustained operation below 80% of the motor rated frequency in these single-phase motor applications, unless the motor and drive application instructions specifically permit it.

Sections 3.3.1 through 3.3.3 illustrate motor construction and connection arrangements. Keep the motor disconnected from power while identifying windings or changing connections.

Single-phase motor examples - use only with confirmed drive and motor compatibility.

3.3 Wiring with Single phase motor

3.3.1 Single phase motor introduction

Single phase motor generally means asynchronous single phase motor powered by single phase AC 220V, there're two phase winding in motor stator and motor rotor is common squirrel cage. The distribution of two phase winding and different power supply will lead to different starting characteristics and operating characteristics

Usually single phase motor is with single capacitor or double capacitor, photos of motor are as below:

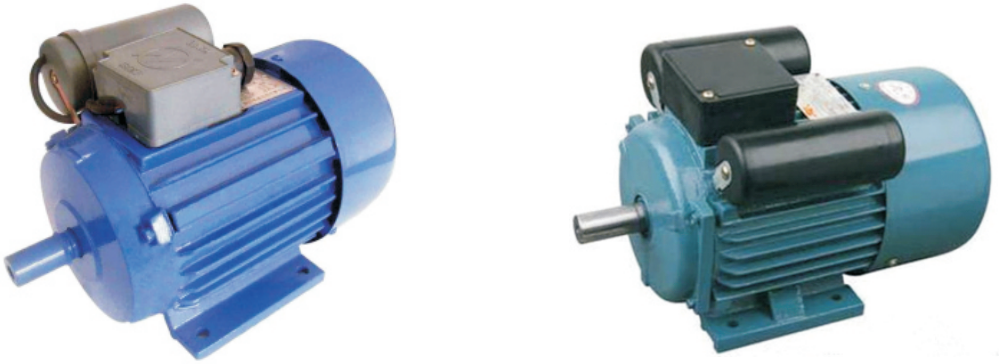

Figure 3-13 Motor with single capacitor and double capacitor

Single phase motor is consisted of main winding, secondary winding, capacitor and centrifugal switch, internal wiring of single phase motor with single capacitor is as below:

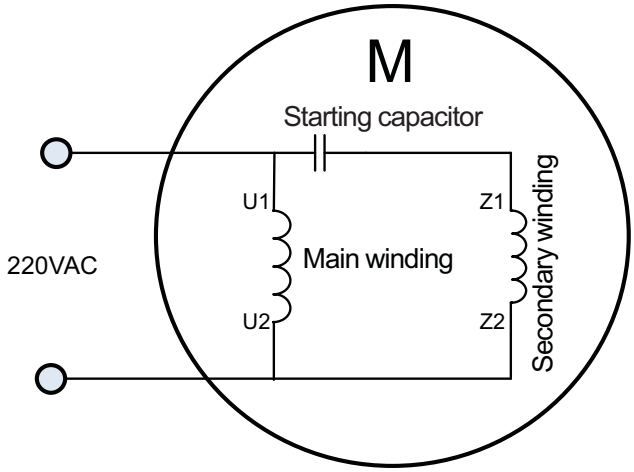

Figure 3-14 Operation mode: Internal wiring of motor with single capacitor

Single-phase motor examples - use only with confirmed drive and motor compatibility.

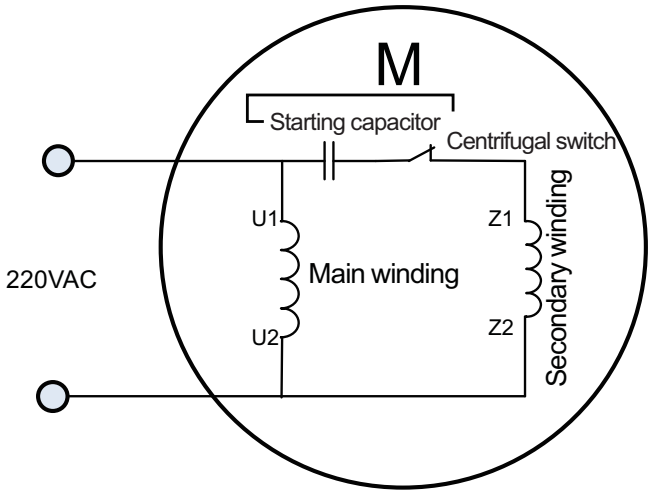

Figure 3-15 Starting mode: Internal wiring of motor with single capacitor

Internal wiring of single phase motor with double capacitors is as below:

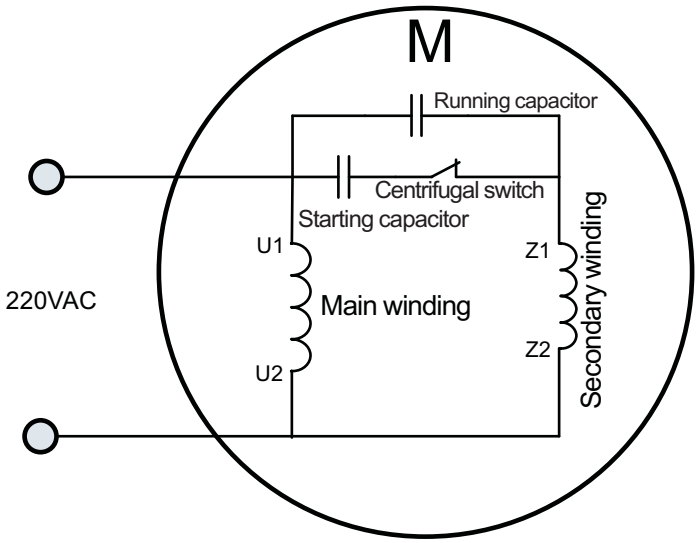

Figure 3-16 Internal wiring of motor with double capacitors

Single-phase motor examples - use only with confirmed drive and motor compatibility.

Resistor starting mode single phase motor, and internal wiring is as below:

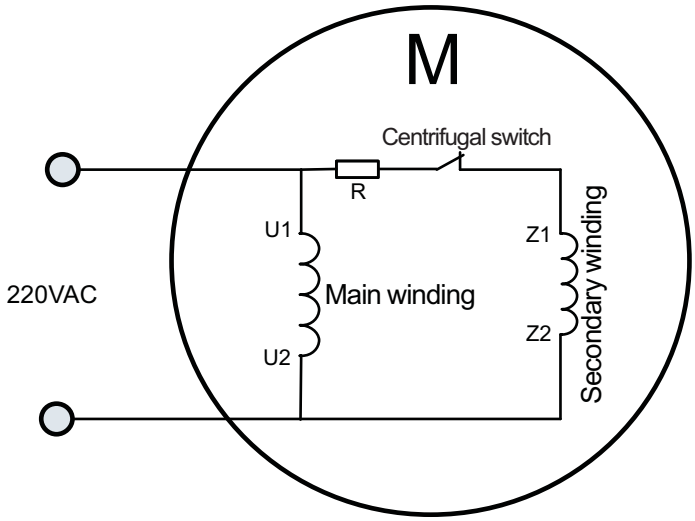

Figure 3-17 Resistor starting mode: Internal wiring of motor

After removing the capacitors from above motors, remain 4 main and secondary winding terminals as below:

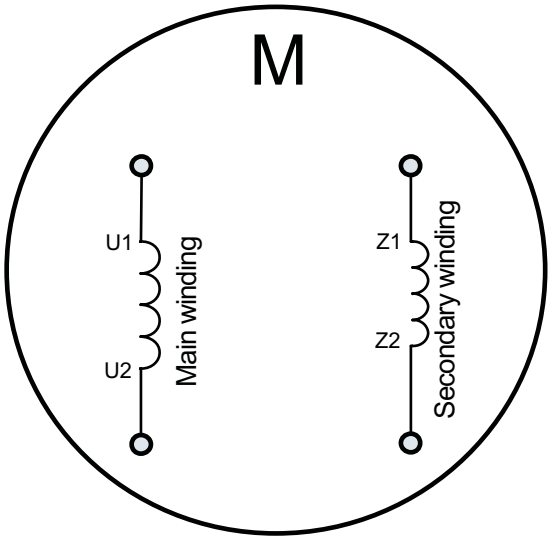

Figure 3-18 Main and secondary winding of motor (After removing the capacitors)

Single-phase motor examples - use only with confirmed drive and motor compatibility.

3.3.2 Wiring between VFD and motor (Capacitor removable)

Connect main and secondary winding of motor to inverter UVW, then inverter can work. But due to the motor winding difference, motor forward wiring must be as below, if not cause motor too heat.

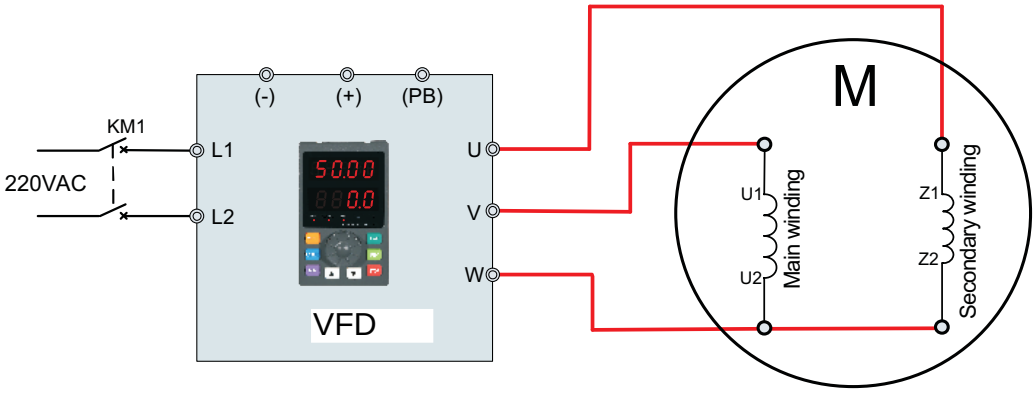

Figure 3-19 Forward wiring between VFD and motor

Motor reverse can't be completed through parameter setting of inverter or change any two phase wirings, motor reverse wiring must be as below:

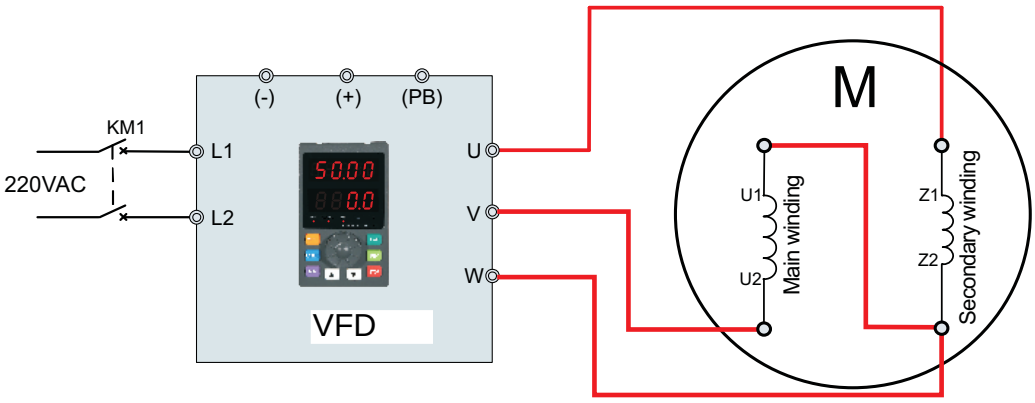

Figure 3-20 Reverse wiring between VFD and motor

Single-phase motor examples - use only with confirmed drive and motor compatibility.

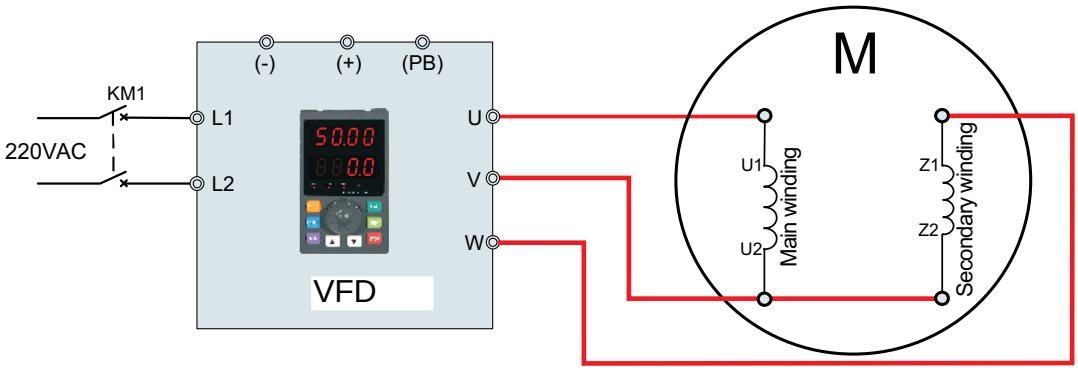

Figure 3-21 Forward wiring between VFD and motor

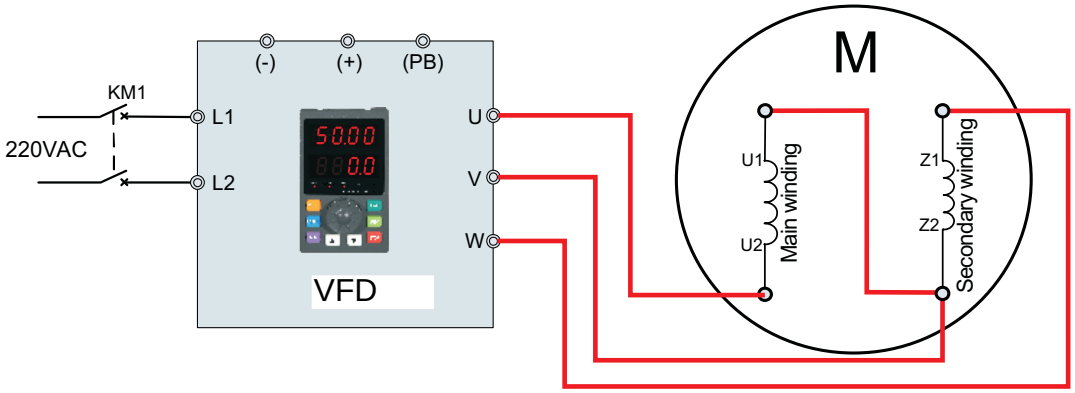

Figure 3-22 Reverse wiring between VFD and motor

Note: After wiring completed, need to set P9.13=1(Thousand's digit).

3.3.3 Wiring between VFD and motor (Non-removable capacitor)

If the capacitor in motor is Non-removable, the forward and reverse is determined by CW and CCW connection mode indicated by the motor nameplate. And the power supply of single-phase motors can be connected to the VFD any two output terminals (U&V, or U&W,or V&W), the wiring is as below.

Single-phase motor examples - use only with confirmed drive and motor compatibility.

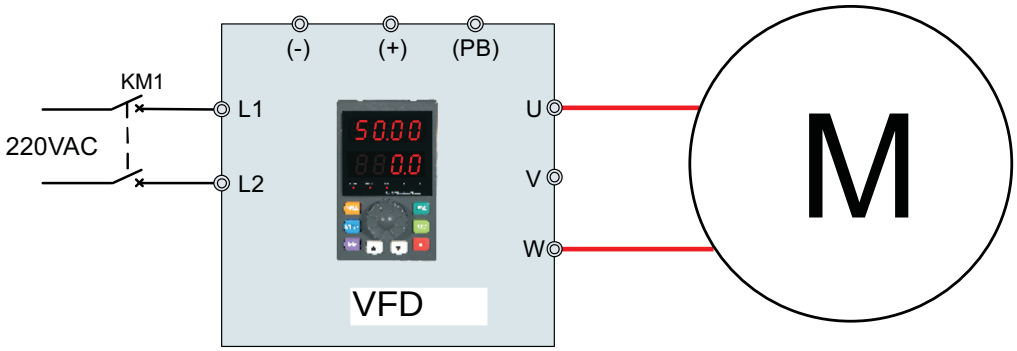

Figure 3-23

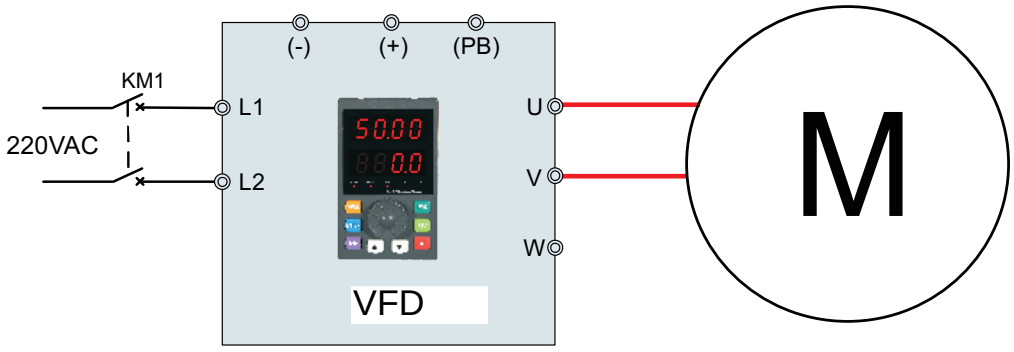

Figure 3-24

Note:
The single motor should Not be adjusted to run based on a lower frequency than 80% of its rated frequency for along time, otherwise the motor may fail.

3.4 EMC Installation Instruction

Inverter outputs PWM wave, it will produce electromagnetic noise. To reduce the interference, EMC installation will be introduced in this section from noise suppression, wire connection, grounding, leakage current and filter of power supply.

3.4 EMC installation

3.4.1 Noise suppression

PWM switching can produce conducted and radiated electrical noise. Its effect depends on the drive, cable routing, grounding, cabinet construction and sensitivity of nearby equipment.

Noise path	Control measures
Signal / ground loops	Review signal grounding and use suitable isolation where needed. Never remove protective equipment grounding to cure interference.
Shared incoming supply	Use a suitable input filter or an appropriately selected isolation transformer for sensitive peripheral equipment.
Radiated noise	Separate the drive and its power cables from computers, instruments, sensors and their signal wiring. Use suitable shielded cable and bonded metal raceways where required.
Inductive / capacitive coupling	Do not bundle signal cables with input or motor cables. Use separate routes and cross at right angles where crossing is unavoidable.
Motor output	Use motor cable and shielding suitable for PWM drive service. Bond the motor frame and drive protective-earth terminal. Select output filters or reactors specifically approved for the drive.

3.4.2 Cable routing and grounding

- Maintain at least 30 cm between incoming power and motor cables where practicable. Keep control signal cables at least 20 cm from power and motor cables.
- Use shielded control cables and connect shields according to the supplied wiring instructions. Route protective-ground conductors directly to the grounding/bonding point.
- Do not use the drive input terminals as a distribution point for unrelated equipment. Keep all required protective-earth connections intact.

4.1 Initial Power on Operation

After inspecting cable connection and power source for sure, switch on inverter input AC power switch. The inverter's LED on control panel will display dynamic start menu. When it displays set frequency, it means initialization has been completed :

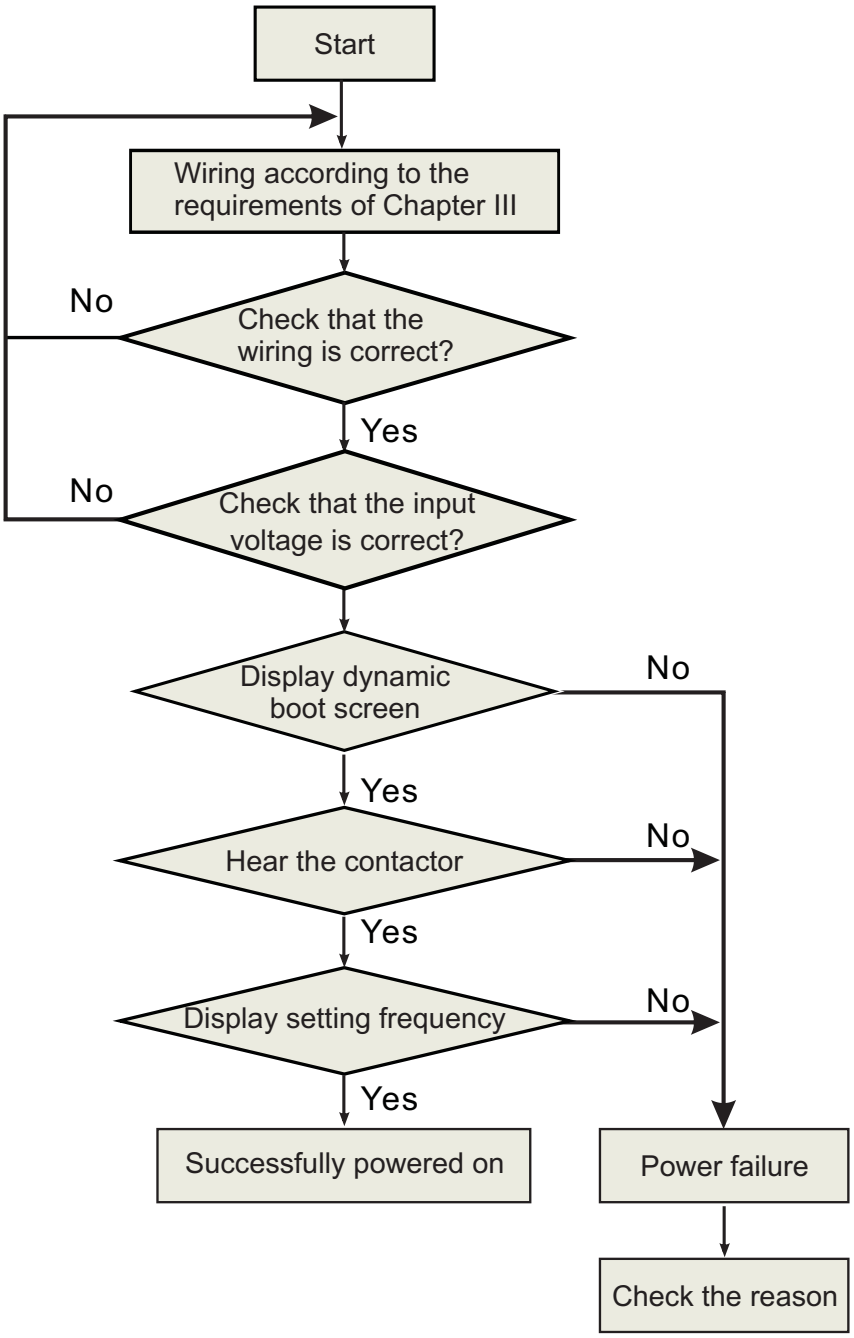

Figure 4-1 Inverter first power applied operation

4.2 Running of Inverter

4.2.1 Running Command Channels

Channel	Control method
Control panel	Use FWD 、STOP 、▲ ▼ Keys o on the panel to control the inverter. (Factory default)
Control terminal	Use terminal FWD,REV, COM to constitute a 2-wire control mode, or use one of terminals amongX1~X6 and FWD, REV to constitute a 3-wire control mode.
Serial port	⌑ Use upper computer (PC/PLC) or Master inverter to control Slave inverter to start or stop via serial port. ⌑ The command channels can be selected by setting Function Code P0.03, or by multifunctional input terminal (function code P4.00-P4.07).

Table 4-1 Running Command Channels

Note :
These three channels are all switchable. Please make debugging before switch so as to avoid equipment damage and personal injury.

4.2.2 Frequency setting channel

There are 8 kinds of frequency setting channels as follow:

Number	Channel	Number	Channel
0	by control panel potentiometer	1	by ▲ ▼ control panel keys
2	digital setting by function code via control panel	3	via terminal UP/DOWN
4	by upper computer via serial port	5	analog setting via VI terminal
6	analog setting via CI terminal	7	via pulse terminal
8	combination setting		

Table 4-2 Frequency setting channel

4.2.3 Inverter Running States

There are 8 kinds of frequency setting channels as follow:

Channel	Control method
Standby state	When power switch on, inverter will be in standby state before receiving control command. Or receiving Stop command during inverter running, inverter will stop and standby.
Running state	After running control command is received, the inverter enters running state.

Table 4-3 Inverter Running States

4.2.4 The Running Modes of Inverter

There are five running modes according to priority which are JOG running, close loop running, PLC running, multi-stage speed running, and normal running as shown in Fig.4-4.

Running Modes	Control method
0：JOG running	In stopping state, after receiving JOG running command, the inverter will run according to JOG frequency, for example, by pressing control panel REV key to give JOG command(refer to function codeP3.06~P3.08).
1：Close loop running	By setting close loop running control parameter enabled (P7.00=1), the inverter will enter close loop running, that is PI regulation (refer to function code P7). To make close loop running invalid, please set multifunctional input terminal (function27) and switch to lower priority running mode.
2：PLC running	By setting PLC function parameter enabled (P8.00 ≠0), the inverter will enter PLC running mode and run according to preset running mode (refer to function code P8).To make PLC running invalid, please set multifunctional input terminal (function29) and switch to lower priority running mode.
3：Multi-stage speed running	By setting non-zero combination of multifunctional input terminal (function1,2,3) and selecting multi-frequency 1-7, the inverter will enter multi-stage speed running mode(refer to function codeP3.26~P3.32).
4：Normal running	Simple open loop running mode of inverter.

Table 4-4 The Running Modes of Inverter

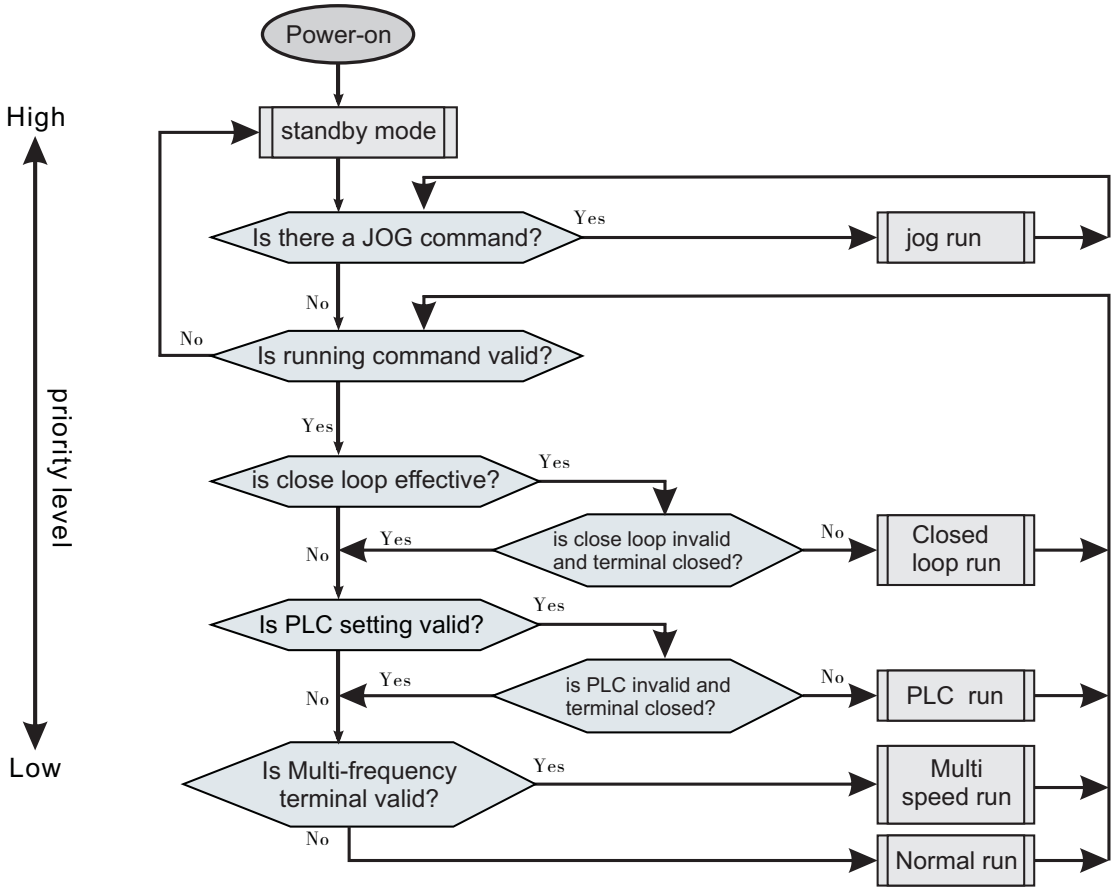

Figure 4-2 Running mode logic diagram

The above 5 kinds of running modes can be running in multiple frequency setting channel except JOG running. PLC running, multi-stage speed running and normal running can carry out swing frequency running

4.3 Introduction of the keypad

4.3.1 Keyboard interface

User can control inverters' start, frequency adjust, stop, braking, setupthe running parameters and control peripheral equipment through control panel and control terminal.

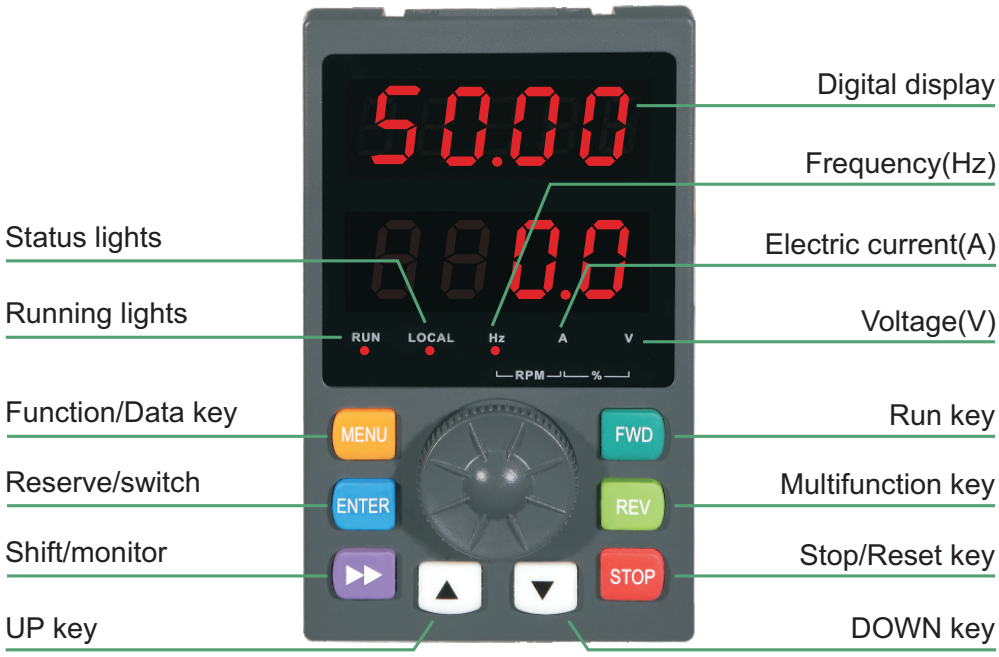

Figure 4-3 Control panel diagram

4.3.2 Keyboard Introduction

Name	Function Description		
Status indicator	RUN	In keypad mode, pressing the key, inverter will run	
	LOCAL	○ LOCAL/REMOT : OFF	Operation panel control
		● LOCAL/REMOT : PN	Terminal control
		◑ LOCAL/REMOT : Flash	Communication control
Unit indicator	It represents the current display of the Keypad		
	Hz	● Hz ○ A ○ V; RPM; %	Frequency unit
	A	○ Hz ● A ○ V; RPM; %	Current unit
	V	○ Hz ○ A ● V; RPM; %	Voltage unit
	RPM	● Hz ● A ○ V; RPM; %	Speed unit
	%	○ Hz ● A ● V; RPM; %	Percentage

<table>
<tr><th>Name</th><th colspan="4">Function Description</th></tr>
<tr><td>Code Display Zone</td><td colspan="4">There are a 4 digits LED display,display displays various monitoring data and alarm code such as set frequency and output frequency.
<table>
<tr><th>Display letter</th><th>Corresponding letter</th><th>Display letter</th><th>Corresponding letter</th><th>Display letter</th><th>Corresponding letter</th></tr>
<tr><td>0</td><td>0</td><td>1</td><td>1</td><td>2</td><td>2</td></tr>
<tr><td>3</td><td>3</td><td>4</td><td>4</td><td>5</td><td>5</td></tr>
<tr><td>6</td><td>6</td><td>7</td><td>7</td><td>8</td><td>8</td></tr>
<tr><td>9</td><td>9</td><td>A</td><td>A</td><td>b</td><td>b</td></tr>
<tr><td>C</td><td>C</td><td>d</td><td>d</td><td>E</td><td>E</td></tr>
<tr><td>F</td><td>F</td><td>H</td><td>H</td><td>I</td><td>I</td></tr>
<tr><td>L</td><td>L</td><td>n</td><td>N</td><td>n</td><td>n</td></tr>
<tr><td>o</td><td>o</td><td>P</td><td>P</td><td>r</td><td>r</td></tr>
<tr><td>S</td><td>S</td><td>t</td><td>t</td><td>U</td><td>U</td></tr>
<tr><td>v</td><td>v</td><td>.</td><td>.</td><td>-</td><td>-</td></tr>
</table></td></tr>
<tr><td>Digital potentiometers</td><td></td><td colspan="3">Left rotary, the same function as UP key. Right rotary, the same function as DOWN KEY Pressing potentiometer, the same function as ENTER</td></tr>
<tr><td rowspan="9">Keypad button zone</td><td>FWD</td><td>Run</td><td colspan="2">In keypad mode, pressing the key, inverter will run</td></tr>
<tr><td>REV</td><td>Multifunction</td><td colspan="2">REV key is defined as Reverse function. It is also self-defined key which can be set by Parameter</td></tr>
<tr><td>STOP</td><td>Stop/Reset</td><td colspan="2">Inverter in running status, pressing the key will stop inverter when command given by keypad. In fault status, pressing the key can reset</td></tr>
<tr><td>MENU</td><td>Function/Data</td><td colspan="2">Enter or exit programming status</td></tr>
<tr><td>▲</td><td>UP</td><td colspan="2">Data or function code increment</td></tr>
<tr><td>▼</td><td>DOWN</td><td colspan="2">Data or function code increment</td></tr>
<tr><td>▶▶</td><td>Shift/Monitor</td><td colspan="2">In programming, the key can shift code digit. In other status, the key can shift monitoring parameter</td></tr>
<tr><td>ENTER</td><td>Reserve/ switch</td><td colspan="2">In programming, the key can enter next step manual or reserve the setting</td></tr>
</table>

Table 4-5 Keyboard function description

4.4 Control Panel Display State

The control panel display state includes parameter displaying in stopping state, function code parameter displaying in programming state, fault displaying in alarm state, and parameter displaying in running state.

4.4.1 Stopping state Parameter display

When inverter is in stopping state, panel displays stopping state monitoring parameter which usually is setting frequency (b-01 monitoring parameter) shown as Fig.4-4 B.

Press ▶▶ key to display the other monitoring parameter (The inverter default displays the first 7 monitorting paratmeters of b group. The other parameters can be defined by function code P3.41 and P3.42. Please refer to Chapter 5). Press key for switching to default display parameter b-01,which is setting frequency, or it will display the last monitoring parameter.



Figure A
Power on to initialize the display dynamic picture

Figure B
Stop status, display downtime parameter

Figure C
Running status, showing the operating status parameters

Figure 4-4 Parameter display in initialization, stopping and running state

4.4.2 Parameter displaying in running state

The inverter enters running state after receiving valid running command, and the panel displays running state monitoring parameter. The default displaying is output frequency (b-00 monitoring parameter) shown as Fig.4-4 C.

Press ▶▶ key can display the monitoring parameter in running state (defined by function code P3.41 and 3.42). While parameter displaying, press ENTER key for switching to default display parameter b-00, that is output frequency, or it will display the last monitoring parameter.

4.4.3 Fault displaying in alarm state

The Inverter enters fault alarm display state after fault signal detected. The displayed fault code will be flashing.

Press ▶▶ key to check fault related parameter. When checking fault related parameter, press ENTER key for switching to Fault code display.

Press MENU key to enter programming state to check P6 group parameter of fault information After troubleshooting, press STOP key to reset the inverter (or via control terminal/serial port) If the fault still exists, it will keep displaying the fault code.



Figure 4-5 Fault alarm display state

Note :
To some serious fault such as IGBT protection,over current, over voltage, etc. Don't reset the inverter before clearing the fault for sure, otherwise there is a danger of damage.

4.4.4 Function code programming state

In the state of stopping, running, and fault alarm, press MENU key to enter programming state (A password is required, If it has been set. Please refer to P0.00 description and Fig.4-9). The programming state includes three level display menus shown as Fig.4-6 which in order are function code group → function code number → function code parameter. Press ENTER key to enter each menus. When in function code parameter display menu, press ENTER key to save parameter, press ENTER key to go back to previous menu without parameter saving.

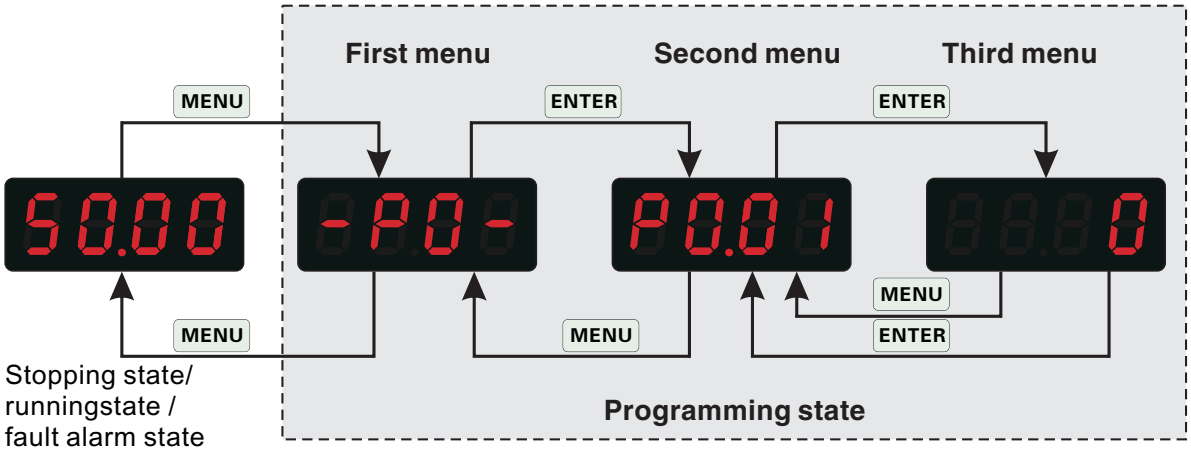

Figure 4-6 Control panel programming state

4.5 Keyboard operation

Through the operating panel of inverter for various operations, for example as follows:

4.5.1 Switching display of state monitoring parameter

Press ▸▸ key to display b group state monitoring parameter. It first displays the code of monitoring parameter, after 1 second, it switches automatically to display the value of this monitoring parameter shown as Fig.4-7.

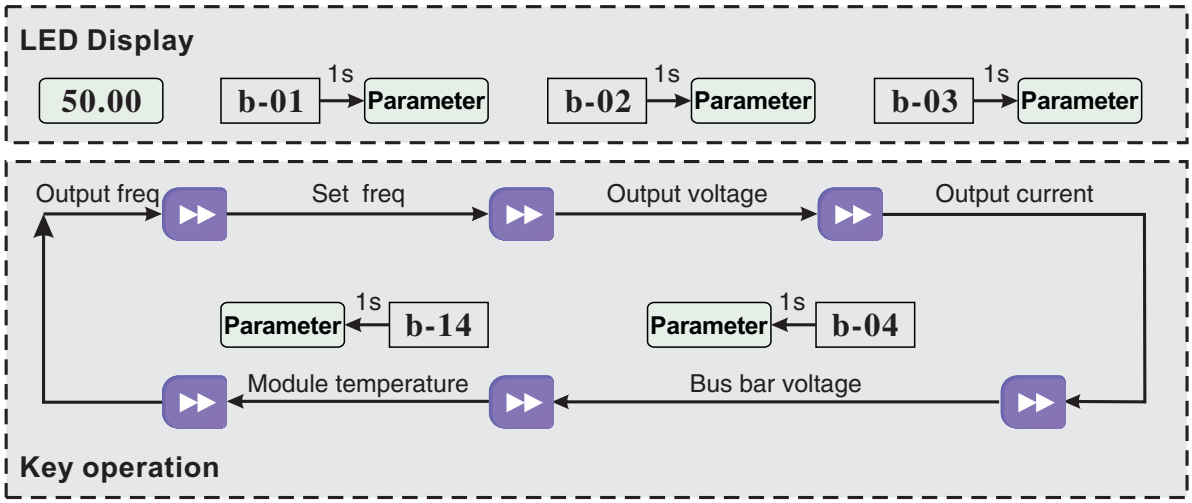

Figure 4-7 Operation to display monitoring parameter

When viewing monitoring parameter, press ENTER key for switching to default monitoring parameter display state. Default monitoring parameter is setting frequency in stopping state. In running state, the default monitoring parameter is output frequency.

4.5.2 Function code parameter setting

For example, to set parameter code P3.06 from 5.00Hz to 8.50Hz.

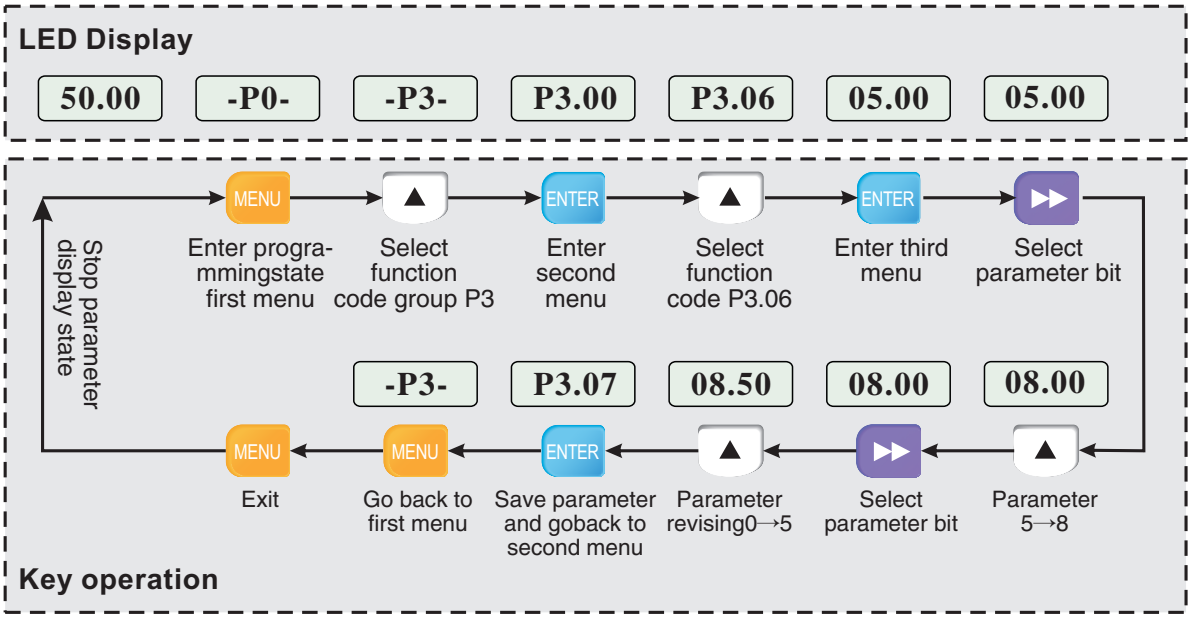

Figure 4-8 Example of function code parameter setting

Note :

In third level menu, if the parameter displayed is not in flashing, it means that this function code is unable to be revised. Probably the reasons are:

- This function code parameter is unmodifiable, such as actual detected state parameter, record running parameter, etc.
- This function code parameter can not be revised in running state. It just can be revised in stopping state.
- The parameter is under protection. When function code P3.01 unit's place is 1 or 2, all function code parameter can not be revised. This is parameter protection to avoid fault operation. Set P3.01 unit's place as 0 to make modification available.

4.5.3 JOG running operation

Following is an example. Suppose it is in panel control mode and in stopping state, JOG running frequency is 5Hz.

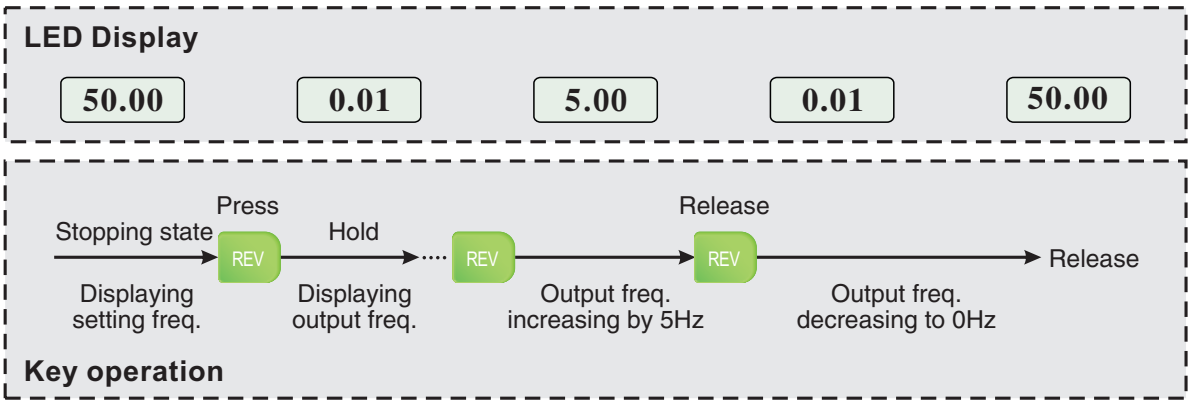

Figure 4-9 JOG running operation

4.5.4 Password authentication operation

Suppose P9.14 password parameter has been set as “2345”. The authentication operation is shown as Fig. 4-10. The bold figure represents the flashing bit.

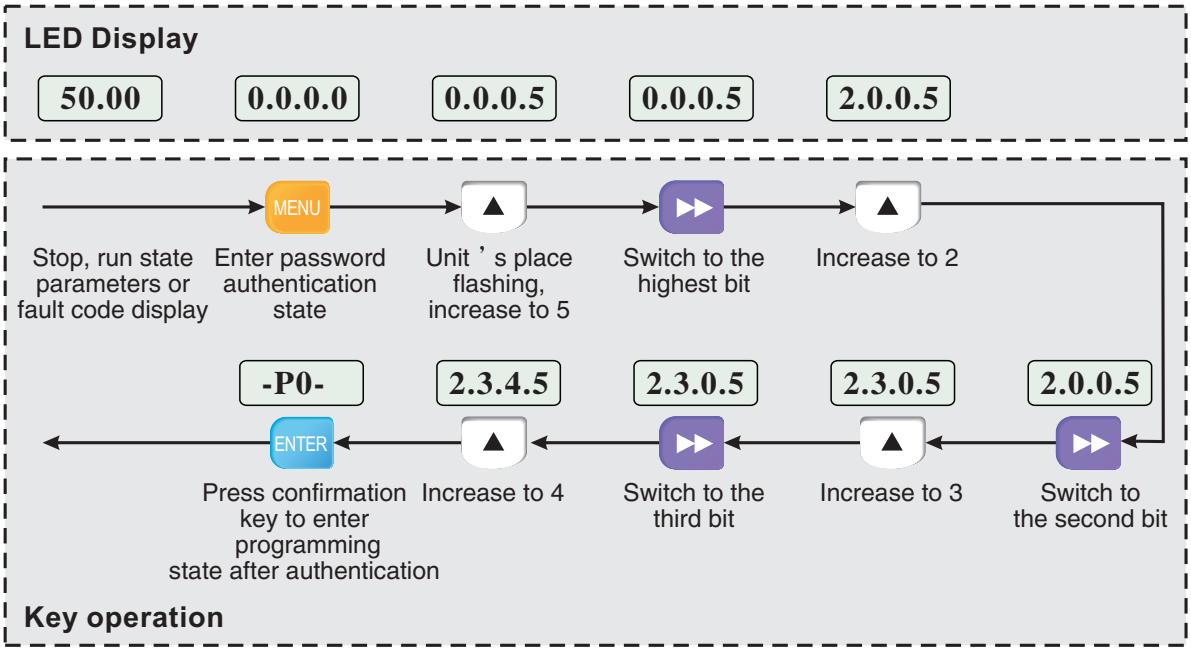

Figure 4-10 Example of password authentication operation

4.5.5 Inquiring fault related parameter

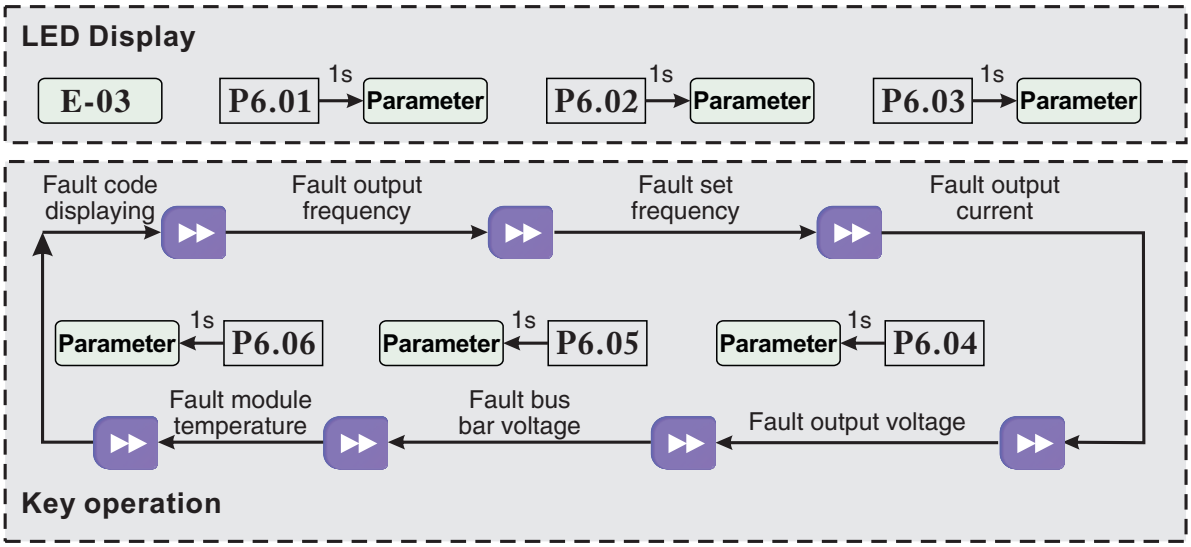

Figure 4-11 Example of inquiring fault related parameter

Note :

- In fault code display state, press ▸▸ key to inquire P6 group function code parameter. The range is from P6.01 to P6.06. After pressing ▸▸ key, LED first displays function code, and1 second later it displays automatically the value of this function code parameter.
- When inquiring fault parameter, press MENU key to switch back to fault code display state.

4.5.6 Frequency setting operation by control panel ▲ 、▼ keys

Suppose it is in stopping state and P0.01=1, the operation is as follow.

- Frequency integral adjustment.
- As press ▲ key and hold it, LED begins to increase from unit's digit to ten's digit, and then to hundred's digit. If release ▲ key and then press ▲ key again, LED will increase from unit's digit again.
- As press ▼ key and hold it, LED begins to decrease from unit's digit to ten's digit , and then to hundred's digit. If release ▼ key and then press ▼ key again, LED will decrease from unit's digit again.

4.5.7 Control panel key lock

Hold MENU for 5 seconds to lock the control panel keys. The display shows LOCC.

4.5.8 Control panel key unlock

Hold MENU for 5 seconds to unlock the control panel keys.

5 Function parameter table

5.1 Symbols and applicability

Mark / term	Meaning
○	The parameter may be changed while running. Change it only when the effect on the load is understood.
×	Stop the drive before changing this parameter.
*	Read-only monitoring or record value.
Factory default	The initial value may depend on model or firmware. Confirm the value on the supplied drive.
Range / minimum unit	Permitted programming range and adjustment increment; these do not override equipment ratings.

PRODUCT LABEL AND MOTOR LIMITS

Use the unit label for electrical ratings. Use the motor nameplate for motor voltage, current, base frequency, speed and power. Set operating limits within the ratings of both the drive and the driven equipment. Not every parameter or option is available on every unit.

5.2 Function code table

The following tables retain the parameter identifiers used by the control panel. Detailed explanations and application diagrams follow in Section 6. Record settings before making changes. Do not alter PF factory functions unless instructed by Larson Electronics.

Before changing motor data, control source, automatic restart, terminal assignments, braking or protection functions, place the equipment in a safe condition and review all affected commands and interlocks.

5.1 Symbol Description

"○": means that the parameter can be modified during running state.

"×": means that the parameter can not be modified during running state.

"*": means read-only parameter which can not be modified.

5.2 Function Code Table

Func Code	Name	Range	Min Unit	Factory Default	Modify
P0 Group: Basic running function parameter					
P0.00	Control mode selection	0：V/F Control 1：Sensorless vector control	1	0	○
P0.01	Freq control channel selection	0：Analog potentiometer on control panel(single display valid) 1：▲、▼key on control panel(single display valid) Panel digital potentiometer+▲、▼key on control panel(double display valid) 2：Digital setting 1,control panel given 3：Digital setting 2, UP/DOWN terminal given 4：Digital setting 3, serial port given 5：VI analog given (VI-GND) 6：CI analog given(CI-GND) 7：Pulse terminal given(PULSE) 8：Combination given (refer to P3.00)	1	0	○
P0.02	Running frequency set	P0.20lower limit freq.~P0.19upper limit freq.	0.01HZ	50.00HZ	○
P0.03	Running command mode selection	0：Control panel mode 1：Terminal control mode 2：Serial port control mode	1	0	○
P0.04	Running direction setting	Unit's digit: 0: Forward 1:Reverse Ten's digit: 0:REV allowed 1:REV prohibited	1	10	○
P0.05	FWD/REV dead time	0.0～120.0s	0.1s	0.1s	○

Func Code	Name	Range	Min Unit	Factory Default	Modify
P0.06	Max output freq.	50.00Hz～500.00Hz	0.01HZ	50.00HZ	×
P0.07	Basic running freq	1.00Hz～500.00Hz	0.01HZ	50.00HZ	×
P0.08	Max output voltage	1～480V	1V	inverter rated voltage	×
P0.09	Torque boost	0.0%～30.0%	0.1%	2.0%	×
P0.10	Torque boost cut-off freq.	0.00Hz～Basic running freq.P0.07	0.00	50.00Hz	○
P0.11	Torque boost mode	0: Manual 1: Auto	1	0	○
P0.12	Carrier freq	1.0K～14.0K	0.1K	8.0K	×
P0.13	Acc/Dec mode selection	0: Linear Acc/Dec 1: Curve Acc/Dec	1	0	×
P0.14	Time of S curve start stage	10.0%～50.0%（Acc/Dec time） P0.14＋P0.15《90%	0.1%	20.0%	○
P0.15	Time of S curve ascent stage	10.0%～80.0%（Acc/Dec time） P0.14＋P0.15《90%	0.1%	60.0%	○
P0.16	Acc/Dec time unit	0: Second 1: Minute	0	0	×
P0.17	Acc time 1	0.1～6000.0	0.1	20.0	○
P0.18	Dec time 1	0.1～6000.0	0.1	20.0	○
P0.19	Upper limit freq.	Lower limit freq. ～Max output freq.P0.06	0.01Hz	50.00Hz	×
P0.20	Lower limit freq.	0.00Hz～Upper limit freq.	0.01Hz	0.00Hz	×
P0.21	Lower limit freq. Running mode	0: Running at lower limit freq 1: Stopping	1	0	×
P0.22	V/F curve setting	0: Constant torque curve 1: Reduced torque curve 1 (1.2 times the power) 2: Reduced torque curve 2 (1.7 times the power) 3: Reduced torque curve 3 (2.0 times the power) 4: Customized V/F curve	1	0	×

Func Code	Name	Range	Min Unit	Factory Default	Modify
P0.23	V/F Freq.valueP3	P0.25～P0.07 Basic running freq.	0.01Hz	0.00Hz	×
P0.24	V/F Volt.valueV3	P0.26～100.0%	0.1%	0.0%	×
P0.25	V/F Freq.valueP2	P0.27～P0.23	0.01Hz	0.00Hz	×
P0.26	V/F Volt.valueV2	P0.28～P0.24	0.1%	0.0%	×
P0.27	V/F Freq.valueP1	0.00～P0.25	0.01Hz	0.00Hz	×
P0.28	V/F Volt.valueV1	0～P0.26	0.1%	0.0%	×
P1 Group: Basic running function parameter					
P1.00	Analog filtering time constant	0.01～30.00s	0.01s	0.20s	○
P1.01	VI channel gains	0.01～9.99	0.01	1.00	○
P1.02	VI min given	0.00～P1.04	0.01Hz	0.00V	○
P1.03	Corresponding freq. to VI min given	0.00～Upper limit freq.	0.01Hz	0.00Hz	○
P1.04	VI max given	P1.04～10.00V	0.01V	10.00V	○
P1.05	Corresponding freq.	0.00～Upper limit freq.	0.01Hz	50.00Hz	○
P1.06	CI channel gains	0.01～9.99	0.01	1.00	○
P1.07	CI min given	0.00～P1.09	0.01V	0.00V	○
P1.08	Corresponding freq. to CI min given	0.00～Upper limit freq	0.01Hz	0.00Hz	○
P1.09	CI max given	P1.07～10.00V	0.01V	10.00V	○
P1.10	Corresponding freq.to CI max given	0.00～Upper limit freq	0.01Hz	50.00Hz	○
P1.11	Max input pulse freq	0.1～20.0K	0.1K	10.0K	○
P1.12	Pulse min given	0.0～P1.14(Pulse max given)	0.1K	0.0K	○
P1.13	Corresponding freq.to pulse min given	0.00～Upper limit freq	0.01Hz	0.00Hz	○
P1.14	Pulse max given	P1.12(Pulse min given)～ P1.11(Max input pulse freq.)	0.1K	0.1K	○
P1.15	Corresponding freq.to pulse max given	0.00～Upper limit freq	0.01Hz	50.00Hz	○

Func Code	Name	Range	Min Unit	Factory Default	Modify
P2 Group: Start/Brake function parameter					
P2.00	Start running mode	0: Start from start freq. 1: Brake first, then start from start freq. 2: Track speed, then start.	1	0	×
P2.01	Start freq.	0.40～20.00Hz	0.01Hz	0.50Hz	○
P2.02	Start freq. running duration	0.0～30.0s	0.1s	0.0s	○
P2.03	DC brake current as start	0～15%	1%	0%	○
P2.04	DC brake time as start	0.0～60.0s	0.1s	0.0s	○
P2.05	Stop mode	0: Dec 1: Free Stop 2: Dec+ DC brake	1	0	×
P2.06	Start freq. of DC brake as stop	0.0～15.00Hz	0.0Hz	3.00Hz	○
P2.07	DC brake time as stop	0.0～60.0s	0.1s	0.0s	○
P2.08	DC brake current as stop	0～15%	1%	0%	○
P3 Group :Auxiliary running parameter					
P3.00	Freq. control channel combination	0: VI＋CI 1: VI－CI 2: External pulse given＋VI＋control panel▲、▼key given 3: External pulse given－VI－control panel▲、▼key given 4: External pulse given＋CI 5: External pulse given－CI 6: RS485 given＋VI＋control panel▲、▼key given 7: RS485 given－VI－control panel▲、▼key given 8: RS485 given＋CI＋control panel▲、▼key given	1	0	×

Func Code	Name	Range	Min Unit	Factory Default	Modify
P3.00	Freq. control channel combination	9: RS485 given－CI－control panel▲、▼key given 10: RS485 given＋CI＋External pulse given 11: RS485 given－CI－External pulse given 12: RS485 given＋VI＋External pulse given 13: RS485 given－VI－External pulse given 14: VI＋CI＋control panel▲、▼ key given ＋digital given (P0.02) 15: VI＋CI－control panel▲、▼ key given ＋digital given (P0.02) 16: MAX（VI，CI） 17: MIN（VI，CI） 18: MAX（VI，CI，PULSE） 19: MIN（VI，CI，PULSE） 20: VI，CI(Availability except 0,VI prior) 21: VI+ Terminal UP/DOWN 22: CI+ Terminal UP/DOWN 23: RS485 setting + panel analog potentiometer fine tuning 24: RS485 setting-panel analog potentiometer 25: RS485 setting + VCI 26: RS485 setting-VCI 27: RS485 setting + CCI 28: RS485 setting-CCI 29: VI + analog potentiometer fine tuning 30: Fine adjustment of CI + analog potentiometer fine tuning 31: VI + analog potentiometer 32: VI-analog potentiometer 33: CI + analog potentiometer 34: CI-analog potentiometer 35: RS485 setting + UPDOWN terminal fine tuning	1	0	×

Func Code	Name	Range	Min Unit	Factory Default	Modify
P3.01	Parameter initialization setting	LED unit's digit: 0: All parameters are allowed to be modified. 1: All parameters are not allowed to be modified except this parameter itself. 2: All parameters are not allowed to be modified except P0.02 parameter and this parameter itself LED ten's digit: 0: Inaction 1: Factory default reset 2: Clear history fault record	1	0	×
P3.02	Parameter copy	0: Inaction 1: Parameter upload 2: Parameter download Note: only valid in remote control mode	1	0	×
P3.03	Auto energy save running	0: Inaction 1: Action	1	0	×
P3.04	AVR function	0: Inaction 1: Always action 2: Inaction only in Dec	1	0	×
P3.05	Slip freq. compensation	0～150%	1%	0%	×
P3.06	JOG running freq.	0.10～50.00Hz	0.01Hz	5.00Hz	○
P3.07	JOG Acc time	0.1～60.0s	0.1s	20.0s	○
P3.08	JOG Dec time	0.1～60.0s	0.1s	20.0s	○
P3.09	Communication configuration	LED unit's place: baud rate selection 0: 1200BPS 1: 2400BPS 2: 4800BPS 3: 9600BPS 4: 19200BPS 5: 38400BPS LED ten's place: data format 0: 1-7-2 Format, without check 1: 1-7-1 Format, odd parity check	1	005	×

Func Code	Name	Range	Min Unit	Factory Default	Modify
P3.09	Communication configuration	2: 1-7-1 Format, even parity check 3: 1-8-2 Format, without check 4: 1-8-1 Format, odd parity check 5: 1-8-1 Format, even parity check 6: 1-8-1 Format, without check LED hundred's place: communication mode 0: MODBUS，ASCII Mode 1: MODBUS，RTU Mode	1	005	×
P3.10	Local address	0～248 0: Broadcast address 248: Host address	1	1	×
P3.11	Communication overtime detection time	0.0～1000.0s 0.0: Function invalid	0.1s	0.0s	×
P3.12	Local response delay	0～1000ms	1s	5ms	×
P3.13	Multi-running proportion	0.01～1.00	0.01	1.00	×
P3.14	Acc time2	0.1～6000.0	0.1	20.0	○
P3.15	Dec time2	0.1～6000.0	0.1	20.0	○
P3.16	Acc time3	0.1～6000.0	0.1	20.0	○
P3.17	Dec time3	0.1～6000.0	0.1	20.0	○
P3.18	Acc time4	0.1～6000.0	0.1	20.0	○
P3.19	Dec time4	0.1～6000.0	0.1	20.0	○
P3.20	Acc time5	0.1～6000.0	0.1	20.0	○
P3.21	Dec time5	0.1～6000.0	0.1	20.0	○
P3.22	Acc time6	0.1～6000.0	0.1	20.0	○
P3.23	Dec time6	0.1～6000.0	0.1	20.0	○
P3.24	Acc time7	0.1～6000.0	0.1	20.0	○
P3.25	Dec time7	0.1～6000.0	0.1	20.0	○
P3.26	Multi-stage freq.1	Multi-stage freq.1	0.01Hz	5.00Hz	○

Func Code	Name	Range	Min Unit	Factory Default	Modify
P3.27	Multi-stage freq.2	Multi-stage freq.2	0.01Hz	10.00Hz	○
P3.28	Multi-stage freq.3	Multi-stage freq.3	0.01Hz	20.00Hz	○
P3.29	Multi-stage freq.4	Multi-stage freq.4	0.01Hz	30.00Hz	○
P3.30	Multi-stage freq.5	Multi-stage freq.5	0.01Hz	40.00Hz	○
P3.31	Multi-stage freq.6	Multi-stage freq.6	0.01Hz	45.00Hz	○
P3.32	Multi-stage freq.7	Multi-stage freq.7	0.01Hz	50.00Hz	○
P3.33	Jump freq.1	0.00～500.00Hz	0.01Hz	0.00Hz	×
P3.34	Jump freq.1range	0.00～30.00Hz	0.01Hz	0.00Hz	×
P3.35	Jump freq.2	0.00～500.00Hz	0.01Hz	0.00Hz	×
P3.36	Jump freq.2range	0.00～30.00Hz	0.01Hz	0.00Hz	×
P3.37	Reserved	0000～9999	1	0000	×
P3.38	Zero frequency DC braking voltage	0.0%～15.0%	0.1%	0.0%	×
P3.39	Set running time	0～65.535K hour	0.001K	0.000K	○
P3.40	Total running time	0～65.535K hour	0.001K	0.000K	○
P3.41	Inspection speed start wait time	00.0～60.0	0.1s	2.0 s	○
P3.42	Inspection speed and start the	00.0～150.0%	0.1%	100.0%	○
P3.43	Running display parameter	00～15	1	00	○
P3.44	Stop display parameter	00～15	1	00	○
P3.45	No unit display coefficient	0.1～60.0	0.1	29.0	○
P3.46	JOG/REV Switching control	0: Select the JOG point operation 1: Select the REV reverse operation	1	0	×

Func Code	Name	Range	Min Unit	Factory Default	Modify
P4 Group: Terminal control function parameter					
P4.00	Input terminal X1 function selection	0: Idle terminal 1: Multi-stage speed control terminal 1 2: Multi-stage speed control terminal 2 3: Multi-stage speed control terminal 3 4: External FWD JOG control input 5: External REV JOG control input 6: Acc/Dec time terminal 1 7: Acc/Dec time terminal 2 8: Acc/Dec time terminal 3 9: 3-wire control 10: Free stop input (FRS) 11: External stop command 12: Stopping DC brake input command DB 13: Inverter running prohibited 14: Freq. increase command(UP) 15: Freq. decrease command(DOWN) 16: Acc/Dec prohibited command 17: External reset input (clear fault) 18: Peripheral equipment fault input (normally open) 19: Freq. control channel selection 1 20: Freq. control channel selection 2 21: Freq. control channel selection 3 22: Command switched to terminal 23: Running command control mode selection 1 24: Running command control mode selection 2 25: Swing frequency selection 26: Swing frequency running reset 27: Close loop invalid 28: Simple PLC pause running command 29: PLC invalid 30: PLC Reset in stopping state 31: Freq. switch to CI 32: Counter trig signal input 33: Counter clear input 34: External interrupt input 35: Pulse freq. input (only valid for X6) 36: Fire mode	1	0	×

Func Code	Name	Range	Min Unit	Factory Default	Modify
P4.01	Input terminal X2 function selection	Ditto	1	0	×
P4.02	Input terminal X3 function selection	Ditto	1	0	×
P4.03	Input terminal X4 function selection	Ditto	1	0	×
P4.04	Input terminal X5 function selection	Ditto	1	0	×
P4.05	Input terminal X6 function selection	Ditto	1	0	×
P4.06	Input terminal X7 function selection	Ditto	1	0	×
P4.07	Input terminal X8 function selection	Ditto	1	0	×
P4.08	FWD/REV running mode selection	0: 2-wire control mode 1 1: 2-wire control mode 2 2: 3-wire control mode 1 3: 3-wire control mode 2	1	0	×
P4.09	UP/DN Rate	0.01-99.99Hz/s	0.01	1.00 Hz/s	○
P4.10	2-way open collector output terminal OC1 output selection	0: Inverter in running(RUN) 1: Freq. arrival signal(FAR) 2: Freq. level detected signal(FDT1) 3: Reserved 4: Overload pre-alarm signal(OL) 5: Under voltage locking(LU) 6: External fault stopping (EXT) 7: Output freq. upper limit(FH) 8: Output freq. lower limit(FL) 9: Inverter in zero speed running 10: Simple PLC stage running finish 11: A PLC running cycle finish 12: Set counts arrival	1	0	×

Func Code	Name	Range	Min Unit	Factory Default	Modify
P4.10	2-way open collector output terminal OC1 output selection	13: Specified counts arrival 14: Inverter ready for running(RDY) 15: Inverter fault 16: Start freq. running time 17: DC brake time when start 18: DC brake time when stop 19: Swing freq. upper/lower limit 20: Set running time arrival 21: Upper limit of pressure alarm signal 22: Lower pressure alarm signal 23: Zero-frequency sleep state output	1	0	×
P4.11	2-way open collector output terminal OC2 output selection	Ditto	1	0	×
P4.12	Relay TA/TB/TC output selection	Ditto	1	15	×
P4.13	Relay RA/RB/RC output selection	Ditto	1	0	×
P4.14	Freq. arrival detection range	0.00～400.00Hz	0.01 Hz	5.00Hz	×
P4.15	FDT1(freq. level)	0.00～Upper limit freq	0.01 Hz	10.00Hz	×
P4.16	FDT1 lag	0.00～50.00Hz	0.01 Hz	1.00Hz	○
P4.17	Analog output (AO1) gain	unit's place: Output freq.(0～upper limit freq.) 1: Output current(0～2 times motor rated current) 2: Output voltage(0～1.2 times inverter rated voltage) 3: Bus bar voltage 4: PID given 5: PID feedback 6: VI (0～10V) 7: CI(0～10V/4～20mA)	01	00	○

Func Code	Name	Range	Min Unit	Factory Default	Modify
P4.18	Analog	Analog output (AO1) gain	0.01	1.00	○
P4.19	Analog output (AO2) selection	unit's place: Output freq.(0～upper limit freq.) 1: Output current(0～2 times motor rated current) 2: Output voltage(0～1.2 times inverter rated voltage) 3: Bus bar voltage 4: PID given 5: PID feedback 6: Vi (0～10V) 7: CI(0～10V/4～20mA) ten's place: 0: 0～10V 1: 0～20mA 2: 4～20mA	01	00	○
P4.20	Analog output (AO2) gain	0.50～2.00	0.01	1.00	○
P4.21	DO output terminal	unit's place: 0: Output freq.(0～upper limit freq.) 1: Output current(0～2 times motor rated current) 2: Output voltage(0～1.2 times inverter rated voltage) 3: Bus bar voltage (0～800V) 4: PID given 5: PID feedback 6: VI (0～10V) 7: CI(0～10V/4～20mA)	1	0	○

Func Code	Name	Range	Min Unit	Factory Default	Modify
P4.22	DO max pulse output freq.	0.1K～20.0K (max 20KHz)	0.1KHz	10.0KHz	○
P4.23	Set counts given	F4.20～9999	1	0	○
P4.24	Specified counts given	0～F4.19	1	0	○
P4.25	Overload pre-alarm detection level	20%～200%	1	130%	○
P4.26	Overload pre-alarm delay time	0.0～20.0s	0.1s	5.0s	○
P5 Group: Protection function parameter					
P5.00	Motor overload protection mode selection	0：Stop outputting 1：Inaction	1	0	×
P5.01	Motor overload protection coefficient	20～120%	1	100%	×
P5.02	Overvoltage stall Selection	0：Prohibited 1：Allowed	1	1	×
P5.03	Overvoltage stall point	380V：120～150% 220V：110～130%	1%	140% 120%	○
P5.04	Auto current limit level	110%～200%	1%	150%	×
P5.05	Freq. drop rate during current limit	0.00～99.99Hz/s	0.01Hz/s	10.00Hz/s	○
P5.06	Auto current limit mode selection	0：Constant speed invalid 1：Constant speed valid 2：Overcurrent blocking output Note: Acc/Dec valid	1	1	×
P5.07	Restart setting after power failure	0：Inaction 1：Action	1	0	×
P5.08	Restart waiting time after power failure	0.0～10.0s	0.1s	0.5s	×
P5.09	Fault self-recovery times	0～10 0：Self-recovery invalid Note：Self-recovery invalid in overload or overheat	1	0	×

Func Code	Name	Range	Min Unit	Factory Default	Modify
P5.10	Self-recovery interval time	0.5～20.0s	0.1s	5.0s	×
P5.11	Input missing phase protection	0：Inaction 1：Action	1	0	○
P6 Group: Fault record function parameter					
P6.00	Previous failure record	Previous failure record	1	0	*
P6.01	Output frequency at the previous fault	Output frequency at the previous fault	0.01Hz	0	*
P6.02	Set frequency at the previous fault	Set frequency at the previous fault	0.01Hz	0	*
P6.03	Output current at the previous fault	Output current at the previous fault	0.1A	0	*
P6.04	Output voltage at the previous fault	Output voltage at the previous fault	1V	0	*
P6.05	DC bus voltage at the previous fault	DC bus voltage at the previous fault	1V	0	*
P6.06	Module temperature at the previous fault	Module temperature at the previous fault	10C	0	*
P6.07	Previous secondary fault record	Previous secondary fault record	1	0	*
P6.08	Previous third failure records	Previous third failure records	1	0	*
P6.09	Previous fourth failure record	Previous fourth failure record	1	0	*
P6.10	Previous fifth failure record	Previous fifth failure record	1	0	*
P6.11	Previous sixth failure record	Previous sixth failure record	1	0	*
P7 Group: Close loop running control function parameter					
P7.00	Close loop running control selection	0: Invalid 1: Valid	1	0	×
P7.01	Close loop given channel selection	0: P7.05 Digital given + panel ▲、▼Fine tuning 1: VI analog 0～10V voltage given 2: CI analog 0～10V given 3: Panel analog potentiometer given 4: RS485 communication given 5: Pulse input given 6: CI simulation4～20mACurrent setting	1	0	×
P7.02	Feedback channel selection	0: VI analog 0~10V input voltage 1: CI analog input (0～10V/0～20mA) 2: VI+CI 3: VI-CI	1	0	×

Func Code	Name	Range	Min Unit	Factory Default	Modify
P7.02	Feedback channel selection	4: Min { VI , CI } 5: Max { VI , CI } 6: CI analog input (4～20mA)	1	0	×
P7.03	Given channel filtering time constant	0.01～50.00s	0.01s	0.50s	○
P7.04	Feedback channel filtering time constant	0.01～50.00s	0.01s	0.50s	○
P7.05	Given value digital setting	0.001～20.000Mpa	0.001 Mpa	0.000M pa	×
P7.06	Close loop adjustment characteristics	0: Positive effect 1: Negative effect	1	0	○
P7.07	Feedback channel gain	0.01～10.00	0.01	1.00	○
P7.08	Lower pressure limit	0.001～P7.09	0.001	0.001	○
P7.09	Upper pressure limit	P7.08～P7.27	0.001	1.000	○
P7.10	PID Controller structure	0: Proportional control 1: Integral control 2: Proportional integral control 3: Proportional, integral and differential control	1	1	×
P7.11	Proportional gain KP	0.00～5.00	0.01	0.50	○
P7.12	Integral time constant	0.1～100.0s	0.1	10.0s	○
P7.13	Differential gain	0.0～5.0	0.1	0.0	×
P7.14	Sampling period	0.01～1.00s	0.01	0.10	○
P7.15	Tolerance limit	0.0～20.0%	0.1%	0.0%	○
P7.16	PID Feedback disconnected detection threshold	0.0～20.0%	0.1%	0.0%	○
P7.17	PID Feedback disconnected action selection	0～4	1	0	○
P7.18	PID Feedback disconnected operation delay time	0.01～5.00s	0.01s	1.00s	○

Func Code	Name	Range	Min Unit	Factory Default	Modify
P7.19	Pressure level.	0.001～P7.20	0.001 Mpa	0.001M pa	○
P7.20	Hibernation pressure level	P7.19～P7.27	01	00	○
P7.21	Hibernation level continuous time	0～250s	1s	10s	○
P7.22	Hibernation frequency	0.00～400.0Hz	0.01Hz	20.00Hz	○
P7.23	Hibernation frequency continuous time	0～250s	1s	10s	○
P7.24	Low alarm limit pressure	0.001～P7.25	0.001 Mpa	0.001M pa	○
P7.25	The alarm limit pressure	P7.24～P7.27	0.001 Mpa	0.001M pa	○
P7.26	Constant pressure water supply mode	0: Non-constant pressure water supply mode 1: One pump constant pressure water supply mode 2: Two pumps constant pressure water supply mode 3: Three pumps constant pressure water supply mode 4: Four pumps constant pressure water supply mode	1	0	×
P7.27	Remote pressure gauge range	0.001～20.000Mpa	0.001 Mpa	1.000M pa	○
P7.28	Multi pump operation mode	0: Fixed sequence switch 1: Timing of the rotation	1	0	○
P7.29	Rotation in timed intervals	0.5～100.0H	0.1H	5.0H	○
P7.30	Pump switching judgment time	0.1 ~ 1000.0s	0.1s	300.0s	○
P7.31	Electromagnetic switching delay time	0.1 ~ 10.0s	0.1s	0.5s	×
P7.32	PID Control of positive and negative role and feedback pressure error polarity	Unit's digit: 0: PID forward action; 1: PID reverse action. Ten's digit : 0: The feedback pressure is greater than the actual pressure;	1	00	×

Func Code	Name	Range	Min Unit	Factory Default	Modify
P7.32	PID Control of positive and negative role and feedback pressure error polarity	1: feedback pressure is less than actual pressure. Hundreds' digit: 0: wake up sleep pressure is actual pressure; 1: wake up sleep pressure is set pressure. Thousands' digit: 0: Press to view the monitoring parameters, and the B group monitoring parameters are viewed in order; 1: Press to view the monitoring parameters. The monitoring parameters of group B only view the three parameters of set pressure, output current and output frequency.	1	00	×
P7.33	Feedback error of pressure adjustment coefficient	0.001～20.000Mpa	0.001 Mpa	0.000Mpa	×
P7.34	Closed loop of preset frequency	Range: 0～Upper limit freq	0.00Hz	0.00Hz	×
P7.35	Closed loop of preset frequency holding time	Range: 0.0～200.0s	0.1s	0.0s	×
P8 Group PLC running parameter					
P8.00	PLC running mode selection	0000～1113 LED unit 's place: mode selection 0: Inaction 1: Stop after single cycle 2: Running at final freq after single cycle 3: Continuous cycle LED ten's place: restart mode selection 0: Restart from the first stage 1: Restart from the freq. of break stage 2: Restart from the running. of break stage LED hundred's place: parameter save mode selection	1	0000	×

Func Code	Name	Range	Min Unit	Factory Default	Modify
P8.00	PLC running mode selection	0: No save 1: Save LED thousand's place: running time unit 0: Second 1: minute	1	0000	×
P8.01	Stage 1 setting	000～621 LED unit 's place: freq setting 0: Multi-stage freq i (i = 1～7) 1: Freq. defined by P0.01 function code LED ten's place: direction selection 0: Forward 1: Reverse 2: Controlled by running command LED hundred's place: Acc/Dec time selection 0: Acc/Dec time 1 1: Acc/Dec time 2 2: Acc/Dec time 3 3: Acc/Dec time 4 4: Acc/Dec time 5 5: Acc/Dec time 6 6: Acc/Dec time 7	1	000	○
P8.02	Stage 1 running time	0.1～6000.0	0.1	10.0	○
P8.03	Stage 2 setting	000～621	1	000	○
P8.04	Stage 2 running time	0.1～6000.0	0.1	10.0	○
P8.05	Stage 3 setting	000～621	1	000	○
P8.06	Stage 3 running time	0.1～6000.0	0.1	10.0	○
P8.07	Stage 4 setting	000～621	1	000	○
P8.08	Stage 4 running time	0.1～6000.0	0.1	10.0	○
P8.09	Stage 5 setting	000～621	1	000	○
P8.10	Stage 5 running time	0.1～6000.0	0.1	10.0	○
P8.11	Stage 6 setting	000～621	1	000	○
P8.12	Stage 6 running time	0.1～6000.0	0.1	10.0	○

Func Code	Name	Range	Min Unit	Factory Default	Modify
P8.13	Stage 7 setting	000～621	1	000	○
P8.14	Stage 7 running time	0.1～6000.0	0.1	10.0	○
P9 Group Swing frequency function parameter					
P9.00	Swing freq. selection	0: Inaction 1: Action	1	0	×
P9.01	Swing freq. running mode	0000～11 LED unit's place: start mode 0: Auto start 1: Manual start by terminal LED ten's place: swing amplitude control 0: Variable swing amplitude 1: Fixed swing amplitude	1	00	×
P9.02	Preset swing freq.	0.00～500.00Hz	0.01Hz 0.1s	0.00Hz	○
P9.03	Preset swing freq. waiting time	0.0～3600.0s	0.1s	0.0s	○
P9.04	Swing amplitude	0.0～50.0%	0.1%	0.0%	○
P9.05	Kick freq.	0.0～50.0%	0.1%	0.0%	○
P9.06	Swing freq. cycle	0.1～999.9s	0.1s	10.0s	○
P9.07	delta wave ascent time	0.0～98.0%	0.1%	50.0%	○
P9.08	Terminal UP/DOWN and Fan control selection	unit's digit: 0: fan running when the inverter is running 1: The fan is running when power is on 2: The fan does not run at zero-frequency ten's digit: 0: Keep the frequency parameter setting after it stops working or the power is off. 1: Release the frequency parameter settings after it stops working or the power is off. hundred's digit: 0: The terminal run command is valid when the power is on 1: The terminal run command is invalid when power is on	1	0	○

Func Code	Name	Range	Min Unit	Factory Default	Modify
P9.09	Muti-function terminal filtering time	Range：0～4	1	1	○
P9.10	Braking unit use rate	0～100.0%	0.1%	30.0%	○
P9.11	Overpressure threshold value	0～780V	1V	780V	○
P9.12	Energy consumption braking bus bar voltage	0～780V	1V	640V Or 358V	○
P9.13	G/P type setting and single-phase motor type selection	Unit's digit: 0: G type 1:P type Ten's digit: reserved Hundred's digit: reserved Thousand's digit: Singlephase motor type: 0: ordinary three-phase asynchronous motor(220V) 1: single-phase asynchronous motor(removing capacitor) 2: Single-phase asynchronous motor(without removing the capacitor)	0000	0000	○
P9.14	User password	0000～9999	0000	0000	○
PA Group: Vector control parameter					
PA.00	Motor parameter Auto tuning function	0：Inaction 1：Static auto tuning	1	0	×
PA.01	Motor rated voltage	0～400V	1	depends on model type	×
PA.02	Motor rated current	0.01～500.00A	0.01A	depends on model type	×
PA.03	Motor rated frequency	1～500Hz	1Hz	depends on model type	×

Func Code	Name	Range	Min Unit	Factory Default	Modify
PA.04	Motor rated rotating speed	1～9999 r/min	1r/min	depends on model type	×
PA.05	Motor poles number	2～16	1	depends on model type	×
PA.06	Motor stator inductance	0.1～5000.0mH	0.1mH	depends on model type	×
PA.07	Motor rotor inductance	0.1～5000.0mH	0.1mH	depends on model type	×
PA.08	Motor stator and rotor mutual inductance	0.1～5000.0mH	0.1mH	depends on model type	×
PA.09	Motor stator resistance	0.001～50.000Ω	0.001Ω	depends on model type	×
PA.10	Motor rotor resistance	0.001～50.000Ω	0.001Ω	depends on model type	×
PA.11	Over current protection coefficient of torque current	0～15	1	15	×
PA.12	Proportion adjustment coefficient of speed deviation	50～120	1	85	×
PA.13	Integral adjustment coefficient F speed deviation	100～500	1	360	×
PA.14	Vector torque boost	100～150	1	100	×
PA.15	Reserved	0	0	0	×
PA.16	Reserved	1～5	1	4	×
PA.17	Reserved	100～150	1	150	×
PA.18	Reserved	150	1	150	×
PA.19	Reserved	0～2	1	0	×
PF Group: Factory function parameter					
PF.00 ～ PF.10	Reserved	---	---	---	---
B-Monitoring: function parameter					
b-00	Output freq	Present output freq	0.01Hz	----	*
b-01	Set freq.	Present set freq.	0.01Hz	----	*

Func Code	Name	Range	Min Unit	Factory Default	Modify
b-02	Output voltage	Effective value of present output voltage	1V	----	*
b-03	Output current	Effective value of present output current	0.1A	----	*
b-04	Bus bar voltage	Present DC bus bar voltage	1V	----	*
b-05	Module temperature	IGBT heat sink temperature	10C	----	*
b-06	Motor speed	Present motor speed	1r/min	----	*
b-07	Running time	One continuous running time	1H	----	*
b-08	Input/output terminal state	Input/output terminal state	----	----	*
b-09	Analog input VI	Analog input VI value	0.01V	----	*
b-10	Analog input CI	Analog input CI value	0.01V	----	*
b-11	External pulse input	External pulse width input value	1ms	----	*
b-12	Inverter rated current	Inverter rated current	0.1A	----	*
b-13	Inverter rated voltage	Inverter rated voltage	1V	----	*
b-14	Set pressure	Water supply control when the set pressure of the pipeline	0.001Mpa	----	*
b-15	Feedback pressure	Water supply control feedback pipeline pressure	0.001Mpa	----	*
b-16	No unit display	No unit display	1	----	*

Note：
Monitoring parameter input/output terminal state displayed as follow:

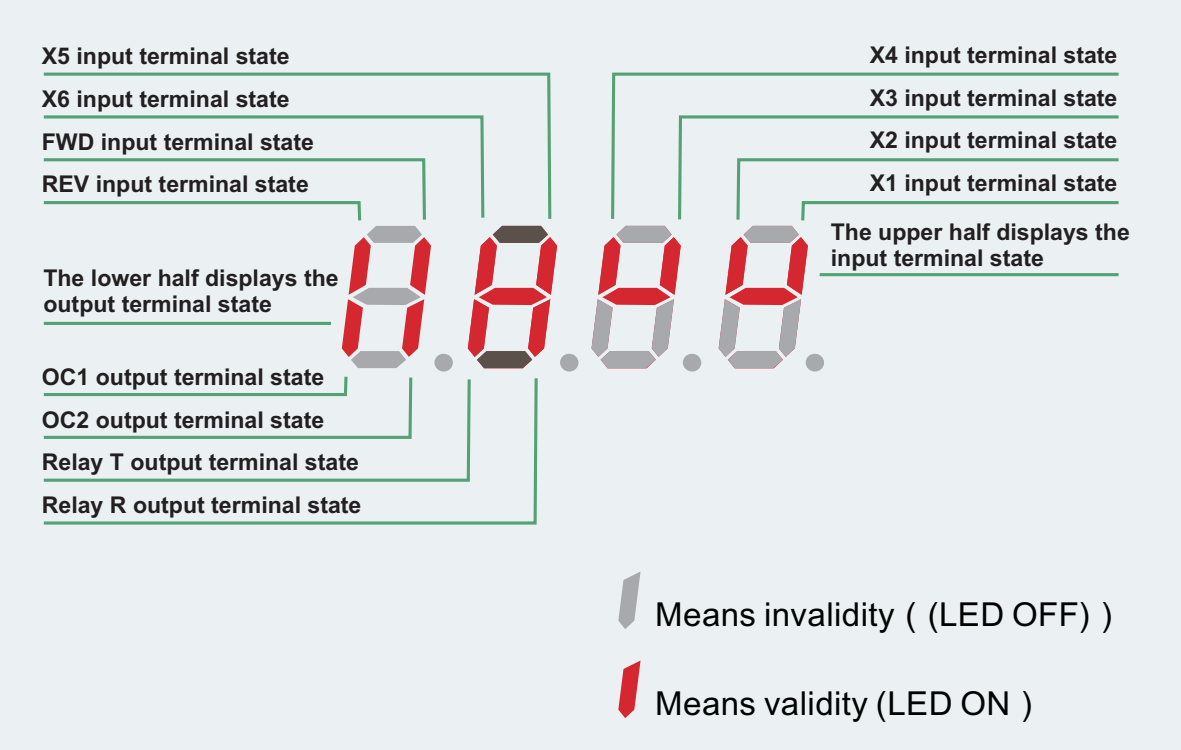
X5 input terminal state
X6 input terminal state
FWD input terminal state
REV input terminal state
The lower half displays the output terminal state
OC1 output terminal state
OC2 output terminal state
Relay T output terminal state
Relay R output terminal state
X4 input terminal state
X3 input terminal state
X2 input terminal state
X1 input terminal state
The upper half displays the input terminal state
Means invalidity ((LED OFF))
Means validity (LED ON)

6.1 Basic running function parameter (P0 Group)

Func Code	Name	Range	Min Unit	Factory Default	Modify
P0.00	Control mode selection	0：V/F Control 1：Sensorless vector control	1	0	○

0：V/F Control

1：Sensorless vector control

Func Code	Name	Range	Min Unit	Factory Default	Modify
P0.01	Control mode selection	0～8	1	0	○

0: Analog potentiometer given on control panel;

1: Control panel▲, ▼ key given. Use ▲, ▼ key to set running frequency;

2: Control panel frequency digital setting. Use control panel to amend P0.02 parameter (initial set freq.) to change set freq;

3: Terminal UP/DOWN digital setting. Use terminal UP/DOWN to amend P0.02 parameter (initial set freq.) to change set freq;

4: Serial port digital setting. (Remote control mode) Set P0.02 parameter (initial set freq.) via serial port;

5: VI analog given (VI-GND). Set freq. controlled by VI terminal analog input voltage. The voltage range is DC 0~10V. The corresponding relationship between set freq. and VI input voltage defined by function code P1.00~P1.05;

6: CI analog given (CI-GND). Set freq. controlled by CI terminal analog input voltage/current. The input voltage range is DC 0~10V (JP3 jumper V), and the current range is DC 4~20mA (JP3 jumper A). The corresponding relationship between set freq. and CI input defined by function code P.1.06-P1.10

7: Pulse terminal given. Set freq. controlled by terminal pulse (The pulse signal only can be input through X6 terminal.). The corresponding relationship between set freq. and input pulse defined by function code P1.11-P1.15.

8: Combination given (refer to function parameter P3.00).

Func Code	Name	Range	Min Unit	Factory Default	Modify
P0.02	Running frequency set	P0.20lower limit freq.～P0.19upper limit freq.	0.01HZ	50.00HZ	○

When Freq control channel selection setting (P0.01=1, 2, 3, 4), P0.02 parameter defines the initial digital set frequency.

Func Code	Name	Range	Min Unit	Factory Default	Modify
P0.03	Running command mode selection	0～2	1	0	○

0: Use control panel key RUN, STOP/RESET, JOG to operate the inverter.

1: Terminal control mode. Use control terminal FWD, REV, X1~X6, etc. to operate the inverter.

2：Serial port control mode. Operate the inverter via serial port RS485 in remote control mode.

Note:
Running command mode can be switched by changing P0.03 parameter in stopping or running state. Please use this function in caution.

Func Code	Name	Range	Min Unit	Factory Default	Modify
P0.04	Running direction setting	00~11	1	0	○

Running direction setting	
LED unit's digit	0：Running forward 1：Running reverse
LED ten's digit	0：Reverse allowed 1：Reverse prohibited

Func Code	Name	Range	Min Unit	Factory Default	Modify
P0.05	FWD/REV dead time	0.0～120.0s	0.1s	0.1s	○

In switching process between forward and reverse running, the transition time as Fig.6-1 t1 is defined as FWD/REV dead time. The inverter outputs 0 freq. during transition time.

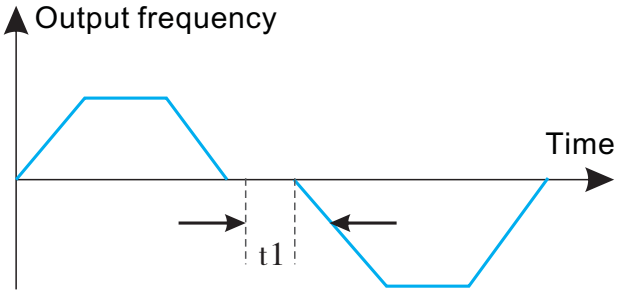

Fig.6-1 FWD/REV dead time

Func Code	Name	Range	Min Unit	Factory Default	Modify
P0.06	Max output freq.	50.00Hz～500.00Hz	0.01HZ	50.00HZ	×
P0.07	Basic running freq	1.00Hz～500.00Hz	0.01HZ	50.00HZ	×
P0.08	Max output voltage	1～480V	1V	inverter rated voltage	×

Max. output freq. is inverter highest output frequency allowed shown as Fig. 6-2 Fax.

Basic running freq. is the lowest output frequency corresponding to the highest output voltage of inverter. Generally, it is motor rated frequency shown as Fig.6-2 FB.

Max. output voltage is the output voltage corresponding to inverter outputs basic running frequency. Generally, it is motor rated voltage shown as Fig.6-2 Amax.

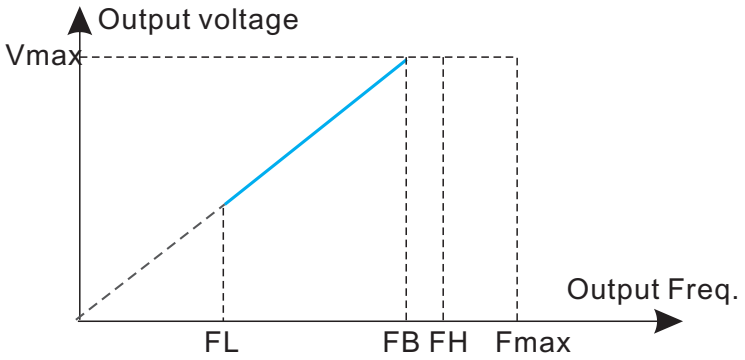

Fig.6-2 Fmax/FB/Vmax0V

Func Code	Name	Range	Min Unit	Factory Default	Modify
P0.09	Torque boost	0.0%～30.0%	0.1%	2.0%	×

In order to compensate the low frequency torque, boost the output voltage in the low frequency zone shown as Fig.6-3.

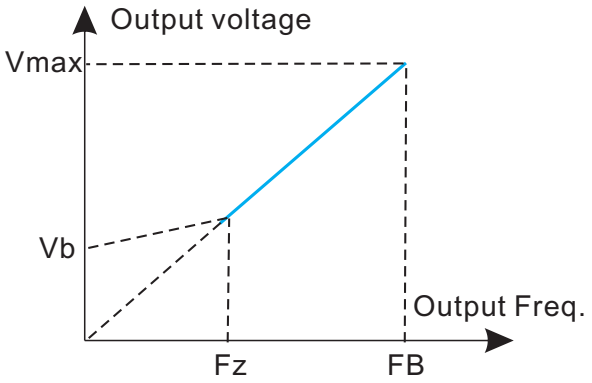

Vb:manual torque boost voltage
Fz:torque boost cutoff frequency

(A)Constant torque curve torque boost

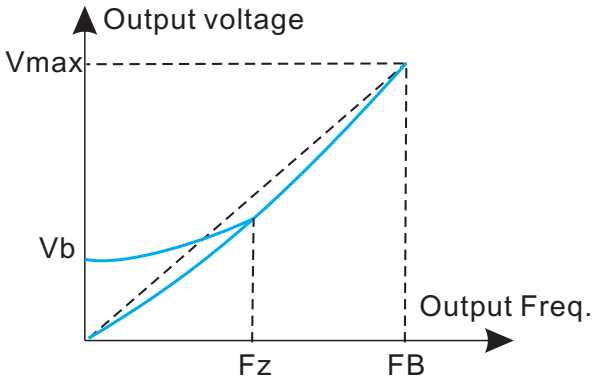

Vmax: highest output voltage
Fz: basic running frequency

(B)Square torque curve torque boost

Fig.6-3 Torque boost

Func Code	Name	Range	Min Unit	Factory Default	Modify
P0.10	Torque boost cut-off freq.	0.00Hz～Basic running freq.P0.07	0.00	50.00Hz	○

This function defines the cutoff freq. in manual torque boost shown as Fig.6-3 Fz. This parameter is adaptable to any V/F mode defined by P0.22.

Func Code	Name	Range	Min Unit	Factory Default	Modify
P0.11	Torque boost mode	0～1	1	0	○

0: Manual boost. In manual boost mode, torque boost voltage is defined by P0.09 parameter, which is fixed. But the motor is easy to reach magnetic saturation in light-load.

1: Auto. boost. In this mode, torque boost voltage changes according to motor stator current changing.The higher of stator current, the bigger of boost voltage reaches.

$$\text{Boost voltage} = \frac{0.09}{100} \times \text{Motor rated voltage} \times \frac{\text{Inverter output current}}{2 \times \text{Inverter rated current}}$$

Func Code	Name	Range	Min Unit	Factory Default	Modify
P0.12	Carrier freq	1.0K～14.0K	0.1K	8.0K	×

The carrier freq. mainly affects the noise of motor and heat loss. The relationship between carrier freq. and motor noise, leakage current, and interference shown as follow.

Carrier Freq.	Decrease	Increase
Noise	↑	↓
Leakage Current	↓	↑
Interference	↓	↑

Note:

- In order to get better control characteristic, the ratio of carrier frequency to inverter highest running frequency is suggested beyond 36.
- Difference may occur in current value display, when carrier freq. is low.

Func Code	Name	Range	Min Unit	Factory Default	Modify
P0.13	Acc/Dec mode selection	0～1	1	0	×

0: Linear Acc/Dec. Output frequency increases or decreases as constant slope shown as Fig.6-4.

1: S curve Acc/Dec. Output frequency increases or decreases as s curve shown as Fig.6-5.

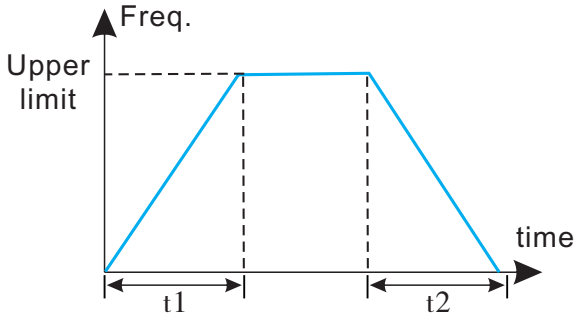

Fig.6-4 Linear Acc/Dec

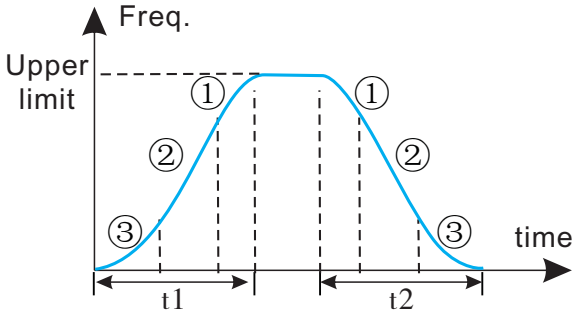

Fig.6-5 S curve Acc/Dec

Func Code	Name	Range	Min Unit	Factory Default	Modify
P0.14	Time of S curve start stage	10.0%～50.0%（Acc/Dec time） P0.14＋P0.15《90%	0.1%	20.0%	○
P0.15	Time of S curve ascent stage	10.0%～80.0%（Acc/Dec time） P0.14＋P0.15《90%	0.1%	60.0%	○

P0.14, P0.15 is effective only in s curve Acc/Dec mode(P0.13=1).

S curve start stage time shown as Fig.6-5(3). The curve slope is increasing from 0.

S curve ascent stage time shown as Fig.6-5(2). The curve slope keeps constant.

S curve end stage time shown as Fig.6-5(1). The curve slope is decreasing to 0.

Note:

- S curve Acc/Dec mode is suitable for the starting and stopping process of conveying load such as elevator and belt conveyor, etc.

Func Code	Name	Range	Min Unit	Factory Default	Modify
P0.16	Acc/Dec time unit	0～1	0	0	×

0: Second

1: Minute

Note:

- This function is effective for all Acc/Dec process except for JOG running mode.
- Please try to select second as time unit.

Func Code	Name	Range	Min Unit	Factory Default	Modify
P0.17	Acc time 1	0.1～6000.0	0.1	20.0	○
P0.18	Dec time 1	0.1～6000.0	0.1	20.0	○

Acc time is the time of inverter output frequency increasing from 0 to upper limit freq. shown as in Fig.6-6 t1.

Dec time is the time of inverter output frequency decreasing from upper limit freq. to 0 shown as Fig.6-6 t2.

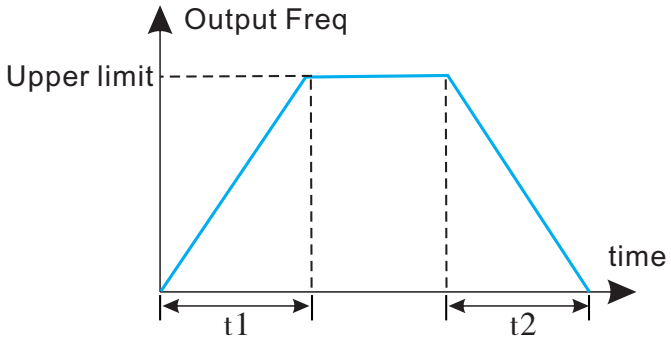

Fig.6-6 Acc/Dec time

- **Note:**
- The inverter has 7 Acc/Dec time. Herein just 1 Acc/Dec is defined. The other 2~7 Acc/Dec time are defined by P3.14~P3.25 function parameter.
- It can select time unit by P0.09 for all 1~7 Acc/Dec time. The factory default setting unit is second.

Func Code	Name	Range	Min Unit	Factory Default	Modify
P0.19	Upper limit freq.	Lower limit freq. ～Max output freq.P0.06	0.01Hz	50.00Hz	×
P0.20	Lower limit freq.	0.00Hz～Upper limit freq.	0.01Hz	0.00Hz	×
P0.21	Lower limit freq. Running mode	0～1	1	0	×

P0.19,P0.20 parameter defines the upper and lower limit of output frequency. FH,FL is upper limit frequency and lower limit frequency respectively shown as Fig.6-2.

When actual setting frequency is lower than lower limit freq., the inverter output frequency will decrease in Dec time which has been set. As it reaches the lower limit frequency, if P0.21=0 , the inverter will run at lower limit frequency. If P0.21=1, the inverter will keep decreasing the output frequency to 0.

Func Code	Name	Range	Min Unit	Factory Default	Modify
P0.22	V/F curve setting	0～4	1	0	×
P0.23	V/F Freq.valueP3	P0.25～P0.07 Basic running freq.	0.01Hz	0.00Hz	×
P0.24	V/F Volt.valueV3	P0.26～100.0%	0.1%	0.0%	×
P0.25	V/F Freq.valueP2	P0.27～P0.23	0.01Hz	0.00Hz	×
P0.26	V/F Volt.valueV2	P0.28～P0.24	0.1%	0.0%	×
P0.27	V/F Freq.valueP1	0.00～P0.25	0.01Hz	0.00Hz	×
P0.28	V/F Volt.valueV1	0～P0.26	0.1%	0.0%	×

These function parameter defines flexible V/F setting mode of inverter. User can select 4 fixed curves and 1 customized curve through P0.22 parameter so as to meet different load requirements.

P0.22=0, Constant torque V//F curve shown as Fig.6-7 curve 0

P0.22=1, 1.2 times the power reduced torque V/F curve shown as Fig.6-7 curve 1

P0.22=2, 1.7 times the power reduced torque V/F curve shown as Fig.6-7 curve 2

P0.22=3, 2.0 times the power reduced torque V/F curve shown as Fig.6-7 curve 3

When inverter drives reduced torque load such as fans, and pumps, user can select 1/2/3 V/F curve running mode according to load characteristic for energy saving.

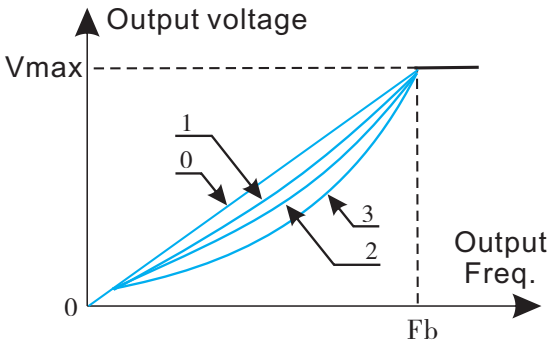

Vmax：max output voltage
Fb basic running Freq.

Fig 6-7 V/Curve

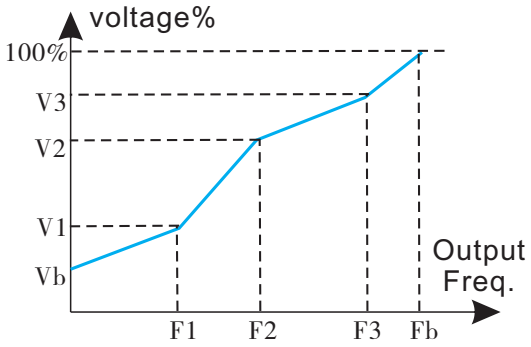

V1~V3: Multi-segment V / F 1st to 3rd segment voltage percentage;
F1~F3: Multi-segment V / F 1st to 3rd frequency points

Fig 6-8 customized V/Fcurve

P0.22=4, Customized V/F curve shown as Fig. 6-8.

User can define V/F curve through revising (V1,F1),(V2,F2),(V3,F3) so as to meet special load requirements. Torque boost is available for customized curve.

Vb = Torque boost（P0.09）× V1

6.2 Frequency Setting Function Parameter (P1 Group)

Func Code	Name	Range	Min Unit	Factory Default	Modify
P1.00	Analog filtering time constant	0.01～30.00s	0.01s	0.20s	○

When adopts frequency external analog channel setting mode, time constant is inverter filtering sampling value time. When long distance wiring or serious interference cause setting frequency unstable, increase this time constant to avoid the disoperation . The longer filtering time, anti-interference ability will be stronger. But the response will be slower. The shorter filtering time it has, the quicker response, but weaker anti-interference ability.

Func Code	Name	Range	Min Unit	Factory Default	Modify
P1.01	VI channel gains	0.01～9.99	0.01	1.00	○
P1.02	VI min given	0.00～P1.04	0.01Hz	0.00V	○
P1.03	Corresponding freq. to VI min given	0.00～Upper limit freq.	0.01Hz	0.00Hz	○
P1.04	VI max given	P1.04～10.00V	0.01V	10.00V	○
P1.05	Corresponding freq.	0.00～Upper limit freq.	0.01Hz	50.00Hz	○
P1.06	CI channel gains	0.01～9.99	0.01	1.00	○
P1.07	CI min given	0.00～P1.09	0.01V	0.00V	○
P1.08	Corresponding freq. to CI min given	0.00～Upper limit freq	0.01Hz	0.00Hz	○
P1.09	CI max given	P1.07～10.00V	0.01V	10.00V	○
P1.10	Corresponding freq.to CI max given	0.00～Upper limit freq	0.01Hz	50.00Hz	○
P1.11	Max input pulse freq	0.1～20.0K	0.1K	10.0K	○
P1.12	Pulse min given	0.0～P1.14(Pulse max given)	0.1K	0.0K	○
P1.13	Corresponding freq.to pulse min given	0.00～Upper limit freq	0.01Hz	0.00Hz	○
P1.14	Pulse max given	P1.12(Pulse min given)～ P1.11(Max input pulse freq.)	0.1K	0.1K	○
P1.15	Corresponding freq.to pulse max given	0.00～Upper limit freq	0.01Hz	50.00Hz	○

When selects VI, CI or pulse frequency input as open loop frequency setting channel, the relationship between frequency given and setting frequency as follow:

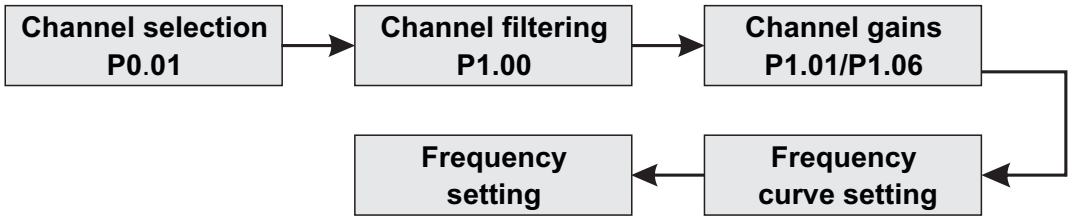

The relationship between VI and setting frequency is as follow.

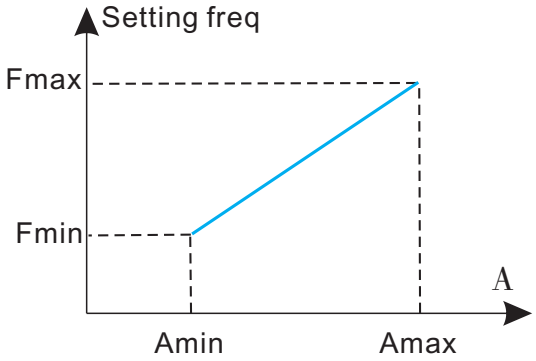

A : VI given Amin: Min
Amax: Max

(1) Positive effect

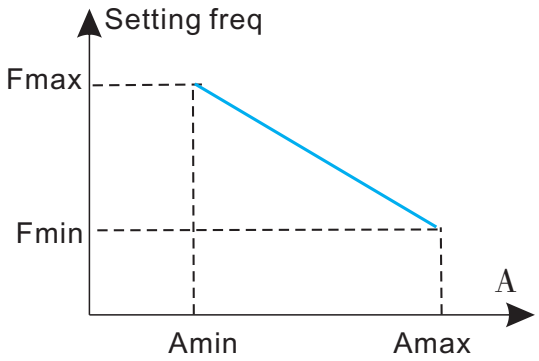

Pmin : corresponding Freq to Min given
Pmax : corresponding Freq to Max given

(2) Negative effect

The relationship between CI and setting frequency as follow.

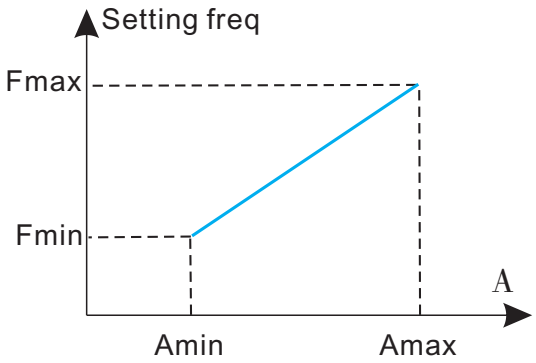

A : CI given Amin: Min
Amax: Max

(1) Positive effect

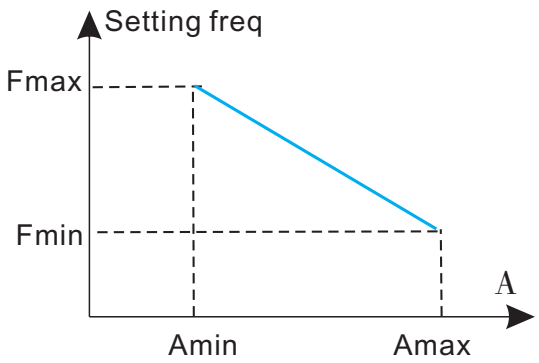

Pmin : corresponding Freq to Min given
Pmax : corresponding Freq to Max given

(2) Negative effect

The relationship between input PULSE frequency and setting frequency is as follow.

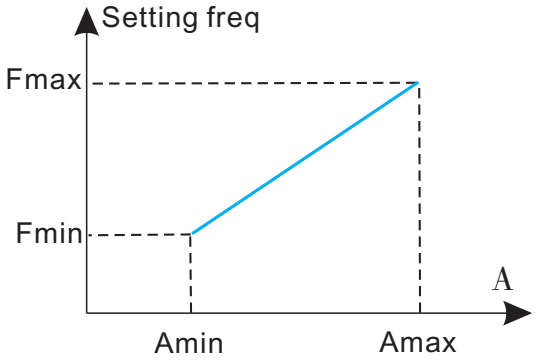

A : PLUSE given Amin: Min
Amax: Max

(1) Positive effect

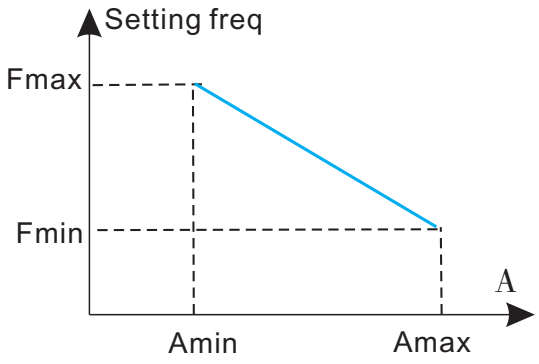

Pmin : corresponding Freq to Min given
Pmax : corresponding Freq to Max given

(2) Negative effect

6.3 Start/Brake Function Parameter (P2 Group)

Func Code	Name	Range	Min Unit	Factory Default	Modify
P2.00	Start running mode	0～2	1	0	×

0 : The inverter starts from start freq.(P2.01) and keeps running at start freq. for duration defined as start freq. running duration (P2.02);

1 : The inverter brakes first by DC brake current (P2.03) and brake time (P2.04) ,and then starts from start frequency;

2 : The inverter restarts again after speed tracking, which is available for power restored after momentary power failure and restart after fault reset.

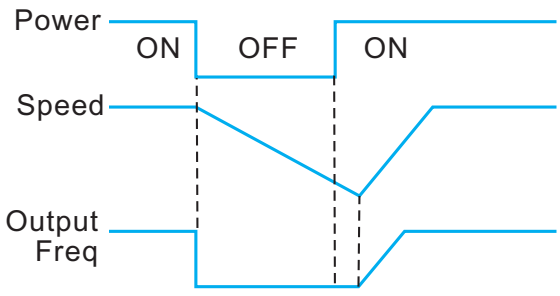

Fig.6-9 Speed tracking restart

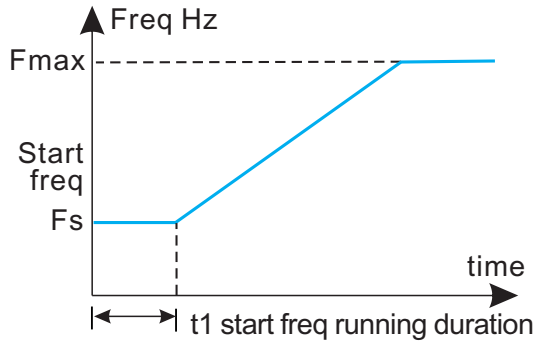

Fig.6-10 Start freq. and running duration

Note:

- Start running mode 0: It is suggested to use mode 0 in general applications and when to drive synchronous motor.
- Start running mode 1: It is suitable to small inertia loads which have FWD or REV running when there is no motor driven. But not suitable to big inertia loads.
- Start running mode 2: It is suitable to restart after momentary power failure and restart during motor free stopping.

Func Code	Name	Range	Min Unit	Factory Default	Modify
P2.01	Start freq.	0.40～20.00Hz	0.01Hz	0.50Hz	○
P2.02	Start freq. running duration	0.0～30.0s	0.1s	0.0s	○

Start freq. is the initial frequency when inverter starts shown as Fig.6-10 Fs. Start freq. running duration is the duration time for inverter keeping running at start frequency shown as Fig.6-10.

Note:

- Start frequency is not restricted by lower limit freq.

Func Code	Name	Range	Min Unit	Factory Default	Modify
P2.03	DC brake current as start	0～15%	1%	0%	○
P2.04	DC brake time as start	0.0～60.0s	0.1s	0.0s	○

DC brake current is a percentage relative to the inverter rated current. There is no DC brake as DC brake time is 0.0s.

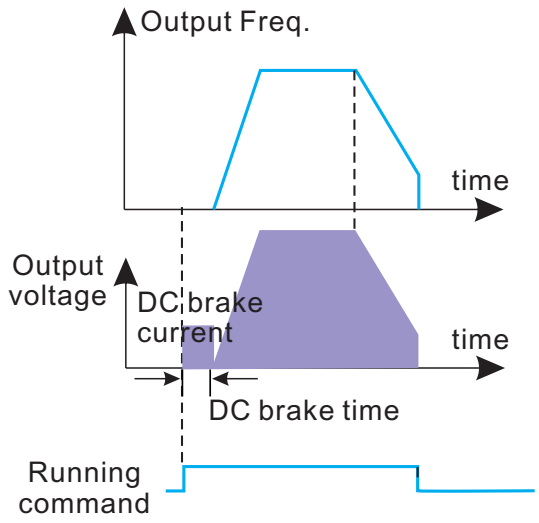

Fig.6-11 start mode 1

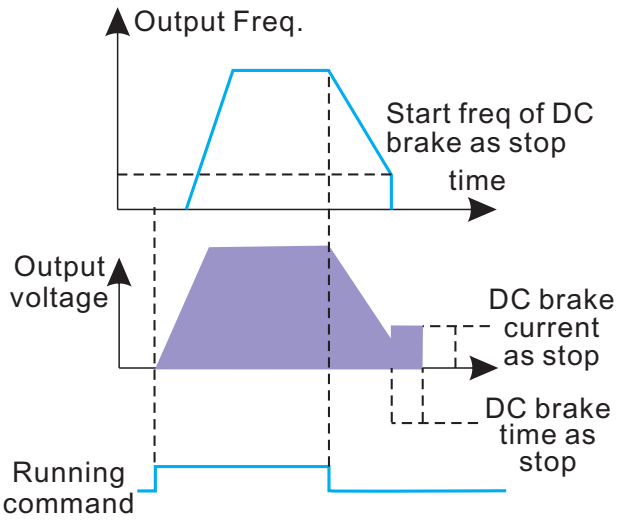

Fig.6-12 DC stop and DC brake

Func Code	Name	Range	Min Unit	Factory Default	Modify
P2.05	Stop mode	0～2	1	0	×

0: After receiving stop command, the inverter decreases the output frequency to 0 in set Dec time.

1: After receiving stop command, the inverter stops output immediately, and the load goes to stop by mechanical inertia. This is called as coast stop.

2: After receiving stop command, the inverter decreases the output frequency in Dec time , when it reaches the start frequency of DC brake, the inverter begins to DC brake.

Func Code	Name	Range	Min Unit	Factory Default	Modify
P2.06	Start freq. of DC brake as stop	0.0～15.00Hz	0.0Hz	3.00Hz	○
P2.07	DC brake time as stop	0.0～60.0s	0.1s	0.0s	○
P2.08	DC brake current as stop	0～15%	1%	0%	○

DC brake current as stop is a percentage relative to the inverter rated current. There is no DC brake when DC brake time is 0.0s.

6.4 Auxiliary Running Parameter ((P3 Group)

Func Code	Name	Range	Min Unit	Factory Default	Modify
P3.00	Freq. control channel combination	0～20	1	0	×

As P0.01(frequency control channel selection)=8, It can set frequency control channel combination through the above parameter (P3.00).

0：VI + CI;
1：VI - CI;
2：external pulse given +V1+ control panel▲、▼key given;
3：external pulse given +V1+ control panel▲、▼key given;
4：external pulse given + CI;
5：external pulse given - CI;
6：RS485 given + VI + control panel ▲、▼key given ;
7：RS485 given - VI - control panel▲、▼key given;
8：RS485given + CI+ control panel ▲、▼key given;
9：RS485given - CI-control panel ▲、▼key given;
10：RS485given + CI + external pulse given;
11：RS485given - CI - external pulse given;
12：RS485 given + VI + external pulse given;
13：RS485 given - VI - external pulse given;
14：VI + CI + control panel▲、▼key given + digital given P0.02;
15：VI + CI - control panel▲、▼key given + digital given P0.02;
16：MAX（VI，CI）;
17：MIN（VI，CI）;
18：MAX（VI，CI，PLUSE）;
19：MIN（VI，CI，PLUSE）;
20：VI，CI availability except，VI prior;
21: VI+Terminal UP/ DOWN;
22: CI+Terminal UP/ DOWN;
23: RS485 setting + panel analog potentiometer fine tuning;
24: RS485 setting-panel analog potentiometer;
25: RS485 setting + VCI;
26: RS485 setting-VCI;
27: RS485 setting + CCI;
28: RS485 setting-CCI;
29: VI + analog potentiometer fine tuning;
30: Fine adjustment of CI + analog potentiometer fine tuning;
31: VI + analog potentiometer;
32: VI-analog potentiometer;
33: CI + analog potentiometer;
34: CI-analog potentiometer;
35: RS485 setting + UPDOWN terminal fine tuning.

Func Code	Name	Range	Min Unit	Factory Default	Modify
P3.01	Parameter initialization setting	LED unit's digit 0~2 LED ten's digit 0~2	1	0	×

0: After receiving stop command, the inverter decreases the output frequency to 0 in set Dec time.

1: After receiving stop command, the inverter stops output immediately, and the load goes to stop by mechanical inertia. This is called as coast stop.

2: After receiving stop command, the inverter decreases the output frequency in Dec time , when it reaches the start frequency of DC brake, the inverter begins to DC brake.

Parameter initialization setting	
LED unit's digit	0 : All parameters are allowed to be revised 1 : All parameters are not allowed to be revised except this parameter itself 2 : All parameters are not allowed to be revised except P0.02 parameter and this parameter itself.
LED ten's digit	0 : inaction 1 : Factory default reset 2 : Clear history fault record

Note:

- ✦ The factory default setting of this function code parameter is 0, that is all the function code parameter are allowed to be revised。
- ✦ After factory default reset, each place of this function code recovers to 0 automatically.

Func Code	Name	Range	Min Unit	Factory Default	Modify
P3.02	Parameter copy	0～2	1	0	×

0 : inaction;

1 : Parameter upload: upload function code parameter to remote control;

2 : Parameters download: download function code parameter from remote control.

Note: This feature is only available for the remote control. Parameters are automatically restored to 0 after executing upload or download.

Func Code	Name	Range	Min Unit	Factory Default	Modify
P3.03	Auto energy save running	0～1	1	0	×

0 : inaction

1 : action

When motor is running with light load or no-load, the inverter will detect the load current and adjust output voltage appropriately so as to save energy. This function is mainly used in application with stable load and running speed.

Func Code	Name	Range	Min Unit	Factory Default	Modify
P3.04	AVR function	0～20	1	0	×

0：inaction
1：always action
2：inaction only in deceleration
This is auto voltage regulation function. When inverter input voltage is fluctuating, use this function to keep inverter output voltage stable.
When inverter is decelerating to stop, if AVR function is invalid, the Dec. Time is going to be shorter. But it will output a higher running current. If AVR is effective, the motor will be decelerating stably with lower running current, but the Dec. Time becomes longer.

Func Code	Name	Range	Min Unit	Factory Default	Modify
P3.05	Slip freq. compensation	0～150%	1%	0%	×

This function can regulate the output frequency appropriately according to the load, which can dynamically compensate the slip frequency of asynchronous motor so as to control the speed at a stable value. If use this function in conjunction with auto. torque boost function, It can achieve better low speed torque characteristic, which is shown as Fig.6-13.

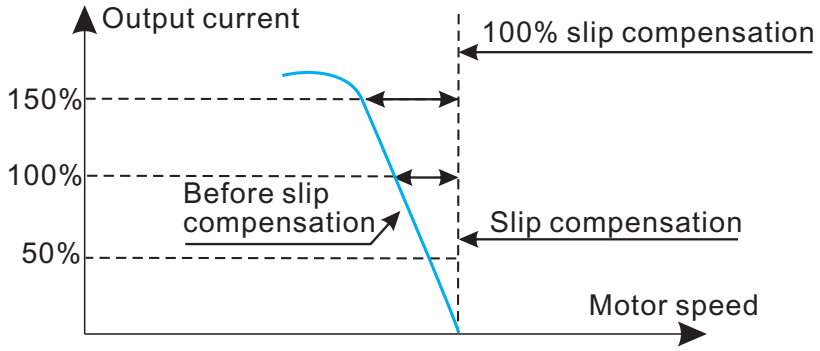

Fig.6-13 slip freq. compensation

Func Code	Name	Range	Min Unit	Factory Default	Modify
P3.06	JOG running freq.	0.10～50.00Hz	0.01Hz	5.00Hz	○
P3.07	JOG Acc time	0.1～60.0s	0.1s	20.0s	○
P3.08	JOG Dec time	0.1～60.0s	0.1s	20.0s	○

JOG frequency has the highest priority. In any stage, as long as there is a JOG command input, the inverter will switch to JOG frequency running by JOG Acc/Dec time immediately, which is shown as Fig.6-14

JOG Acc time is the time for inverter accelerating from 0 to upper limit freq.

JOG Dec time is the time for inverter decelerating from upper limit freq. to 0.

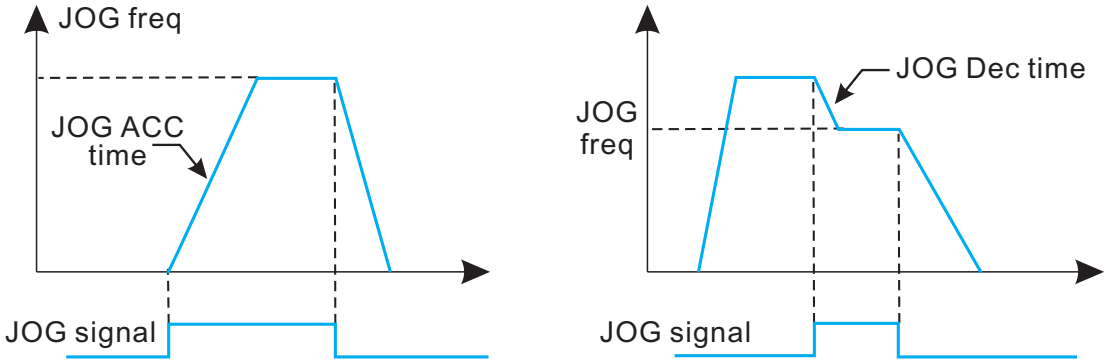

Fig.6-14 JOG running

Note:

- ✦ JOG running is available in panel control mode, terminal and serial port control mode.
- ✦ After JOG running command is canceled, the inverter will decelerate by Dec time.

Func Code	Name	Range	Min Unit	Factory Default	Modify
P3.09	Communication configuration	000～155	1	005	×

User can configure the baud rate, data format and communication mode by setting P3.09.

Communication configuration	
LED unit's digit (baud rate)	0：1200BPS 1：2400BPS 2：4800BPS 3：9600BPS 4：19200BPS 5：38400BPS
LED ten's digit (data format)	0：1 - 7 - 2 Format, without check；1-initial place, 7-data place, 2-stop place, without check; 1：1 - 7 - 1 Format, odd parity check；1-initial place, 7-data place, 1-stop place, odd parity check; 2：1 - 7 - 1 Format, even parity check；1-initial place, 7-data place, 1-stop place, even parity check;

Communication configuration	
LED ten's digit (data format)	3 : 1 - 8 - 2 Format, without check ; 1-initial place, 8-data place, 2-stop place, without check ; 4 : 1 - 8 - 1 Format, odd parity check ; 1-initial place, 8-data place, 1-stop place, odd parity check ; 5 : 1 - 8 - 1 Format, even parity check ; 1-initial place, 8-data place, 1-stop place, even parity check ; 6 : 1 - 8 - 1 Format, even parity check ; 1-initial place, 8-data place, 1-stop place, without check ;
LED hundred's digit (communicatio n mode)	0: MODBUS , ASCII Mode: MODBUS communication protocol, ASCII data transmission ; 1: MODBUS , RTU Mode: MODBUS communication protocol, RTU data transmission.

Func Code	Name	Range	Min Unit	Factory Default	Modify
P3.10	Local address	0～248	1	1	×

This function is used to mark the address of inverter itself in serial port communication mode.

0 Broadcast address. When the inverter works as a slave, if it receives address command as 0, it means the inverter is receiving broadcast command and unnecessary to respond the host.

248 Host address. When the inverter works as a host, set P3.10=248, the host inverter is able to send broadcast command to other slave inverters so as to achieve multi-machine interaction.

Func Code	Name	Range	Min Unit	Factory Default	Modify
P3.11	Communication overtime detection time	0.0～1000.0S	0.1s	0.0s	×

When serial port communication is failed, if the duration exceeds the set value of this function, the inverter will conclude that there is a communication failure.

As set value is 0, the inverter will not detect the serial port communication signal, that this function is invalid.

Func Code	Name	Range	Min Unit	Factory Default	Modify
P3.12	Local response delay	0～1000ms	1s	5ms	×

Local response delay is the time from serial port receiving the command from the upper computer and executing the command to responding the upper computer.

Func Code	Name	Range	Min Unit	Factory Default	Modify
P3.13	Multi-running proportion	0.01～1.00	0.01	1.00	×

This function code is used to set the scale factor of inverter received frequency set command through serial port. The actual inverter running frequency is equal to this scale factor multiplied by received frequency set command through serial port.

In multi-machine interaction running mode, it can use this parameter to set the scale of multi-inverter running frequency. That is different running freq.

Func Code	Name	Range	Min Unit	Factory Default	Modify
P3.14	Acc time2	0.1～6000.0	0.1	20.0	○
P3.15	Dec time2	0.1～6000.0	0.1	20.0	○
P3.16	Acc time3	0.1～6000.0	0.1	20.0	○
P3.17	Dec time3	0.1～6000.0	0.1	20.0	○
P3.18	Acc time4	0.1～6000.0	0.1	20.0	○
P3.19	Dec time4	0.1～6000.0	0.1	20.0	○
P3.20	Acc time5	0.1～6000.0	0.1	20.0	○
P3.21	Dec time5	0.1～6000.0	0.1	20.0	○
P3.22	Acc time6	0.1～6000.0	0.1	20.0	○
P3.23	Dec time6	0.1～6000.0	0.1	20.0	○
P3.24	Acc time7	0.1～6000.0	0.1	20.0	○
P3.25	Dec time7	0.1～6000.0	0.1	20.0	○

This function can define seven kinds of Acc/Dec time. It can select 1~7 kind of Acc/Dec time during running process by different combination of control terminal (Please refer to P4.00~P4.05).

Func Code	Name	Range	Min Unit	Factory Default	Modify
P3.26	Multi-stage freq.1	Multi-stage freq.1	0.01Hz	5.00Hz	○
P3.27	Multi-stage freq.2	Multi-stage freq.2	0.01Hz	10.00Hz	○
P3.28	Multi-stage freq.3	Multi-stage freq.3	0.01Hz	20.00Hz	○

Func Code	Name	Range	Min Unit	Factory Default	Modify
P3.29	Multi-stage freq.4	Multi-stage freq.4	0.01Hz	30.00Hz	○
P3.30	Multi-stage freq.5	Multi-stage freq.5	0.01Hz	40.00Hz	○
P3.31	Multi-stage freq.6	Multi-stage freq.6	0.01Hz	45.00Hz	○
P3.32	Multi-stage freq.7	Multi-stage freq.7	0.01Hz	50.00Hz	○

These setting frequency can be used in multi-stage speed running mode and PLC simple running mode (please refer to P.00~P4.05 and P8 group).

Func Code	Name	Range	Min Unit	Factory Default	Modify
P3.33	Jump freq.1	0.00～500.00Hz	0.01Hz	0.00Hz	×
P3.34	Jump freq.1range	0.00～30.00Hz	0.01Hz	0.00Hz	×
P3.35	Jump freq.2	0.00～500.00Hz	0.01Hz	0.00Hz	×
P3.36	Jump freq.2range	0.00～30.00Hz	0.01Hz	0.00Hz	×

This function is used for the inverter to avoid the resonance frequency of mechanical load.

The inverter setting frequency is able to do jump running near some frequency point shown as Fig.6-14. It can set 3 jump ranges at most.

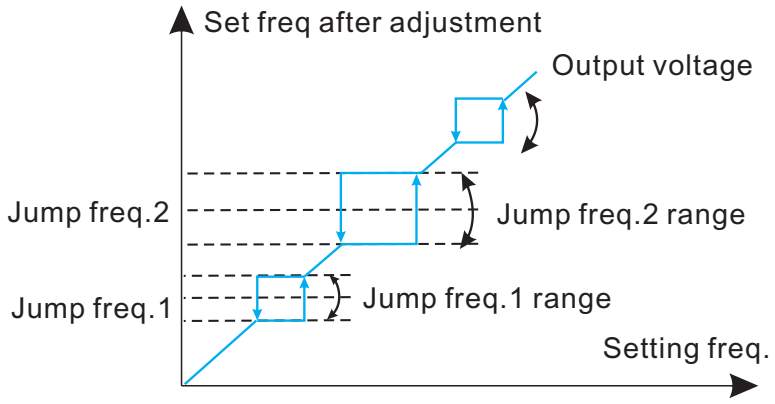

Fig.6-15 Jump frequency and range

Func Code	Name	Range	Min Unit	Factory Default	Modify
P3.37	Reserved	0000～9999	1	0000	×
P3.38	Zero frequency DC braking voltage	0.0%～15.0%	0.1%	0.0%	×

DC brake at 0 freq means inverter output DC voltage to brake motor while freq is 0. Users can adjust P3.38 to get larger braking force, but the current will be larger.

Func Code	Name	Range	Min Unit	Factory Default	Modify
P3.39	Set running time	0～65.535K hour	0.001K	0.000K	○
P3.40	Total running	0～65.535K hour	0.001K	0.000K	○

As total running time reaches set running time, the inverter will output index signal (refer to P4.08~P4.09).

P3.40 function code defines the total running time of inverter from factory delivery to present.

Func Code	Name	Range	Min Unit	Factory Default	Modify
P3.41	Inspection speed start wait time	00.0～60.0	0.1s	2.0 s	○

P3.41 is used for setting waiting time for restart at 0 freq. when restart failed, adjusting the parameter to restart.

Func Code	Name	Range	Min Unit	Factory Default	Modify
P3.42	Inspection speed and start the	00.0～150.0%	0.1%	100.0%	○

P3.42 Is used to limit the maximum output current of restart for protection.

Func Code	Name	Range	Min Unit	Factory Default	Modify
P3.43	Running display parameter	00～15	1	00	○

This function is used for LED displayed parameter when inverter running. 0-15 relate to monitoring parameter b-01 to b-15. For example, output current will displayed on LED when setting P3.43=03. Users can monitor other parameters by pressing ►► key.

Func Code	Name	Range	Min Unit	Factory Default	Modify
P3.44	Stop display parameter	00～15	1	00	○

This function is used for LED displayed parameter when inverter running. 0-15 relate to monitoring parameter b-01 to b-15. For example, output current will displayed on LED when setting P3.43=03. Users can monitor other parameters by pressing ►► key.

Func Code	Name	Range	Min Unit	Factory Default	Modify
P3.45	No unit display coefficient	0.1～60.0	0.1	29.0	○

The function is used for proportional relationship of monitoring parameters b-06 and the output frequency;

b-06 displayed value=output freq.×P3.45.

Func Code	Name	Range	Min Unit	Factory Default	Modify
P3.46	JOG/REV Switching control	0～1	1	0	×

Select the JOG / REV key switching. Settings are as follows:

0： JOG running mode

1： REV running mode

6.5 Terminal Control Function Parameter (P4 Group)

Func Code	Name	Range	Min Unit	Factory Default	Modify
P4.00	Input terminal X1 function selection	0～30	1	0	×
P4.01	Input terminal X2 function selection	0～30	1	0	×
P4.02	Input terminal X3 function selection	0～30	1	0	×
P4.03	Input terminal X4 function selection	0～30	1	0	×
P4.04	Input terminal X5 function selection	0～30	1	0	×
P4.05	Input terminal X6 function selection	0～30	1	0	×
P4.06	Input terminal X7 function selection	0～30	1	0	×
P4.07	Input terminal X8 function selection	0～30	1	0	×
P4.08	Input terminal X1 function selection	0～30	1	0	×

The multifunctional input terminal X1~X8 provide various function. It can set the value of P4.00~P4.07 to define the function of terminal X1~X8 shown as Table 6-1. Terminal X7 -FWD terminal, X8 -REV terminal.

Table 6-1 Multifunctional input selection

content	function	content	function
0	Idle terminal	1	Multi-stage speed terminal 1
2	Multi-stage speed terminal 2	3	Multi-stage speed terminal 3
4	External FWD JOG control input	5	External REV JOG control input
6	Acc/Dec time terminal 1	7	Acc/Dec time terminal 2
8	Acc/Dec time terminal 3	9	3-wire control
10	Free stop input (FRS)	11	External stop command
12	Stopping DC brake input command DB	13	Inverter running prohibited
14	Freq. increase command(UP)	15	Freq. decrease command(DOWN)

content	function	content	function
16	Acc/Dec prohibited command	17	External reset input (clear fault)
18	Peripheral equipment fault input (normally open)	19	Freq. control channel selection 1
20	Freq. control channel selection 2	21	Freq. control channel selection 3
22	Command switched to terminal	23	Running command control mode selection 1
24	Running command control mode selection 2	25	Swing freq start mode selection
26	Swing freq running reset	27	Close loop invalid
28	Simple PLC running pause command	29	PLC invalid
30	PLC reset in stopping state	31	Freq. switched to CI
32	Counter trigger signal input	33	Counter clear input
34	External interrupt input	35	Pulse freq. input (only valid for X6)
36	Fire mode		

Description of function listed in Table 6-1:

1~3: Multi-stage speed control terminal

It can set 7-stage speed running frequency at most by selecting ON/OFF combination of these 3 control terminals and selecting Acc/Dec time at the same time shown as Table 6-2.

Table 6-2 Multi-stage speed running selection

K3	K2	K1	Freq. setting	Acc/Dec time
OFF	OFF	OFF	Normal running freq.	Acc/Dec time 1
OFF	OFF	ON	Multi-stage freq.1	Acc/Dec time 1
OFF	ON	OFF	Multi-stage freq.2	Acc/Dec time 2
OFF	ON	ON	Multi-stage freq.3	Acc/Dec time 3
ON	OFF	OFF	Multi-stage freq.4	Acc/Dec time 4
ON	OFF	ON	Multi-stage freq.5	Acc/Dec time 5
ON	ON	OFF	Multi-stage freq.6	Acc/Dec time 6
ON	ON	ON	Multi-stage freq.7	Acc/Dec time 7

The above multi-stage frequency can be used in multi-stage speed running mode and simple PLC running mode. Herein take multi-stage speed running for example as follow.

Define control terminal X1, X2, X3 as follow.

P4.00=1, P4.01=2, P4.03=3, that X1, X2, X3 are used to achieve multi-stage speed running shown as Fig.6-18.

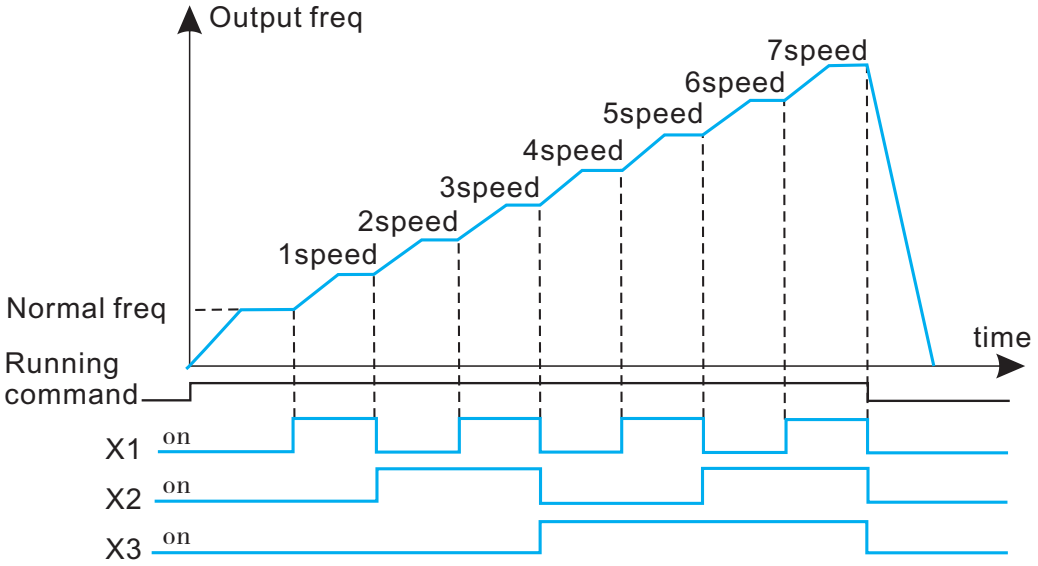

Fig 6-16 multi-stage speed running

Take terminal control mode for example as Fig.6-19, that K7,K8 can control forward or reverse running.

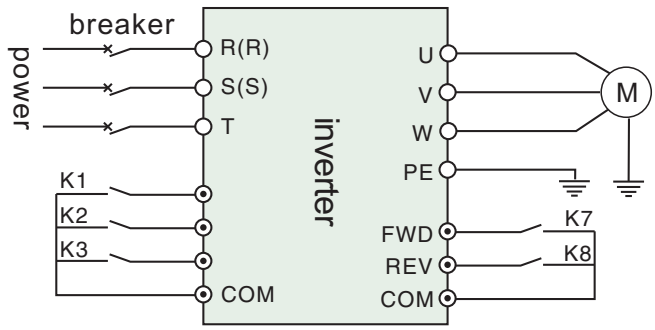

Fig.6-17 wiring diagram of multi-stage speed running

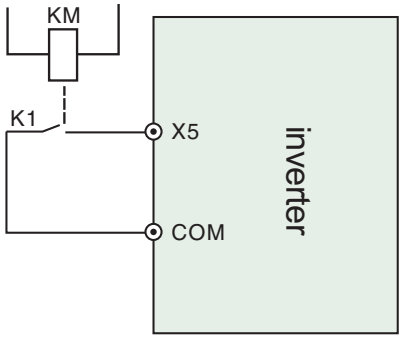

Fig.6-18 peripheral equipment

4~5: External JOG control input JOGP/JOGR.

In terminal control mode(P0.03=1), JOGP is JOG forward running, JOGR is JOG reverse running. JOG running frequency and JOG running Acc/Dec time is defined by P3.06~P3.08.

6 ~ 8 : Acc/Dec time terminal selection.

Table 6-3 Acc/Dec time terminal selection logical mode

Terminal 3	Terminal 2	Terminal 1	Acc/Dec time selection
OFF	OFF	OFF	Acc time1 / Dec time 1
OFF	OFF	ON	Acc time2 / Dec time 2
OFF	ON	OFF	Acc time3 / Dec time 3
OFF	ON	ON	Acc time4 / Dec time 4
ON	OFF	OFF	Acc time5 / Dec time 5
ON	OFF	ON	Acc time6 / Dec time 6
ON	ON	OFF	Acc time7 / Dec time 7

By ON/OFF combination of Acc/Dec time terminal the Acc/Dec time 1~7 can be selected accordingly.

9 : 3-wire control. Please refer to P4.08.

10 : Free stop input (FRS). This function is same as free stop defined by P2.05. But this is controlled by terminal which is convenient for remote control.

11 : External stop command. This command is effective in all running command control mode.

12 : Stopping DC brake input command DB. Use control terminal to execute DC brake to the motor during stop process in order to achieve motor emergency stop and accurate positioning. Brake start frequency, brake current, and brake time are defined by P2.06~P2.08.

13 : Inverter running prohibited. When this terminal is effective, the inverter in running state will go to stop, and the inverter in stopping state will be prohibited to start. This function is mainly used in application requiring safety linkage.

14 ~ 15 : Freq. Increasing command (UP), Freq. decrease command (DOWN). The frequency increase or decrease is controlled by control terminal. It can take the place of control panel in remote control mode.

16 : Acc/Dec prohibited command. To maintain the motor free from influence of any input command except stopping command, and keep running at the present speed.

Note: Function invalid at normal Dec stop process.

17 : External reset input(clear fault). When there is a fault alarm, it can reset the inverter by this terminal. This function is same as ENTER/DATA key in control panel.

18： Peripheral equipment fault input(normally open). The peripheral equipment fault can be input by this terminal for the convenience of inverter to monitor the peripheral equipment. The inverter will display‘E-13’, that is peripheral equipment fault alarm, after receiving peripheral equipment fault signal.

19～21： Freq. Control channel selection. The freq. control channel can be switchable by the ON/OFF combination of these 3 control terminals shown as Table 6-4. For this function and P0.01 defined function, the later set one is prior to previous one.

Table 6-4 Freq. control channel selection logical mode

Freq. control channel selection terminal 3	Freq. control channel selection terminal 2	Freq. control channel selection terminal 1	frequency control channel selection
OFF	OFF	OFF	Maintaining set Freq.
OFF	OFF	ON	Function code digital given
OFF	ON	OFF	Terminal UP/DOWN given
OFF	ON	ON	Serial port given
ON	OFF	OFF	VI
ON	OFF	ON	CI
ON	ON	OFF	PULSE
ON	ON	ON	Combination given(refer to P3.01)

22： Command switched to terminal. As this function is effective, the running control mode will be switched to terminal control mode.

23～24： Running control mode selection

The running control mode can be switchable by the ON/OFF combination of these 2 control terminals shown as Table 6-5. For this function and P0.03 defined function, the later set one is prior to previous one.

Table6-5 running control mode selection logical mode

Running control mode selection 2	Running control mode selection 1	Running control mode selection
OFF	OFF	Maintaining running control mode
OFF	ON	Control panel control mode
ON	OFF	Terminal control mode
ON	ON	Terminal control mode

25：Swing freq. start mode selection.

In swing frequency manual start mode, the swing frequency running will be effective as this terminal is effective (refer to P9 Group).

26：Swing freq. running reset

In swing frequency running mode, no matter it is in manual or automatically start mode, by closing this terminal it will clear the recorded data of swing frequency running. The swing frequency running will restart by disconnecting this terminal. (Referring to P9 Group)

27：Close loop invalid

In close loop running state, this function can invalidate the close loop running, and the inverter will switch to lower priority running mode.

Note:

- ✦ only in the closed-loop operation (P7.00 = 1) it can be switched between the closed-loop and low-level operating mode.

28：Simple PLC running pause command

In simple PLC running state, as this function is effective, the PLC running will pause, and the inverter will run at 0 HZ. As this function is invalid, the inverter will automatically execute running speed tracking start and continue PLC running (refer to P8 Group).

29：PLC invalid

In PLC running state, this function can invalidate the PLC running, and the inverter will swich to lower priority running mode.

30：PLC reset in stopping state

In the stopping state of PLC running mode, as this terminal is effective, the inverter will clear the data recorded in stopping state, such as PLC running stage, running time, and runing frequency, etc. (refer to P8 Group).

31：Freq. Switched to CI

When this function is effective, the frequency control channel will be switched to CI given.

32：Counter trigger signal input

There is a built-in counter in inverter, the max input pulse frequency to pulse input port is 200Hz. It can store memory the present counted data when power failure (refer to P4.21, P4.22).

33： Counter clear input

Clear the built-in counter to 0.

34： External interrupt input

In the running state, when inverter receives external interrupt signal, it will stop output, and run at zero frequency. After the interrupt signal is cancelled, the inverter will execute automatically the running speed tracking start mode, and continue to run again.

35： Pulse freq. input

Only valid for X4 terminal. This terminal receives pulse signal as frequency given command (refer to P1.11~P1.15).

36: Fire mode

Inverters ignore the control signal or alram in the fire mode. It will be possible to extend the reliable running time until it is damaged to ensure a safe evacuation in a smoke-free environment.

Func Code	Name	Range	Min Unit	Factory Default	Modify
P4.08	FWD/Rerunning mode selection	0～4	1	0	×

4 control modes:
0：2-wire control mode 1

K2	K1	Command
0	0	Stop
0	1	FWD
1	0	REV
1	1	Stop

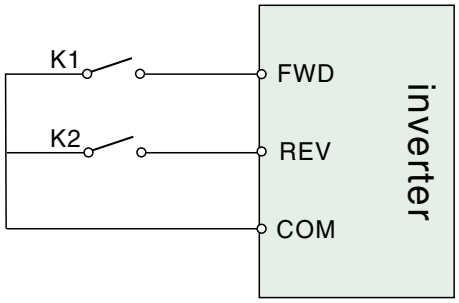

Fig.6-19 2-wire control mode1

1：2-wire control mode 2

K2	K1	Command
0	0	Stop
1	0	Stop
0	1	FWD
1	1	REV

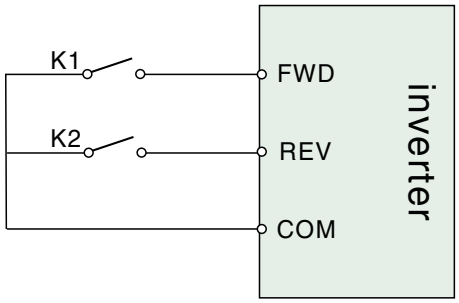

Fig.6-20 2-wire control mode 2

2：3-wire control mode 1

Xi is one of multifunctional input terminal X1~X6 which should be defined to function 9, that is 3-wire control mode.

SB1 ：STOP
SB2 ：FWD
SB3 ：REV

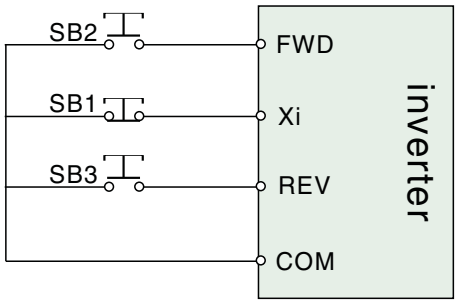

Fig.6-21 3-wire control mode 1

3：3-wire control mode 2

Xi is one of multifunctional input terminal X1~X6 which should be defined to function 9, that is 3-wire control mode.

K2	Command
0	FWD
1	REV

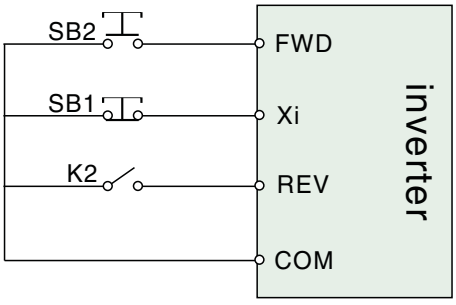

Fig.6-22 3-wire control mode 2

Note:

✦ In alarm stopping mode, if the running control mode is selected as terminal control mode and FWD/REV terminal is effective, the inverter will start at once after fault reset.

Func Code	Name	Range	Min Unit	Factory Default	Modify
P4.09	UP/DN Rate	0.01-99.99Hz/s	0.01	1.00 Hz/s	○

This function code defines the rate of change of set frequency given by UP/DOWN terminal.

Func Code	Name	Range	Min Unit	Factory Default	Modify
P4.10	2-way open collector output terminal OC1 output selection	0～22	1	0	×
P4.11	2-way open collector output terminal OC2 output selection	0～22	1	0	×
P4.12	Relay TA/TB/TC output selection	0～22	1	0	×
P4.13	Relay RA/RB/RC output selection	0～22	1	0	×

OC1 Open collector output terminal，Table 6-6 is for function optional parameters.

Table 6-6 Output terminal function selection

content	function	content	function
0	Inverter is running(RUN)	1	Freq. arrival signal(FAR)
2	Freq. level detected signal(FDT1)	3	reversed
4	Overload pre-alarm signal（OL）	5	Under voltage locking（LU）
6	External faults stopping（EXT）	7	Output freq. upper limit（FH）
8	Output freq. lower limit（FL）	9	Inverter in 0 speed running
10	Simple PLC stage running finish	11	PLC running cycle finish
12	Set counts arrival	13	Specified counts arrival
14	Inverter ready for running（RDY）	15	Inverter fault
16	Start freq. running time	17	DC brake time when start

content	function	content	function
18	DC brake time when stop	19	Swing freq. upper/lower limit
20	Set running time arrival	21	Upper pressure alarm signal
22	Lower pressure alarm signal		

The description of function listed in Table 6-6 as follow.

0： Inverter in running(RUN). In the running state, it outputs index signal.

1： Freq. arrival signal(FAR). Please refer to P4.12.

2： Freq. level detected signal(FDT1). Refer to P4.11~P4.12.

3：reserved

4： Overload pre-alarm signal(OL). As inverter output current exceeds P5.02 defined overload detected level and the time is longer than P5.03 defined overload detected time. It outputs index signal.

5： Under voltage locking(LU). In the running state, when DC bus bar voltage is lower than limited level, the inverter will display ‘E-11’ and outputs index signal.

6： External fault stopping(EXT). When external fault alarm occurs (E-13), it outputs index signal.

7： Output freq. upper limit(FH). When set freq upper limit freq, and running frequency reaches upper limit freq, it outputs index signal.

8： Output freq. lower limit(FL). When setting freq lower limit freq, and running frequency reaches lower limit frequency, it outputs index signal.

9： Inverter in zero speed running. When the inverter outputs 0 HZ, but still in running state, it will outputs index signal.

10： Simple PLC stage running finish. When present simple PLC stage finishes, it outputs index signal.(single pulse signal, width is 500ms).

11: A PLC running cycle finish. When a simple PLC running cycle finishes, it outputs index signal.(single pulse signal, width is 500ms).

12： Set counts arrival.

13： Specified counts arrival. (Refer to P4.21~P4.22)

14： Inverter ready for running(RDY). When this signal outputs, it means the inverter bus bar voltage is normal, and the inverter running prohibited terminal is invalid, that inverter can start.

15： Inverter fault. When fault occurs in the running state, it outputs index signal.。

16： Start freq. running time .

17： DC brake time when start.

18： DC brake time when stop.

19： Swing freq. upper/lower limit. In swing frequency running mode, if the fluctuation range of swing frequency calculated according to center freq. exceeds upper limit freq.P0.19 or below lower limit freq.P0.20, it outputs index signal.

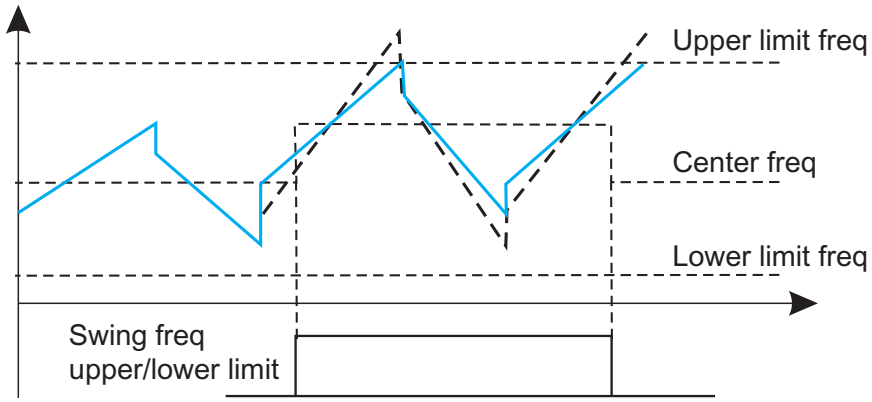

Fig.6-23 swing freq. upper/lower limit

20： Set running time arrival. When inverter total running time (P3.40) reaches set running time (P3.39), it outputs index signal.

21: upper pressure alarm signal. On closed-loop control, Inverter output alarm signal when the pipeline pressure is greater than the upper limit of pressure.

22: Lower pressure alarm signal. On closed-loop control, Inverter output alarm signal when the pipeline pressure is lower than the lower limit of pressure.

Func Code	Name	Range	Min Unit	Factory Default	Modify
P4.14	Freq. arrival detection range	0.00～400.00Hz	0.01Hz	5.00Hz	×

This function is a complement to function 1 listed in Table 6-6. When inverter output frequency is in the “+ -” detection range of set frequency, it outputs pulse signal shown as Fig.6-24.

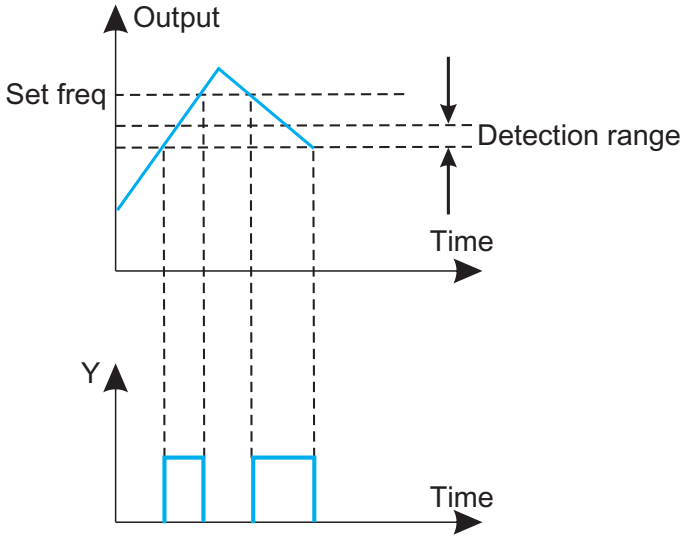

Fig.6-24 Freq. arrival detection range

Func Code	Name	Range	Min Unit	Factory Default	Modify
P4.15	Freq. arrival detection range	0.00～400.00Hz	0.01Hz	5.00Hz	×
P4.16	FDT1 lag	0.00～50.00Hz	0.01Hz	1.00Hz	○

P4.13~P4.14 are the complement to function 2 listed in Table 6-6. P4.15~P4.16 are the complement to function 3 listed in Table 6-6. Both are same in usage. For example, when output frequency exceeds a certain set frequency (FDT1), it outputs index signal until output frequency decreasing to a certain frequency lower than FDT1 (FDT1-FDT1 lag) shown as Fig.6-25.

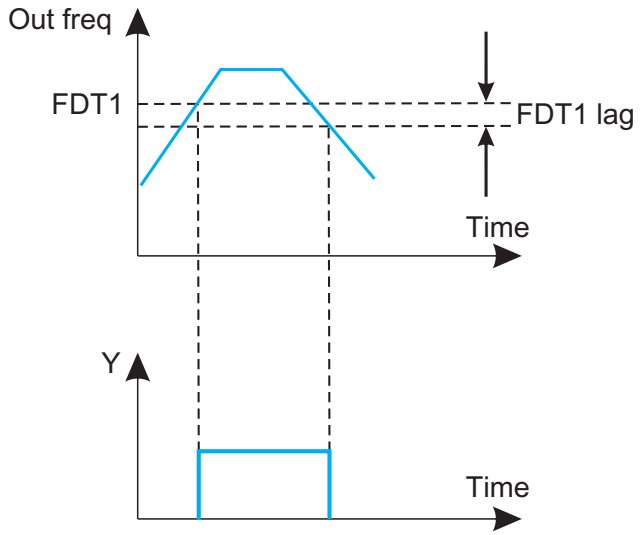

Fig.6-25 freq level detection

Func Code	Name	Range	Min Unit	Factory Default	Modify
P4.17	Analog output (Ao1) selection	0～7	01	00	○
P4.18	Analog	0.50～2.00	0.01	1.00	○
P4.19	Analog output (AO2) selection	0～7	01	00	○
P4.20	Analog output (AO2) gain	0.50～2.00	0.01	1.00	○

6-7 Output terminal indication

Content	Function	Indication range
0	Output freq.	0～limit freq
1	Output current	0-2×rated current
2	Output voltage	0-1.2×motor rated voltage
3	Bus bar voltage	0-800V
4	PID given	0～10V
5	PID feedback	0～10V
6	VI	0～10V
7	CI	0～10V/4～20mA

Ten ’ s content	Function	description
0	0～10V	Output voltage 0～10V
1	0～20mA	Output current 0～20mA，AO1jumper to 1
2	4～20mA	Output current 4～20mA ，AO1 jumper to 1

As to AO analog output, if user wants to change measuring range or adjust meter tolerance, it can be achieved by regulating the output gain.

Func Code	Name	Range	Min Unit	Factory Default	Modify
P4.21	DO output terminal	0～7	0.01Hz	5.00Hz	○

Please refer to Table 6-7.

Func Code	Name	Range	Min Unit	Factory Default	Modify
P4.22	DO max pulse output freq.	0.1K～20.0K (max 20KHz)	0.1KHz	10.0KHz	○
P4.23	Set counts given	F4.20～9999	1	0	○
P4.24	Specified counts given	0～F4.19	1	0	○

P4.21,P4.22 are the complement to function 12,13 listed in Table 6-6.

Set counts given: It refers to when how many pulse signals input from Xi (count trigger signal input function terminal), OC (2-way open collector output terminal) or relay outputs an index signal.

When Xi inputs the 8th pulse signal, OC outputs an index signal, that is P4.21=8, shown as Fig.6-26.

Specified counts given: It refers to when how many pulse signals input from Xi, OC or relay outputs an index signal, until set counts arrival.

When Xi inputs the 5th pulse signal, relay outputs an index signal, until set counts 8 arrival, that is P4.22=5, shown as Fig.6-27. When specified counts bigger than set counts, specified counts invalid.

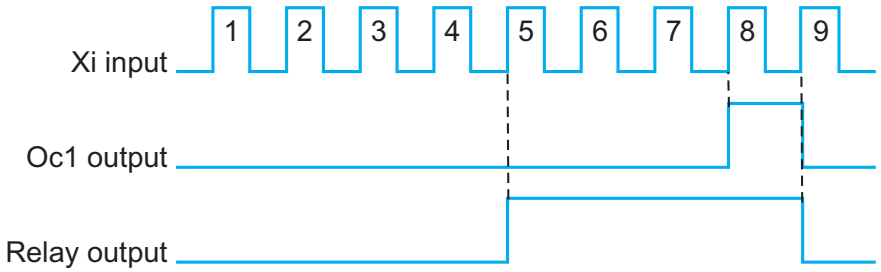

Fig.6-26 set counts given and specified counts given

Func Code	Name	Range	Min Unit	Factory Default	Modify
P4.25	Overload pre-alarm detection level	20%～200%	1	130%	○
P4.26	Overload pre-alarm delay time	0.0～20.0s	0.1s	5.0s	○

If output current exceeds continuously current detection level set by P4.23 (the actual detection level current = P4.23 X inverter rated current), after the delay time set by P4.24, the open collector outputs valid signal shown as Fig. 6-27 (refer to P4.11).

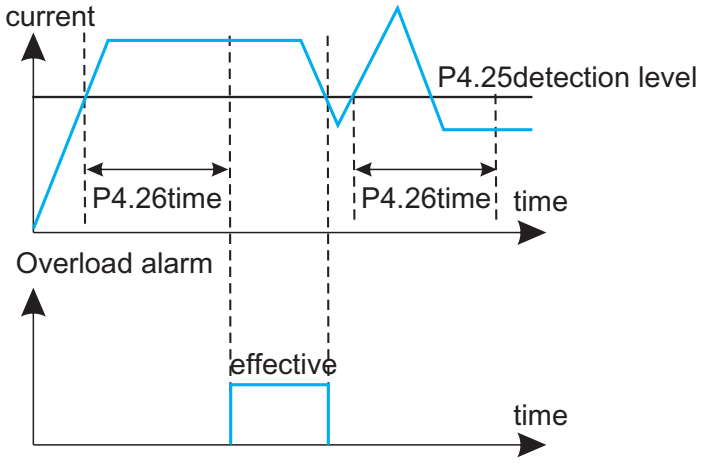

Fig.6-27 overload alarm

6.6 Protection Function Parameter (P5 Group)

Func Code	Name	Range	Min Unit	Factory Default	Modify
P5.00	Motor overload protection mode selection	0～1	1	0	×

This parameter defines the inverter protection mode in the case of overload, over current.

0: Stop outputting: In the case of overload, over current, the inverter will stop outputting at once, and the motor will go to free stopping

1: Inaction: Without overload protection to load motor , please use this function in caution.

Func Code	Name	Range	Min Unit	Factory Default	Modify
P5.01	Motor overload protection coefficient	20～120%	1	100%	×

This parameter is used for setting sensitivity of thermal relay protection to load motor. When motor output current doesn't match inverter rated current, by setting this parameter it could get correct protection to motor, shown as Fig.6-28.

$$[P5.01] = \frac{\text{Motor rated current}}{\text{Inverter rated output current}} * 100\%$$

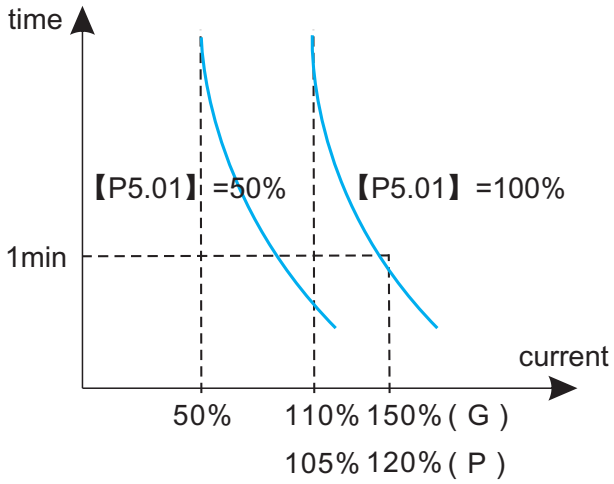

Fig. 6-30 Thermal relay protection

Note:

- Note: When one inverter drives multi-motor in linkage running, the thermal relay protection will be out of action. Please install thermal relay to each motor input terminal as to protect the motor effectively.

Func Code	Name	Range	Min Unit	Factory Default	Modify
P5.02	Overvoltage stall Selection	0～1	1	1	×
P5.03	Overvoltage stall point	380V：120～150% 220V：110～130%	1%	140% 120%	○

0：prohibited

1：allowed

In inverter Dec running process,because of the affection of load inertia,the actual Dec rate of motor speed may be lower than output frequency Dec rate. At this moment the motor will feed back electrical energy to inverter which will cause the bus bar voltage rising. If don't take measures, the overvoltage protection will be triggered In the inverter Dec running process, the overvoltage stall protection function will detect the bus bar voltage and compare it with overvoltage stall point defined by P5.03 (relative to standard bus bar voltage), if it exceeds overvoltage stall point, the inverter will stop decreasing output frequency. After detecting bus bar voltage lower than overvoltage stall point again, the Dec process will restart, shown as Fig.6-29.

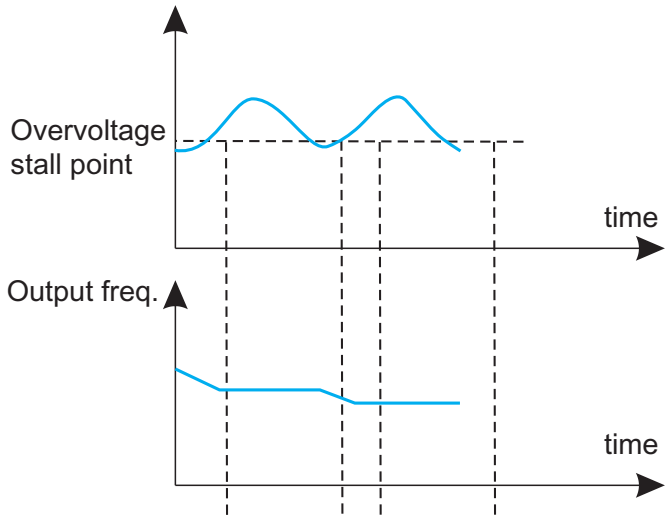

Fig.6-29 overvoltage stall

Func Code	Name	Range	Min Unit	Factory Default	Modify
P5.04	Auto current limit level	110%～200%	1%	150%	×
P5.05	Freq. drop rate during current limit	0.00～99.99Hz/s	0.01Hz /s	10.00Hz /s	○
P5.06	Auto current limit mode selection	0～2	1	1	×

Auto current limit function is to auto limit the load current not to exceed auto current limit level (P5.04) by real time monitoring the load current in order to prevent fault trip caused by over current. It is suitable to some applications with bigger inertia or load change in intensity.

Function code P5.04 defines the current threshold value of auto current limit action; the set range is a percentage to inverter rated current. Function code P5.05 defines regulating rate to output frequency during auto current limit action.

If freq. drop rate (P5.05) during current limit is too small to get rid of auto current limit state, it may finally cause load fault. If freq. drop rate is too big to intensify frequency regulating range, it may cause inverter overvoltage protection.

Auto current limit function is always valid during Acc/Dec state. Auto current limit mode selection (P5.06) defines whether auto current limit function is valid in constant speed running state.

P5.06=0 Auto current limit invalid in constant speed running;

P5.06=1 Auto current limit valid in constant speed running;

Auto current limit function is not suitable to constant speed running requiring stable output frequency, because the output frequency may changes during auto current limit action.

When P5.06 = 2, when the output current is more than 2 times of the rated current, the inverter will automatically block the output, the output frequency will drop to 0.00Hz, and after the time defined by P3.37, the inverter will restart from 0HZ. This function is used in situations where the inverter is often overloaded and cannot be stopped, such as pipelines, conveyor belts, etc.

Func Code	Name	Range	Min Unit	Factory Default	Modify
P5.07	Restart setting after power failure	0～1	1	0	×
P5.08	Restart waiting time after power failure	0.0～10.0s	0.1s	0.5s	×

P5.07 = 0，Restart after momentary power failure inaction;

P5.07 = 1，Restart after momentary power failure inaction;

If occur momentary power failure (LED displays 'E-11') in inverter running state, when power comes back, the inverter will automatically execute tracking speed restart mode after waiting for time set by P5.08. During the waiting time, even there is a run command inputting, the inverter will not restart. If stopping command is input at that time, the inverter will cancel tracking speed restart.

Func Code	Name	Range	Min Unit	Factory Default	Modify
P5.09	Restart setting after power failure	0～10	1	0	×
P5.10	Self-recovery interval time	0.5～20.0s	0.1s	5.0s	×

During inverter running, fault may occur accidentally and inverter output may stop due to load fluctuation. At the moment, user may use fault self-recovery function in order not to stop running of equipment driven by inverter. In the process of self-recovery, the inverter will execute tracking speed restart mode. If the inverter fails to restart successfully in set times defined by P5.10, it will execute fault protection and stop output.

Note:

- This function is used on condition that the inverter has no substantial fault and self-recovery function is allowed by equipment;
- This function is invalid to fault protection due to overload or overheat.

Func Code	Name	Range	Min Unit	Factory Default	Modify
P5.11	Input missing phase protection	0～1	1	0	○

0: Inaction; 1: Action

Note:

- U phase missing protection, displays E-26;
- V phase missing protection, displays E-27;
- W phase missing protection, displays E-28.

6.7 Fault Record Function Parameter (P6 Group)

Func Code	Name	Range	Min Unit	Factory Default	Modify
P6.00	Previous failure record	Previous failure record	1	0	*
P6.07	Previous secondary fault record	Previous secondary fault record	1	0	*
P6.08	Previous third failure records	Previous third failure records	1	0	*
P6.09	Previous fourth failure record	Previous fourth failure record	1	0	*
P6.10	Previous fifth failure record	Previous fifth failure record	1	0	*
P6.11	Previous sixth failure record	Previous sixth failure record	1	0	*

0: No fault

1 ~ 17 : E-01~E-17 fault, refer to Chapter 7.

Func Code	Name	Range	Min Unit	Factory Default	Modify
P6.01	Output frequency at the previous fault	Output frequency at the previous fault	0.01Hz	0	*
P6.02	Set frequency at the previous fault	Set frequency at the previous fault	0.01Hz	0	*
P6.03	Output current at the previous fault	Output current at the previous fault	0.1A	0	*
P6.04	Output voltage at the previous fault	Output voltage at the previous fault	1V	0	*
P6.05	DC bus voltage at the previous fault	DC bus voltage at the previous fault	1V	0	*
P6.06	Module temperature at the previous fault	Module temperature at the previous fault	10C	0	*

6.8 Close Loop Running Control Function parameter (P7 Group)

Analog feedback control system:

Input pressure given value by VI and input 4~20mA feedback value of pressure sensor by CI, constitute an analog feedback control system through built-in PI adjuster shown as Fig.6-30.

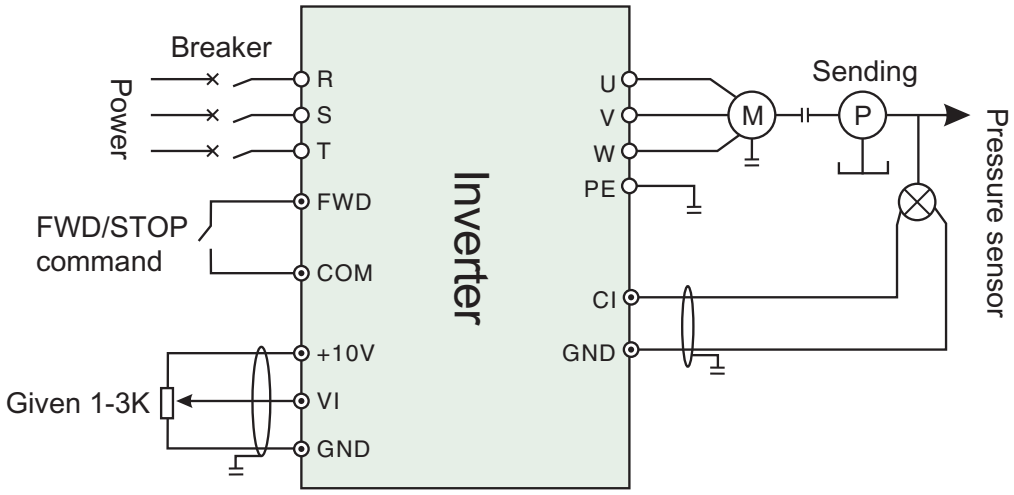

Figure 6-30 Built-in PI simulation feedback control system diagram

Func Code	Name	Range	Min Unit	Factory Default	Modify
P7.00	Close loop running control selection	0～1	1	0	×

0：Invalid

1：Valid

Func Code	Name	Range	Min Unit	Factory Default	Modify
P7.01	Close loop given channel selection	0～2	1	0	×

0: Digital given

1: VI analog 0~10V voltage given。

2: CI analog 0~10V voltage given or 4~20mA current given. To speed close loop, analog given 10V corresponding the rotate speed of max output frequency.

Func Code	Name	Range	Min Unit	Factory Default	Modify
P7.02	Feedback channel selection	0～6	1	0	×

0: VI analog 0~10V input voltage

1: CI analog0~10V input voltage

2：VI +CI

3：VI - CI

4：Min｛VI、CI｝

5：Max｛VI、CI｝

6：CI analog 4 - 20mA input voltage. System board JP3 jumper to jump to the " I " side, so as to select 4 ~ 20mA current feedback input.

Func Code	Name	Range	Min Unit	Factory Default	Modify
P7.03	Given channel filtering time constant	0.01～50.00s	0.01s	0.50s	○
P7.04	Feedback channel filtering time constant	0.01～50.00s	0.01s	0.50s	○

External to a given and feedback channels are often superimposed on the interference, by setting the P7.03 and P7.04 filter time constant on the channel filter, filter the longer the anti-interference ability is stronger, but the response is slow. Filter time shorter response more quickly, but the anti-interference ability is weak.

Func Code	Name	Range	Min Unit	Factory Default	Modify
P7.05	Given value digital setting	0.001～20.000Mpa	0.001 Mpa	0.000M pa	×

As P7.01=0, P7.05 defined value is used as close loop control system given value, that user can change system given value by revising P7.05 when using control panel or serial port to control close loop system.

Func Code	Name	Range	Min Unit	Factory Default	Modify
P7.06	Close loop adjustment characteristics	0～1	1	0	○

The parameters used to define the feedback signal and the preset relationship between signal:

0：Positive characteristic: Said feedback signal corresponding to maximum capacity maximum.

1：Negative characteristic: Said feedback signal corresponding to maximum quantity minimum.

Func Code	Name	Range	Min Unit	Factory Default	Modify
P7.07	Feedback channel gain	0.01～10.00	0.01	1.00	×

As the feedback channel and the channel signal level is not consistent, with the parameters of the feedback channel signal gain adjustment.

Func Code	Name	Range	Min Unit	Factory Default	Modify
P7.08	Lower pressure limit	0.01～10.00	0.001	0.001	○
P7.09	Upper pressure limit	P7.08～P7.27	0.001	1.000	○

This parameter is used to set upper and lower limit pressure, when the set pressure is greater than the P7.09 value, the maximum set pressure value for P7.09, when the set pressure is less than the value of P7.08, set the minimum pressure for the P7.08 value.

Func Code	Name	Range	Min Unit	Factory Default	Modify
P7.10	PID Controller structure	0.01～10.00	1	1	×

This parameter is used to select the built-in PID controller structure.

0：Proportional control；

1：Integral control;

2：Proportion, integral control；

3：Proportion, integral, differential control.

Func Code	Name	Range	Min Unit	Factory Default	Modify
P7.11	Proportional gain KP	0.00～5.00	0.01	0.50	○
P7.12	Integral time constant	0.1～100.0s	0.1	10.0s	○
P7.13	Differential gain	0.0～5.0	0.1	10.0s	×

Built-in PID controller parameters setting, should according to the actual demand and system adjustment.

Func Code	Name	Range	Min Unit	Factory Default	Modify
P7.14	Sampling period	0.01～1.00s	0.01	0.10	○

Feedback value sampling period.

Func Code	Name	Range	Min Unit	Factory Default	Modify
P7.15	Tolerance limit	0.0～20.0%	0.1%	0.0%	○

Loop setting point maximum allowable deviation, as shown in figure 6-37. When the amount of feedback keeps in this range, the PI regulator will stop adjustment. This function is reasonable use contribute to the coordination of system output precision and stability of the contradiction between.

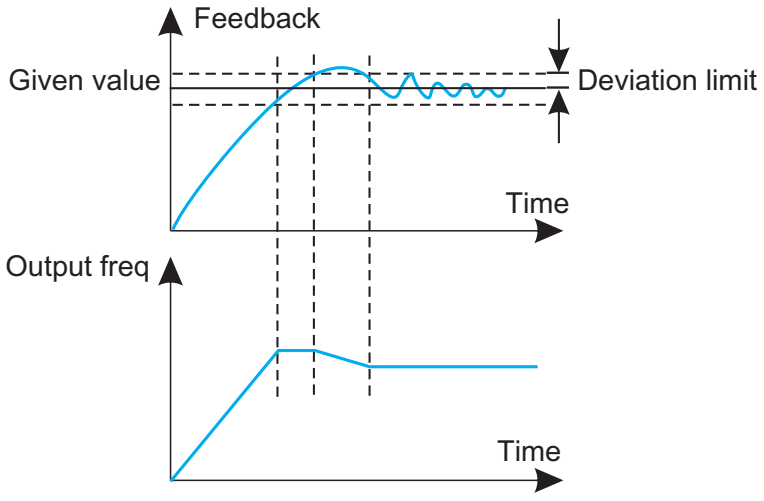

Fig.6-31 Deviation limit

Func Code	Name	Range	Min Unit	Factory Default	Modify
P7.16	PID Feedback disconnected detection threshold	0.0~20%	0.1%	0.0%	○
P7.17	PID Feedback disconnected action selection	0～4	1	0	○
P7.18	PID Feedback disconnected operation delay time	0.01～5.00s	0.01s	1.00s	○

As the PID feedback value below P7.16 set detection threshold, the accumulated delay time P7.18 seconds later, it is judged to feedback disconnected. The action will be defined by the parameter P7.17 selection after feedback offline.

0: inverter keep working at sleeping frequency(P7.22)

1. Inverter keep working at P0.02 setting frequency;

2. Inverter keep working at upper frequency (max frequency);

3. Inverter stop and show E-31 error;

4. inverter keep working at sleeping frequency(P7.22).

Func Code	Name	Range	Min Unit	Factory Default	Modify
P7.19	Pressure level	0.001～P7.20	0.001 Mpa	0.001Mpa	○

This parameter defines the system from a hibernation state to enter the working state of the pressure limit.

As the pipeline pressure is smaller than the set value, illustrate the tap water pressure to reduce or increase in the water content, frequency conversion water supply system automatically from the dormant state to state.

Func Code	Name	Range	Min Unit	Factory Default	Modify
P7.20	Hibernation pressure level	P7.19～P7.27	01	00	○

This parameter defines the system enters a hibernation state stress limit value.

As the pipeline pressure is greater than the set value, and the frequency of water supply systems have been adjusted to the hibernation frequency operation, descriptions of actual water decrease sharply or tap water pressure increases, the frequency of water supply system to automatically enter a state of dormancy, stop wait wake.

As the water supply system to reach the awake and hibernation condition, enter the awakening and hibernation latency by the parameter P7.21 and P7.23 to determine.

Func Code	Name	Range	Min Unit	Factory Default	Modify
P7.21	Hibernation level continuous time	0～250s	1s	10s	○

The parameter setting in hibernation, pipe network pressure in hibernation pressure level maintained in continuous time.

Func Code	Name	Range	Min Unit	Factory Default	Modify
P7.22	Hibernation frequency	0.00～400.0Hz	0.01Hz	20.00Hz	○

The parameter is setting the minimum operating enter into hibernation state.

Func Code	Name	Range	Min Unit	Factory Default	Modify
P7.23	Hibernation frequency continuous time	0～250s	1s	10s	○

The parameter is setting inverter running time, when reach the hibernation frequency.

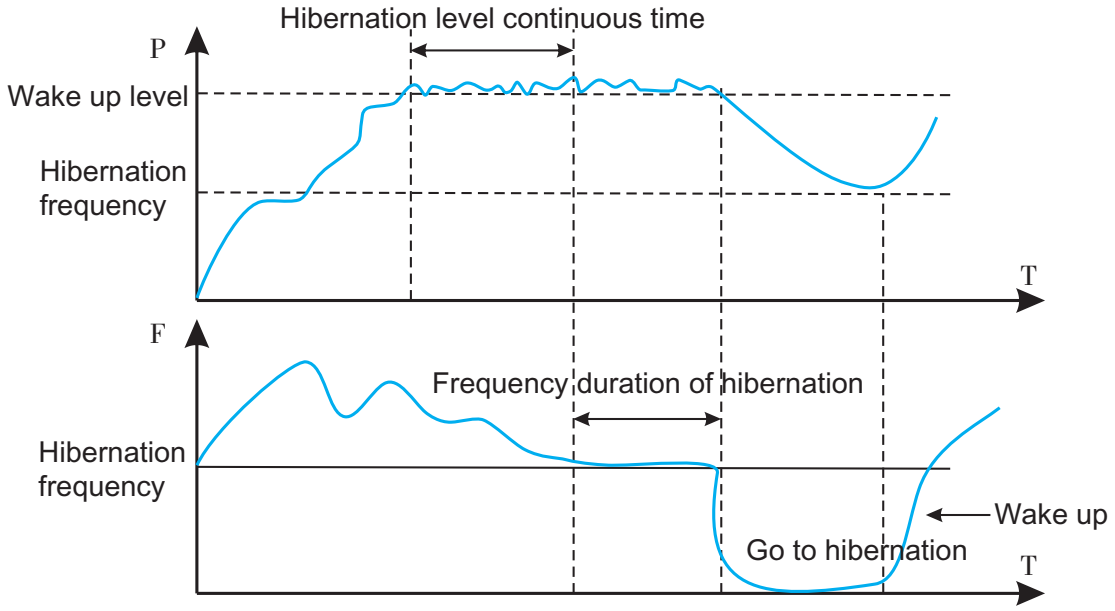

Fig.6-32 Hibernation wake diagram

Func Code	Name	Range	Min Unit	Factory Default	Modify
P7.24	Low alarm limit pressure	0.001～P7.25	0.001 Mpa	0.001Mpa	○
P7.25	The alarm limit pressure	P7.24～P7.27	0.001 Mpa	0.001Mpa	○

As the pressure of a pipe network under lower pressure, and the inverter frequency reaches the set upper limit frequency of or all the pump frequency operation, indicates that the pipeline under pressure, frequency converter can output alarm signal. P4.10 or P4.11 is set to 21, then the maximum pressure alarm.

As the pipeline pressure is greater than the upper limit of pressure, and the inverter frequency reaches the set lower limit of frequency, indicates that the pipeline pressure, frequency converter can output alarm signal. This function can be used to determine the pipeline blocking. P4.10 or P4.11 is set to 22, is the output of lower pressure alarm.

Func Code	Name	Range	Min Unit	Factory Default	Modify
P7.26	Constant pressure water supply mode	0～4	1	0	×

0：No constant pressure water supply mode.

1：One pump water supply mode（Selection of the constant pressure water supply board）。

2：Two pumps water supply mode（Selection of the constant pressure water supply board）。

3： Three pumps water supply mode（Selection of the constant pressure water supply board）。

4：Four pumps water supply mode（Selection of the constant pressure water supply board）.

Func Code	Name	Range	Min Unit	Factory Default	Modify
P7.27	Remote pressure gauge range	0.001～20.000Mpa	0.001 Mpa	1.000Mpa	○

This parameter setting is equal to actual use of gauge range, corresponding to 10V or 20mA.

Func Code	Name	Range	Min Unit	Factory Default	Modify
P7.28	Multi pump operation mode	0～1	1	0	○
P7.29	Rotation in timed intervals	0.5～100.0H	0.1H	5.0H	○

Multi pump operation mode for each pump capacity the same system。

0：Fixed sequence shift: According to the detected pressure changes at a fixed shifting sequence plus or minus pump. General pump start from 0;

1：Timing of the Shift: This way is actually at a certain time after redefine each pump number, to ensure that each pump can get equal chance and time to run, in order to prevent the pump break for a long time no using. Timing of operation time by P7.29 parameter defined.

Func Code	Name	Range	Min Unit	Factory Default	Modify
P7.30	Pump switching judgment time	0.1～1000.0s	0.1s	300.0s	○

This parameter is used to set the judgment of stability time, when increase or deduce the pump Nos. The setting of parameters too short will cause the system pressure shocks, but the pressure response more quickly.

Func Code	Name	Range	Min Unit	Factory Default	Modify
P7.31	Electromagnetic switching delay time	0.1～10.0s	0.1s	0.5s	×

The parameters used to define system delay time of electromagnetic switch, when the switching from Grid frequency to Variable frequency or Variable frequency to Grid frequency.. In order to prevent the circuit shorten between the inverter output terminal and power supply caused by electromagnetic switch delay.

Func Code	Name	Range	Min Unit	Factory Default	Modify
P7.32	PID Control of positive and negative role and feedback pressure error polarity	00～11	1	00	×
P7.33	Feedback error of pressure adjustment coefficient	0.001～20.000Mpa	0.001 Mpa	0.000M pa	×

PID Control of positive and negative role and feedback pressure error polarity	
Unit：	0: PID forward action 1: PID reverse action
Ten：	0: The feedback pressure is greater than the actual pressure 1: feedback pressure is less than actual pressure
Hundred：	0: wake up sleep pressure is actual pressure 1: wake up sleep pressure is set pressure
Thousand：	0: Press to view the monitoring parameters, and the B group monitoring parameters are viewed in order 1: Press to view the monitoring parameters. The monitoring parameters of group B only view the three parameters of set pressure, output current and output frequency

As the PID is stable, found the set pressure and actual pipeline pressure deviation, can be adjusted by P7.32 and P7.33 to eliminate the error, when the actual pipeline pressure is greater than set pressure, P7.3 ten bit set to " 1 ", and the P7.33= actual pressure setting pressure, when the actual pipeline pressure is greater than set pressure, P7.33 ten bit set to " 0 ", and the P7.33=set pressure - the actual pressure.

Func Code	Name	Range	Min Unit	Factory Default	Modify
P7.34	Closed loop of preset frequency	0～Upper limit freq	0.00Hz	0.00Hz	×
P7.35	Closed loop of preset frequency holding time	0.0～200.0s	0.1s	0.0s	×

The function code can make the closed-loop regulation quickly into the stable stage.

Inverter will accelerate to closed loop of preset point P7.34 and running at the frequency for a period of time. After that time, inverter will run as closed loop operation.

6.9 PLC Running Parameter (P8 Group)

Simple PLC function is a multi-stage speed generator. The inverter can auto change frequency and running direction in set running time to satisfy the techniques command shown as Fig.6-33.

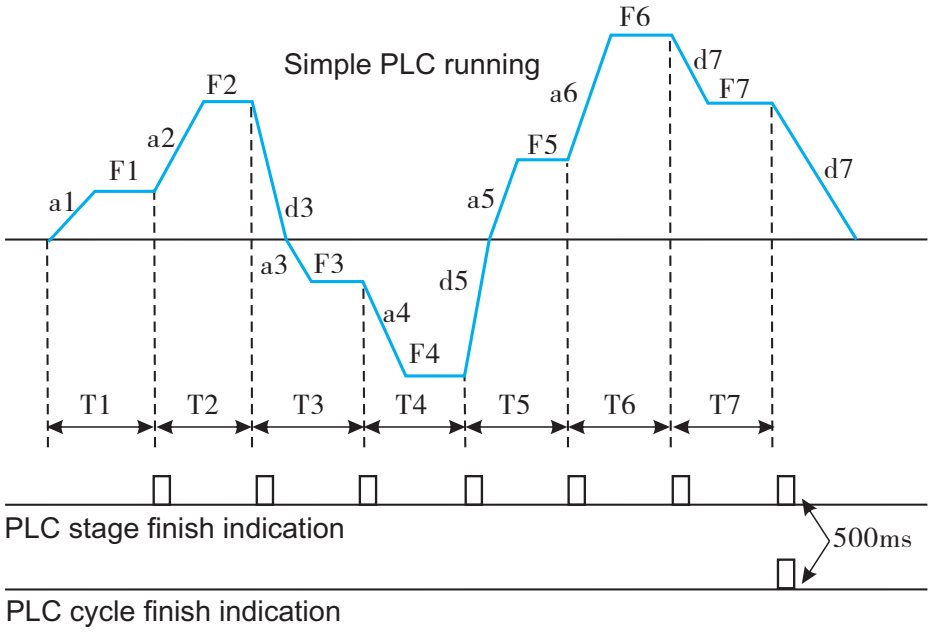

Fig.6-33 simple PLC running

a1~a7, d1~d7 are Acc and Dec time in each stage shown as Fig.6-39, which are defined by Acc/Dec time parameter P0.17,P0.18 and P3.14~P3.25.

F1~F7, T1~T7 are running frequency and running time which are defined by function code P8.01~P8.14.

Func Code	Name	Range	Min Unit	Factory Default	Modify
P8.00	PLC running mode selection	LED unit: 0~3; ten: 0,1; hundred: 0,1; thousand:0,1	1	0000	×

LED unit's digit: PLC running mode selection

0: naction

1: Stop after single cycle

The inverter will stop automatically after one cycle. It will restart after receiving a new running command shown as Fig.6-34.

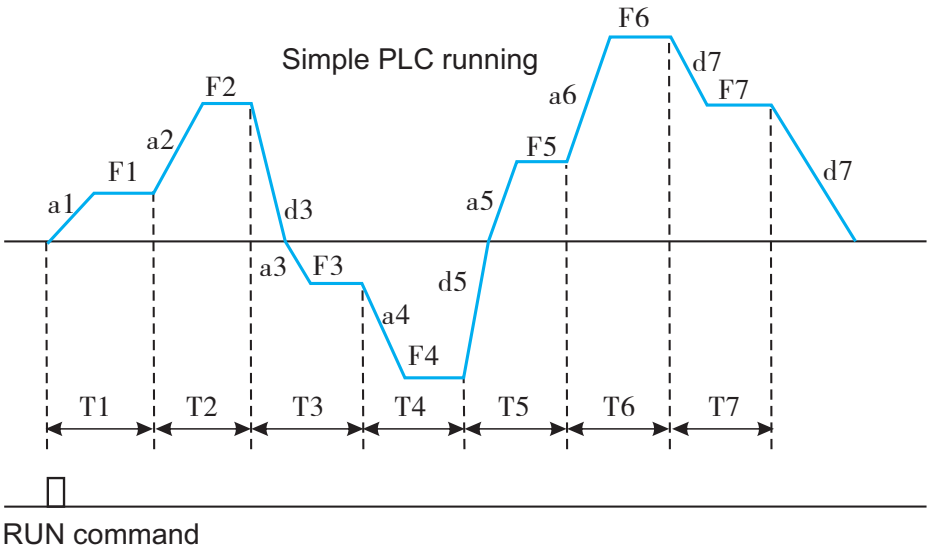

Fig.6-34 PLC stop after single cycle

2：Running at final frequency after single cycle:

The inverter will keep running at the frequency and direction of final stage after one cycle. It will stop in set dec time after receiving stopping command shown as Fig.6-35.

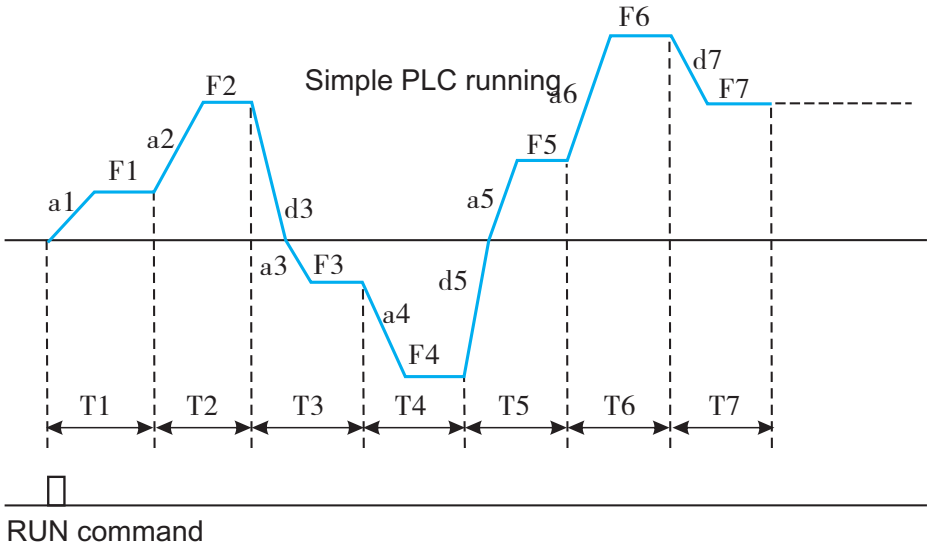

Fig.6-35 PLC running at final frequency after single cycle

3：Continuous cycle

The inverter automatically starts a new cycle after one cycle finish until receiving stopping command shown as Fig.6-36.

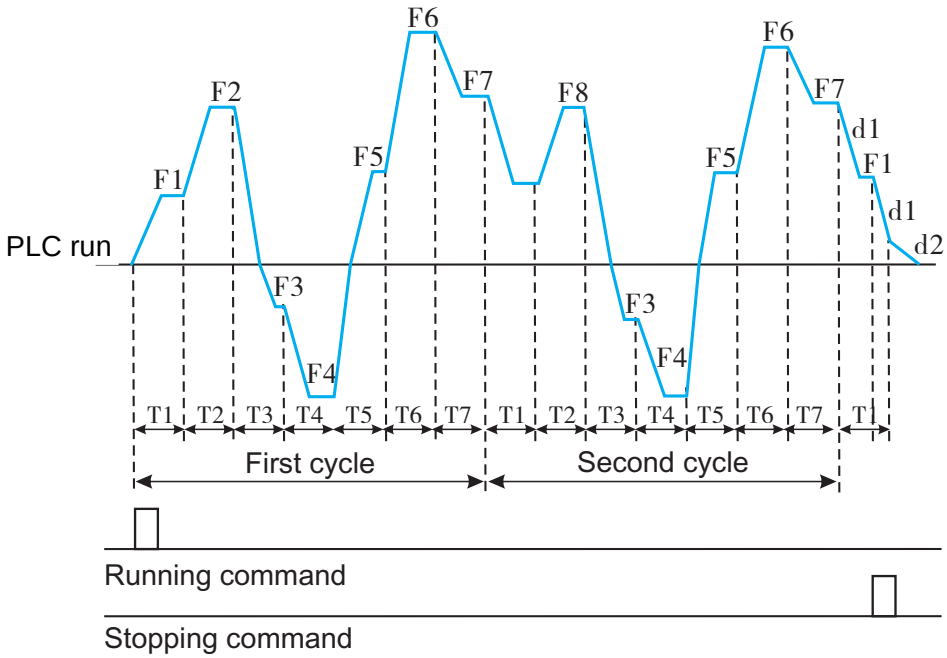

Fig.6-36 PLC continuous cycle

LED ten's digit: PLC restart mode selection

0 : Restart from the first stage after stop caused by stopping command, fault or power failure.

1: Restart from the freq. of break stage. After stop caused by stopping command or fault, the inverter will record the running time completed of starts from break stage and runs at set freq. of break stage in rest time of break stage shown as Fig.6-37.

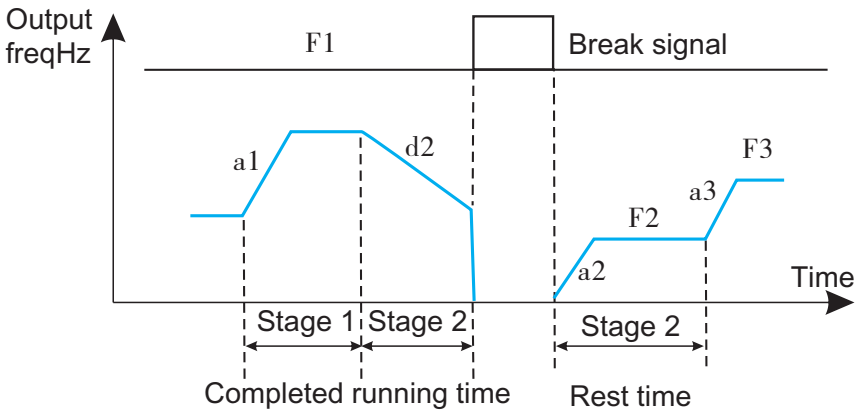

a1: Acc time of stage 1 a2: Acc time of stage 2 a3:Acc time of stage 3
d2: Dec time of stage 2 F1: freq of stage 1 F2: freq of stage 2 F3: freq of stage 3

Fig.6-37 PLC restart mode 1

LED hundred's digit: PLC state parameter save mode selection

0: No save. Inverter don't save PLC running state after power failure and restart from the first stage.

1: Save. Inverter saves PLC running state after power failure, including running frequency and running time of break stage.

LED thousand's digit: PLC running time unit

0: Second

1: Minute

The unit only run on PLC stage time definition Validly, PLC operation during deceleration time unit selection is determined by P0.16.

Note:

- PLC for a certain period of time setting 0, means the stage is invalid.
- Through the terminal, PLC process can be suspended, failure, operation control, refer to group P4 terminal related functional parameter group.

Func Code	Name	Range	Min Unit	Factory Default	Modify
P8.01	Stage 1 setting	000～621	1	000	○
P8.02	Stage 1 running time	0.1～6000.0	0.1	10.0	○
P8.03	Stage 2 setting	000～621	1	000	○
P8.04	Stage 2 running time	0.1～6000.0	0.1	10.0	○
P8.05	Stage 3 setting	000～621	1	000	○
P8.06	Stage 3 running time	0.1～6000.0	0.1	10.0	○
P8.07	Stage 4 setting	000～621	1	000	○
P8.08	Stage 4 running time	0.1～6000.0	0.1	10.0	○
P8.09	Stage 5 setting	000～621	1	000	○
P8.10	Stage 5 running time	0.1～6000.0	0.1	10.0	○
P8.11	Stage 6 setting	000～621	1	000	○
P8.12	Stage 6 running time	0.1～6000.0	0.1	10.0	○
P8.13	Stage 7 setting	000～621	1	000	○
P8.14	Stage 7 running time	0.1～6000.0	0.1	10.0	○

Function code P8.01~P8.14 are used to define PLC running frequency, direction, and Acc/Dec time by LED unit's, ten's, hundred's digit as follow.

LED unit ' s digit: start mode
0: Multi-stage frequency i (i=1 7) defined by P3.26-P3.32 1: Freq. defined by P0.01 function code
LED ten ' s digit: running direction selection
0: Forward 1: Reverse 2: Controlled by running command.
LED hundred ' s digit: Acc/Dec time selection
0: Acc/Dec time 1 1: Acc/Dec time 2 2: Acc/Dec time 3 3: Acc/Dec time 4 4: Acc/Dec time 5 5: Acc/Dec time 6 6: Acc/Dec time 7

6.10 Swing Frequency Function Parameter (P9 Group)

Swing frequency running is used in textile, chemical fiber industry, etc., and in application which needs traverse drive and winding. The typical application is shown as Fig.6-45.

The swing frequency process is normally as follow:

Firstly it accelerates to preset swing freq (P9.02) in set Acc time and waiting for a while(P9.03), then after goes to swing centre frequency in set Acc/Dec time , finally it enters into swing freq cycle running in set swing amplitude(P9.04),Kick freq (P9.05), swing freq cycle (P9.06) and delta wave ascent time (P9.07) until receiving stop command to stop in set Dec time.

The swing centre frequency comes from set frequency of normal running, multistage speed running or PLC running.

The swing freq running will be invalid automatically as JOG running or close loop running mode starts.

When PLC running with swing freq, swing frequency will be invalid during switching of PLC stage. It will go to PLC set frequency according to PLC Acc/Dec setting, then swing frequency restarts.When stopping command is received, it will decelerate to stop in PLC Dec time.

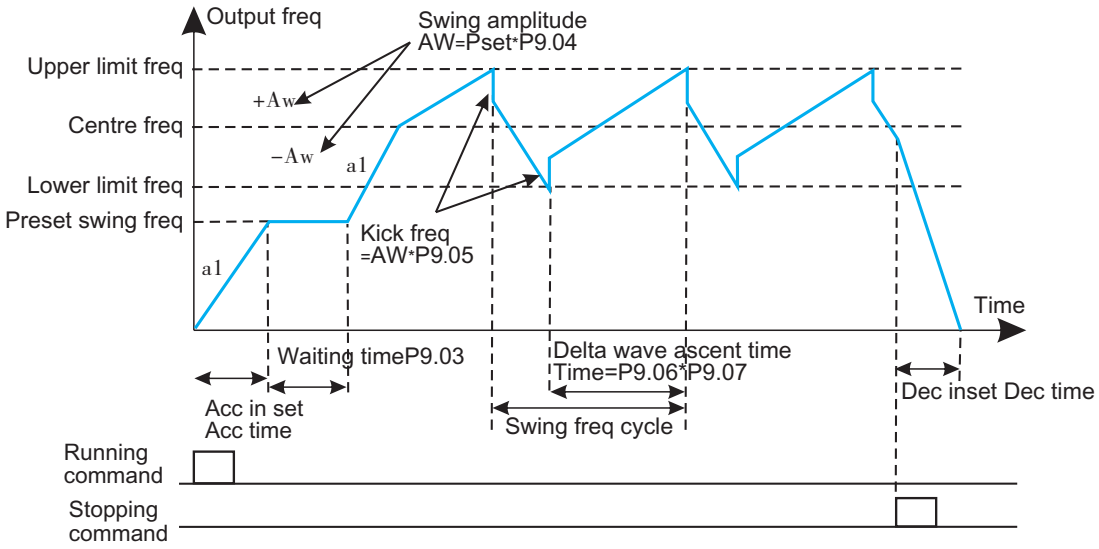

Fig.6-38 Swing frequency running

Func Code	Name	Range	Min Unit	Factory Default	Modify
P9.00	Swing freq. selection	0～1	1	0	×

0 : Inaction

1 : Action

Func Code	Name	Range	Min Unit	Factory Default	Modify
P9.00	Swing freq. running mode	0～1	1	0	×

After inspecting cable connection and power source for sure, switch on inverter input AC power switch. The inverter's LED on control panel will display dynamic start menu. When it displays set frequency, it means initialization has been completed :

Func Code	Name	Range	Min Unit	Factory Default	Modify
P9.01	Swing freq. running mode	0000～1111	1111	0000	×

LED unit ' s digit: start mode
0: Auto start. It keeps running at preset swing frequency(P9.02) for a while(P9.03) after start, then after automatically enters into swing frequency running state. 1: Manual start by terminal. When multifunctional terminal is valid (Xi),it enters into swing frequency running state. When terminal isinvalid, it quits from swing frequency running and keeps running at preset swing frequency(P9.02).
LED ten ' s digit: swing amplitude control
0: Variable swing amplitude. Swing amplitude AW changes according to centre freq, refer to P9.04. 1: Fixed swing amplitude. Swing amplitude AW is defined by max frequency and function code P9.04

Func Code	Name	Range	Min Unit	Factory Default	Modify
P9.02	Preset swing freq.	0.00～500.00Hz	0.01Hz 0.1s	0.00Hz	○
P9.03	Preset swing freq. waiting time	0.0～3600.0s	0.1s	0.0s	○

P9.02 is used for defining the running freq before swing freq running state. When auto start mode is selected, P9.03 is used for defining the duration of running at preset swing frequency. When manual start mode is selected, P9.03 is invalid. Refer to Fig.6-38.

Func Code	Name	Range	Min Unit	Factory Default	Modify
P9.04	Swing amplitude	0.0～50.0%	0.1%	0.0%	○

Variable swing amplitude:
AW=centre freq ×P9.04 Fixed swing amplitude:
AW=max running freq P0.06 ×P9.04.

Note:

✦ Swing freq is restricted by upper/lower limit frequency.

Func Code	Name	Range	Min Unit	Factory Default	Modify
P9.05	Kick freq.	0.0～50.0%	0.1%	0.0%	○

P9.05=0, there is no kick freq.

Func Code	Name	Range	Min Unit	Factory Default	Modify
P9.06	Swing freq. cycle	0.1～999.9s	0.1s	10.0s	○

This function code is to define the time of a completed cycle of swing freq running.

Func Code	Name	Range	Min Unit	Factory Default	Modify
P9.07	delta wave ascent time	0.0～98.0%	0.1%	50.0%	○

Swing freq ascent stage running time=P9.06 P9.07 (second), Descent stage running time=P9.06 (1 P9.07) (second).

Note:

✦ User can select S curve Acc/Dec mode at the same time when swing frequency running is selected. It can make swing freq running smooth.

Func Code	Name	Range	Min Unit	Factory Default	Modify
P9.08	Terminal UP/DOWN and Fan control selection	000～111	1	0	○

Unite digit
0: Inverter fan operation, shutdown after 1 minutes after the fan stops running; 1: Power on the fan operation.
Ten digit
0: When Frequency is set by Terminal UP/DOWN (P0 .01=3), inverter will save the frequency value after power off. When inverter restarts, the initial frequency will be the last saving frequency; 1: When Frequency is set by Terminal UP/DOWN (P0 .01=3), inverter will not save the frequency value after power off. The Intial frequency setting is 0HZ.
Hundred digit
0: Inverter run/ stop is set by Terminal (P0.03=1). After power cut off and switch on, inverter will run or stop according to Terminal setting. 1: Inverter run/ stop is set by Terminal (P0.03=1). After power cut off and switch on, inverter will stop.

Func Code	Name	Range	Min Unit	Factory Default	Modify
P9.09	Muti-function terminal filtering time	0～4	1	1	○

The parameter is used for multi-function terminals (X1-X8) signal filtering. Increasing the value, the effect of filtering will be improved, but the Terminal response time will be longer. Reducing the value, the effect of filtering will get worse and Terminal response time is short. In some motion control application which requires instant action, parameter P9.09 should set 0.

Func Code	Name	Range	Min Unit	Factory Default	Modify
P9.10	Braking unit use rate	0～100.0%	0.1%	30.0%	○

This parameter is used to set the energy consumption braking unit switching value. When the bus voltage in excess of P9.11 (energy consumption braking bus bar voltage), braking unit will start the brake unit according to the percentage of P9.10. The high percentage setting, the braking effect is obvious and the braking current will be high. Users have to set the appropriate adjustment of P9.10 parameters and select the braking resistor.

Func Code	Name	Range	Min Unit	Factory Default	Modify
P9.11	Overpressure threshold value	0～780V	1V	780V	○
P9.12	Energy consumption braking bus bar voltage	0～780V	1V	640V Or 358V	○

This parameter is used to set the energy consumption braking start bus voltage. Three-phase 380V inverter power brake boot bus voltage is 660V, single-phase 220V inverter power brake boot bus voltage is 358V.

Func Code	Name	Range	Min Unit	Factory Default	Modify
P9.13	G/P type setting and single-phase motor type selection	0000～1111	0000	0000	○

Unit's digit:
0: G type
1:P type
Ten's digit: reserved
Hundred's digit: reserved
Thousand's digit: Singlephase
motor type:
0: ordinary three-phase asynchronous motor(220V)
1: single-phase asynchronous motor(removing capacitor)
2: Single-phase asynchronous motor(without removing the capacitor)

Func Code	Name	Range	Min Unit	Factory Default	Modify
P9.14	User password	1～9999	1	0	○

This function is used for prohibiting non-authorized personnel to view and amend the function parameter. When P9.14=0000, this function is invalid.

When this function is needed, please enter 4 digits as password, then after press ENTER/DATA key to confirm it, the password will be Valid immediately.

Amend password: press MENU/ESC key to enter into password verification state. After original 4 digits password is entered correctly, it goes to parameter edit state. Select function code P9.14 (P9.14=0000 now), enter a new password, and press ENTER/DATA key to confirm it, the new password will be Valid immediately. The super user password is 2644.

6.11 Vector Control Parameter (PA Group)

Func Code	Name	Range	Min Unit	Factory Default	Modify
PA.00	Motor parameter Auto tuning function	0～1	1	0	×

0：Inaction

1：Static auto-tuning

When settings PA.00=1, inverter show "FUN0 ", then press " FWD " key to start inverter parameter auto-tuning. When keyboard display " FUN1 ", auto tuning is complete.

Func Code	Name	Range	Min Unit	Factory Default	Modify
PA.01	Motor rated voltage	0～400V	1	depends on model type	×
PA.02	Motor rated current	0.01～500.00A	0.01A	depends on model type	×
PA.03	Motor rated frequency	1～500Hz	1Hz	depends on model type	×
PA.04	Motor rated rotating speed	1～9999 r/min	1r/min	depends on model type	×
PA.05	Motor poles number	2～16	1	depends on model type	×
PA.06	Motor stator inductance	0.1～5000.0mH	0.1mH	depends on model type	×
PA.07	Motor rotor inductance	0.1～5000.0mH	0.1mH	depends on model type	×
PA.08	Motor stator and rotor mutual inductance	0.1～5000.0mH	0.1mH	depends on model type	×
PA.09	Motor stator resistance	0.001～50.000Ω	0.001Ω	depends on model type	×
PA.10	Motor rotor resistance	0.001～50.000Ω	0.001Ω	depends on model type	×

PA.01~PA.10 are defined as motor parameter. The inverter has its own factory default set parameter which depends on model type. User is able to reset above parameter according to parameter of motor used. These parameter should be entered correctly, otherwise, the vector control function can’t achieve desired control effect.

Func Code	Name	Range	Min Unit	Factory Default	Modify
PA.11	Over current protection coefficient of torque current	0～15	1	15	×

In vector control mode, this function is used for controlling torque current as to prevent over current .The range of 0-15 correspond to 50%-200%.

Func Code	Name	Range	Min Unit	Factory Default	Modify
PA.12	Proportion adjustment coefficient of speed deviation	50～120	1	85	×
PA.13	Integral adjustment coefficient F speed deviation	100～500	1	360	×

In vector control mode, PA.12~PA.13 are used for controlling motor rotating speed. It can achieve better motor speed control effect by proper adjustment of these two function parameter.

Func Code	Name	Range	Min Unit	Factory Default	Modify
PA.14	Vector torque boost	100～150	1	100	×

In vector control mode, this function is used to boost output torque of motor.

It can properly increase this parameter in application with heavy load as to boost output torque of motor.

6.12 Factory Function parameter (PF Group)

Func Code	Name	Range	Min Unit	Factory Default	Modify
PF.00	Factory function	0000 - 9999	---	---	×

Factory function, user no need to amend it.

7.1 Fault Alarm and Troubleshooting

When a fault occurs, the drive displays a fault code, operates the fault relay and stops output. The motor may coast to a stop. Record the fault and operating conditions, then use Table 7-1 to identify the cause. Isolate power before inspecting wiring or components. Contact Larson Electronics if assistance is needed.

Fault code	Type of faults	Possible fault reasons	Troubleshooting
E-01	Acc over current	Acc time is too short	Adjust acc time
		V/F curve setup is not suitable	Adjust V/F curve
		Restart the motor in running	Setup start mode as speed tracking restart
		Torque boost setup is too big	Adjust torque boost or set as auto mode
		Inverter capacity is too low	Select inverter with proper capacity
E-02	Dec over current	Dec time is too short	Adjust Dec time
		Potential load or load inertia is too big	Add suitable braking device
		Inverter capacity is too low	Select inverter with proper capacity
E-03	Over current at constant speed running	Load mutation	Check load
		Acc or Dec timeis too short	Adjust Acc or Dec time
		Input voltage abnormal	Check input power supply
		Load abnormal	check load
		Inverter capacity is too low	Select inverter with proper capacity
E-04	Acc overvoltage	Input voltage abnormal	Check input power supply
		Acc time is too short	Adjust Acc time
		Restart the motor in running	Setup start mode as speed tracking restart
E-05	Dec overvoltage	Dec time is too short	Adjust the Dec time
		Potential load or load inertia is too big	Add suitable braking device
E-06	Overvoltage at constant speed running	Input voltage abnormal	Check input power supply
		Acc or Dec time is too short	Adjust the Acc or Dec time
		Abnormal change of input voltage	Mount input reactor

Fault code	Type of faults	Possible fault reasons	Troubleshooting
E-06		Load inertia is too big	Add suitable braking device
E-07	Overvoltage of control power supply	Input voltage abnormal	Check input power supply
E-08	Inverter overheat	Air duct obstruction	Clean air duct
		Environment temperature is too high	Improve the ventilation or decrease the carrier frequency
		Fan damaged	Replace a new fan
		Inverter module abnormal	Contact Larson
E-09	Inverter overload	Acc time is too short	Adjust Acc time
		DC braking value is too high	Decrease DC braking current and increase braking time
		V/F curve setup is not suitable	Adjust V/F curve
		Restart the motor in running	Setup start mode as speed tracking restart
		Mains voltage is too low	Check mains voltage
		Too heavy load	Select inverter with proper capacity
E-10	Motor overload	V/F curve setup is not suitable	Adjust V/F curve
		Mains voltage is too low	Check mains voltage
		General motor runs at low speed with heavy load for long term	Use a special motor for long term running
		Wrong setting of motor overload protection factor	Set the factor right
		Motor chocked or sudden change of load	Check load
E-11	Under voltage in running	Mains voltage is too low	Check mains voltage
E-12	Inverter module protection	Inverter over current	Refer to over current troubleshooting
		Output 3-phase fault or ground short	Re-wiring
		Air duct obstruction or fan damaged	Clean air duct or replace a new fan

Fault code	Type of faults	Possible fault reasons	Troubleshooting
E-12	Inverter module protection	Environment temperature too high	Decrease environment temperature
		Control board connecting wire or plug-in unit loose	Check and re-wiring
		Current waveform abnormal due to output missing phase, etc.	Check wiring
		Auxiliary power damaged, or driving voltage under voltage	Contact Larson
		Control board abnormity	Contact Larson
E-13	Peripheral fault	Close external fault terminals	Check the reason
E-14	Current detecting circuit fault	Loose wiring or terminal connections	Check and re-wiring
		Auxiliary power source damaged	Contact Larson
		Hall component damaged	Contact Larson
		Abnormal amplifier circuit	Contact Larson
E-15	RS232/485 Communication fault	Wrong baud rate setting	Set baud rate properly
		Serial port communication fault	Press STOP Key to reset or Contact Larson
		Improper fault alarm parameter setting	Revise function code P3.09~P3.12
		Upper computer doesn't work	Check upper computer and connecting cable
E-16	System interference	Serious interference	Press STOP key to reset or install input power source filter
		DSP read/write error	Reset or Contact Larson
E-17	EP^2PPROM error	Read/write error of control parameter	press STOP key to reset or install input power source filter
E-18	Motor parameter over current fault	Power range of Motor and inverter do not match	Contact Larson press STOP key to reset
E-19	Input phase loss protection	One of R, S, T port has no voltage	Press STOP key to reset check voltage of R, S, T
E-20	over current fault when restart	Over current when inverter restart and check speed	press STOP key to reset adjust relevant parameters

Fault code	Type of faults	Possible fault reasons	Troubleshooting
E-31	PID feedback disconnected failure	PID external signal feedback disconnected	Check external wiring and signals
E-53	Pump water shortage protection failure	Water pump idling protection	Check the pump for water shortage or check Whether P9.04 / P9.06 related parameter settings are appropriate

7.2 Fault Record Search

This series inverter record the fault codes occurred in the last 6times and inverter running parameter when last fault occurred. The fault information is saved in P6 group.

7.3 Fault Reset

- When fault occurred, please select the following methods to recover:
- When fault code is displayed, after ensure it can be reset, press STOP key to reset.
- Set any one of X1~X8 terminal as external RESET input (P4.00~P4.07=17).
- Cut off power.

ATTENTION

- Reset the inverter after thoroughly investigating the cause of fault and clearing, otherwise, the inverter may be damaged;
- If it can't be reseted or fault occurs again after reset, please check the cause of fault, continuous reset may damage inverter;
- Reset the inverter after waiting for 5min when overload or overheat protection occurs.

8 Preservation and maintenance

8.1 Routine inspection

Aging, wear, dust, temperature and humidity can affect the drive and motor. Establish an inspection schedule suitable for the operating environment and duty. Before starting, check for abnormal vibration, noise, heat, ambient conditions, current readings and cooling-fan operation.

> **DANGER - STORED ENERGY**
>
> Only qualified personnel may perform internal inspection or service. Isolate and lock out all sources, wait at least 10 minutes, then verify DC bus voltage below 36 V and absence of hazardous voltage. A dark power indicator does not prove the equipment is safe.

8.2 Periodic maintenance

Item	Inspection / action
Main and control terminals	Check for looseness, damage and heating. Tighten to the torque specified for the actual terminal.
Heatsink and air paths	Check for contamination and blockage. Clean using methods suitable for electrical equipment.
Control boards / power components	Inspect for dust, corrosion, damage, discoloration and unusual odor. Do not touch sensitive components unnecessarily.
Cooling fans	Check rotation, airflow, vibration and noise. Replace defective fans with approved parts.
Electrolytic capacitors	Check for leakage, swelling, discoloration or odor. Refer replacement to qualified service personnel.
Motor and cables	Check condition, grounding and signs of overheating. Disconnect the VFD before insulation testing.

Table 8-1. Periodic inspection items.

8.2 Service intervals and storage

Component life depends on temperature, loading, operating hours and contamination. The intervals below are planning guides for an average ambient temperature of 30°C, loading below 80% and operation less than 12 hours per day. Inspect more frequently in demanding service.

Component	Indicative replacement planning interval
Cooling fans	2-3 years
Electrolytic capacitors	4-5 years
Printed circuit board	5-8 years
Fuse	10 years

Table 8-2. Indicative component service intervals. Replace damaged or failed components when identified; do not wait for the planning interval.

Storage and return to service

Store the unit in a dry, protected location within the specified storage temperature range. Prevent dust, moisture and foreign material from entering the unit. Inspect stored equipment before reuse. For prolonged storage, obtain the required capacitor conditioning and return-to-service procedure from Larson Electronics before applying power.

Replacement and service

Use approved replacement parts. After replacing a drive or control assembly, confirm the product ratings, motor data, control source, terminal assignments and protection settings. Carry out the applicable commissioning checks before returning the equipment to normal service.

For assistance, provide the unit model and serial number, motor nameplate data, fault code, operating conditions and relevant parameter settings. Contact Larson Electronics at (877) 348-9680 or sales@larsonelectronics.com.

9 RS485 serial communications

9.1 Communication overview

The RS485 interface supports centralized monitoring and control by a compatible PC or PLC. The drive can operate as a slave; supported drive-to-drive operation can use one drive as master. A compatible remote keypad may also use the communication interface. Confirm the configuration supported by the installed firmware.

9.2 Network and protocol settings

Use a shielded twisted pair and observe 485+ / 485- polarity. Keep communications cables separate from motor and power wiring. Follow the supplied network instructions for termination, shielding and grounding. Each addressed slave must have a unique address.

Setting	Description
Interface	RS485; asynchronous, half-duplex.
Transmission mode	ASCII or RTU, as supported and configured.
Default described by this control platform	ASCII, 9,600 bit/s, 7 data bits, no parity, 2 stop bits. Verify actual P3.09-P3.12 settings.
Master / slave	The master initiates transactions; addressed slaves respond. Broadcast commands do not receive responses.
Addressing	00H is broadcast. 01H is address 1, 0FH is address 15 and 10H is address 16. Use addresses supported by the supplied drive and master.

Match baud rate, transmission mode, parity and stop-bit settings at both ends. A protocol or cable mismatch can cause communication faults. Secure remote run commands before working on the motor or drive.

9.3 Frames and data encoding

ASCII and RTU character formats

Mode	Data bits	Parity / stop bits
ASCII	7	No parity: 2 stop bits; odd/even parity: 1 stop bit.
RTU	8	No parity: 2 stop bits; odd/even parity: 1 stop bit.

Each character starts with one start bit. ASCII encodes each message byte as two hexadecimal characters. RTU transmits binary bytes. In multibyte register values and addresses, the high byte precedes the low byte; the RTU CRC is transmitted low byte first.

ASCII frame

Field	Content
Start	Colon character : (3AH).
Address / function / data	Two hexadecimal ASCII characters for each message byte.
LRC	One checksum byte encoded as two ASCII characters.
End	Carriage return CR (0DH), then line feed LF (0AH).

RTU frame

Field	Content
Start / end	A silent interval separates frames. The drive guidance specifies at least 10 ms; also satisfy the timing required by the configured link.
Address / function / data	Binary message bytes.
CRC	16-bit CRC: low byte followed by high byte.

Use register transactions supported by the drive. Do not exceed the available register count or write unsupported values.

9.3 Read and write examples

03H - Read a register

Read one register at 2104H (output current) from slave 01H. The example response contains a value of 0000H. The response data changes with the measured value; calculate its checksum from the actual response.

Read request

```
ASCII: : 010321040001D6 CR LF

RTU: 01 03 21 04 00 01 CF F7
```

Read response

```
ASCII: : 0103020000FA CR LF

RTU: 01 03 02 00 00 B8 44
```

06H - Write a register

Write P0.02 = 50.00 Hz at parameter address 0002H in slave 01H. With a 0.01 Hz unit, 50.00 Hz is represented by 5000 decimal (1388H). The normal addressed response echoes the write request.

```
ASCII: : 0106000213885C CR LF

RTU: 01 06 00 02 13 88 25 5C
```

> **COMMAND AND RATING CHECK**
>
> Writing a frequency does not by itself select the active command source. Configure the appropriate P0 and P3 settings, and ensure that the requested frequency is within the actual drive and motor limits. Never use a test write to start equipment unexpectedly.

The examples use raw hexadecimal register addresses, not a PLC software package's 4xxxx reference notation. Check any address offset applied by the master.

9.3 Loop test and checksums

08H - Communication loop test

The drive communication loop test returns the received test message to the host. The drive-specific example payload is 0102H, 0304H. Use this function only where supported by the installed firmware; do not assume support for every generic Modbus diagnostic subfunction.

Request and echoed response

```
ASCII: : 010801020304ED CR LF

RTU: 01 08 01 02 03 04 41 04
```

ASCII LRC calculation

Add the binary bytes from the slave address through the last data byte before ASCII encoding. Keep only the low eight bits, take the two's complement, then encode the result as two hexadecimal ASCII characters. Do not include the colon or CR/LF in the calculation.

```
LRC = (-sum(message bytes)) AND FFH
```

RTU CRC calculation

Initialize a 16-bit CRC register to FFFFH. For each message byte, XOR it with the low byte of the CRC. Shift right eight times; on each shift with a least-significant bit of 1, XOR the shifted value with A001H. Send the final CRC low byte first, then high byte.

The receiver recalculates the checksum. A frame with an invalid checksum is discarded without a normal response. Check wiring, settings and noise sources when repeated checksum errors occur.

Reference: Modbus Organization, Modbus over Serial Line Specification and Implementation Guide, V1.02 (modbus.org). The drive-specific register map and supported settings in this manual govern the application.

9.3 Command registers

Address / function	Value	Action
2000H / 06H	0001H	RUN
2000H / 06H	0002H	Forward
2000H / 06H	0003H	Reverse
2000H / 06H	0004H	Jog
2000H / 06H	0005H	Forward jog
2000H / 06H	0006H	Reverse jog
2000H / 06H	0007H	Decelerate and stop
2000H / 06H	0008H	Stop
2000H / 06H	0009H	Jog stop
2000H / 06H	000AH	Reset
2001H / 06H	Frequency value	Frequency setting; use the scale and limits applicable to the configured drive.

Parameter register access

Use 03H to read and 06H to write supported function parameters. The address is GGnnH, where GG identifies the parameter group and nn identifies the parameter within that group. For example, P0.02 is addressed as 0002H. Interpret values using the units and resolution in Section 5.

> **REMOTE START / RESET**
>
> A communication command can start, reverse or reset the drive. Keep personnel clear, verify the active command source and establish the required machine interlocks before enabling remote control.

9.3 Monitoring registers

Address	Read with 03H
2100H	Error code
2101H	Drive state word; see state bits on the following page.
2102H	Frequency setting
2103H	Output frequency
2104H	Output current
2105H	DC bus voltage
2106H	Output voltage
2107H	Motor speed
2108H	Module temperature
2109H	VI analog input
210AH	CI analog input
210BH	Software version
210CH	Terminal status
210DH	Set pressure
210EH	Feedback pressure

Read-only values reflect the supported firmware and configured functions. Confirm units and scaling against the corresponding keypad monitoring values before using them in a supervisory display or control calculation.

9.3 Status bits and errors

Drive state word at 2101H

Bit	0	1
0	Stopped	Running
1	Voltage normal	Undervoltage
2	Forward	Reverse
3	Not jogging	Jogging
4	Closed-loop control inactive	Closed-loop control active
5	Swing frequency inactive	Swing frequency active
6	PLC operation inactive	PLC operation active
7	Terminal multistage speed inactive	Terminal multistage speed active
8	Normal-running flag inactive	Normal-running flag active
9	Frequency not from communications	Frequency from communications
10	Frequency not from analog input	Frequency from analog input
11	Run command not from communications	Run command from communications
12	Parameter password protection inactive	Parameter password protection active

Communication error codes

Code	Description
01H	Unsupported or unrecognized function code.
02H	Unrecognized or invalid register address.
03H	Invalid data or a value outside the permitted range.

A Installation and service record

Record the information from the actual unit and motor. Keep this record with the equipment and update it after approved changes.

Item	Installation record
VFD model / serial number	
Input voltage / phase / frequency	
Rated input current	
Rated output voltage / current	
Motor model / nameplate data	
Motor voltage / current / frequency	
Motor speed / power	
Control mode / run command source	
Frequency command source / limits	
Acceleration / deceleration settings	
Protection / restart settings	
Commissioning date / technician	

Technical assistance

These instructions may not cover every variation or installation requirement. For additional information or approved replacement parts, contact Larson Electronics.

Larson Electronics, LLC
Phone: (877) 348-9680 | Fax: (903) 498-3364
Email: sales@larsonelectronics.com
www.larsonelectronics.com